YAESU
The radio

HF/50 MHz Transceiver

FTDX1200

Technical Supplement

©2015 YAESU MUSEN CO., LTD.

YAESU MUSEN CO., LTD.
Tennozu Parkside Building
2-5-8 Higashi-Shinagawa, Shinagawa-ku, Tokyo 140-0002 Japan
YAESU USA
6125 Phyllis Drive, Cypress, CA 90630, U.S.A.
YAESU UK
Unit 12, Sun Valley Business Park, Winnall Close
Winchester, Hampshire, SO23 0LB, U.K.

EH058H90C

Introduction

This manual provides technical information necessary for servicing the FTDX1200 HF/50 MHz Transceiver.
Servicing this equipment requires expertise in handling surface-mount chip components. Attempts by non-qualified persons to service this equipment may result in permanent damage not covered by the warranty, and may be illegal in some countries.
Two PCB layout diagrams are provided for each double-sided circuit board in the Transceiver. Each side of is referred to by the type of the majority of components installed on that side ("leaded" or "chip-only"). In most cases one side has only chip components, and the other has either a mixture of both chip and leaded components (trimmers, coils, electrolytic capacitors, ICs, etc.), or leaded components only.
While we believe the technical information in this manual to be correct, YAESU MUSEN assumes no liability for damage that may occur as a result of typographical or other errors that may be present. Your cooperation in pointing out any inconsistencies in the technical information would be appreciated.

Contents

Specifications
Exploded View & Miscellaneous Parts
Block Diagram
Connection Diagram
Alignment
Board Unit (Schematics, Layouts & Parts)
- MAIN Unit
- CNTL Unit
- LOCAL Unit
- PA Unit
- TUNER Unit
- DSP Unit
- DISPLAY-1 Unit
- LED Unit
- SW-A Unit
- SW-B Unit
- VR-A Unit
- JACK Unit
- MIC Unit

Important Note

1) This transceiver was assembled using Pb (lead) free solder, based on the RoHS specification.
   Only lead-free solder (Alloy Composition: Sn-3.0Ag-0.5Cu) should be used for repairs performed on this apparatus. The solder stated above utilizes the alloy composition required for compliance with the lead-free specification, and any solder with the above alloy composition may be used.
2) Risk of explosion if battery is replaced by an incorrect type. Dispose of used batteries according to the instructions.

General

Rx Frequency Range:	30 kHz - 56 MHz (operating) 1.8 MHz - 54 MHz (specified performance, Amateur bands only)
Tx Frequency Ranges:	1.8 MHz - 54 MHz (Amateur bands only)
Frequency Stability:	±0.5 ppm (after 1 minute @+14 °F to +140 °F [–10 °C to +60 °C])
Operating Temperature Range:	+14 °F to +122 °F (–10 °C to +50 °C)
Emission Modes:	A1A (CW), A3E (AM), J3E (LSB, USB), F3E (FM), F1B (RTTY), G1B (PSK31)
Frequency Steps:	1/5/10 Hz (SSB, CW, & AM), 100 Hz (FM)
Antenna Impedance:	50 Ohms, unbalanced 16.7 - 150 Ohms, unbalanced (1.8 MHz - 29.7 MHz) 25 - 100 Ohms, unbalanced (50 MHz - 54 MHz) (Tuner ON, 1.8 MHz - 50 MHz Amateur bands, TX only)
Power Consumption (Approx.):	Rx (no signal) 1.8 A Rx (signal present) 2.1 A Tx (100 W) 23 A
Supply Voltage:	DC 13.8 V ± 10% (Negative Ground)
Dimensions (WxHxD):	14.4″ x 4.5″ x 12.3″ (365 x 115 x 312 mm)
Weight (Approx.):	20.9 lbs (9.5 kg)

Transmitter

Power Output:	5 - 100 watts (2 - 25 watts AM carrier)
Modulation Types:	J3E (SSB): Balanced, A3E (AM): Low-Level (Early Stage), F3E (FM): Variable Reactance
Maximum FM Deviation:	±5.0 kHz/±2.5 kHz
Harmonic Radiation:	Better than –50 dB (below 30 MHz) Better than –63 dB (above 30 MHz)
SSB Carrier Suppression:	At least 60 dB below peak output
Undesired Sideband Suppression:	At least 60 dB below peak output
3rd-order IMD:	–31 dB @14 MHz 100 watts PEP
Bandwidth:	3 kHz (LSB/USB), 500 Hz (CW), 6 kHz (AM), 16 kHz (FM)
Audio Response (SSB):	Not more than –6 dB from 300 to 2700 Hz
Microphone Impedance:	600 Ohms (200 to 10 kOhms)

Receiver

Circuit Type: Triple-conversion Superheterodyne

Intermediate Frequencies:
40.455 MHz
455 kHz
30 kHz (SSB, CW, RTTY, PSK31, PACKET)
24 kHz (AM, FM, PACKET-FM)

Sensitivity:
SSB/CW (BW: 2.4 kHz, 10 dB S+N/N)
0.16 μV (1.8 - 30 MHz) (RF AMP 2 "ON")
0.125 μV (50 - 54 MHz) (RF AMP 2 "ON")
AM (BW: 6 kHz, 10 dB S+N/N, 30 % modulation @400 Hz)
2 μV (0.5 - 1.8 MHz) (RF AMP 2 "ON")
2 μV (1.8 - 30 MHz) (RF AMP 2 "ON")
1 μV (50 - 54 MHz) (RF AMP 2 "ON")
FM (BW: 15 kHz, 12 dB SINAD)
0.5 μV (28 - 30 MHz) (RF AMP 2 "ON")
0.35 μV (50 - 54 MHz) (RF AMP 2 "ON")
There is no specification for frequency ranges not listed.

Selectivity (WIDTH: Center):

Mode	–6 dB	–60 dB
CW/RTTY/PSK31	0.5 kHz or better	750 Hz or less
SSB	2.4 kHz or better	3.6 kHz or less
AM	6 kHz or better	15 kHz or less
FM	12 kHz or better	25 kHz or less

Image Rejection:
70 dB or better (1.8 MHz - 28 MHz Amateur bands)
60 dB or better (50 MHz Amateur band)

Maximum Audio Output: 2.5 W into 4 Ohms with 10% THD

Audio Output Impedance: 4 to 8 Ohms (4 Ohms: nominal)

Conducted Radiation: Less than 4 nW

Specifications are subject to change, in the interest of technical improvement, without notice or obligation, and are guaranteed only within the amateur bands.

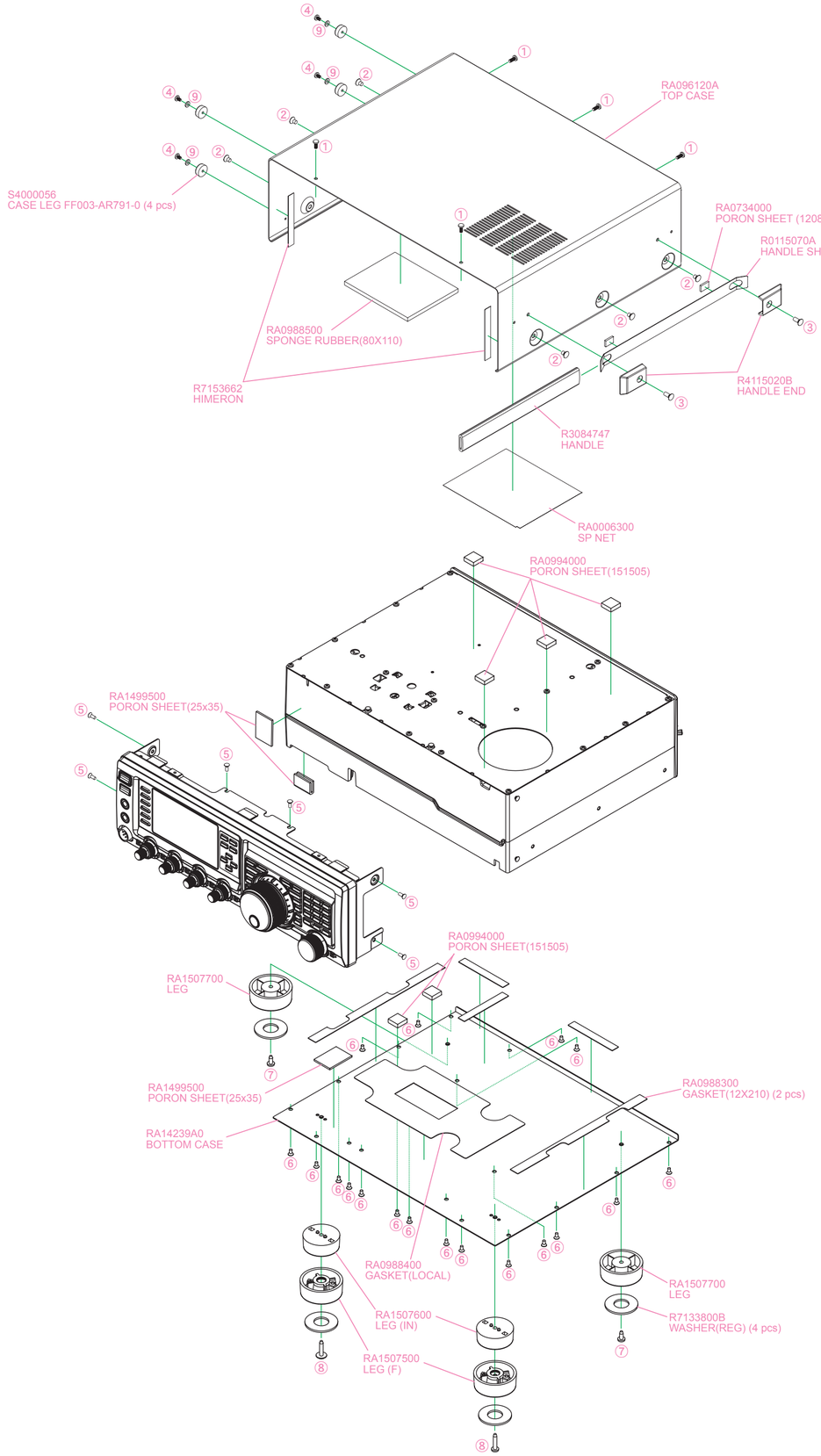

EXPLODED VIEW-1

REF.	YAESU P/N	Description	Qty.
①	U2030807	BINDING HEAD SCREW M3X8B	5
②	U31406007	OVAL HEAD SCREW M4X6B	6
③	U31410020	OVAL HEAD SCREW M4X10SUS	2
④	U25305007	BIND HEAD TAPTITE-S M3X5B	4
⑤	U34308001	FLAT HEAD TAPTITE-B M3X8	6
⑥	U31306007	OVAL HEAD SCREW M3X6B	18
⑦	U24410007	BIND HEAD TAPTITE-B M4X10B	2
⑧	U9900254	SPECIAL SCREW M4X20B(W/WASHER)	2
⑨	U70003007	PLAIN WASHER FW3B	4

Non-designated parts are available only as psrt of a designated assembly.

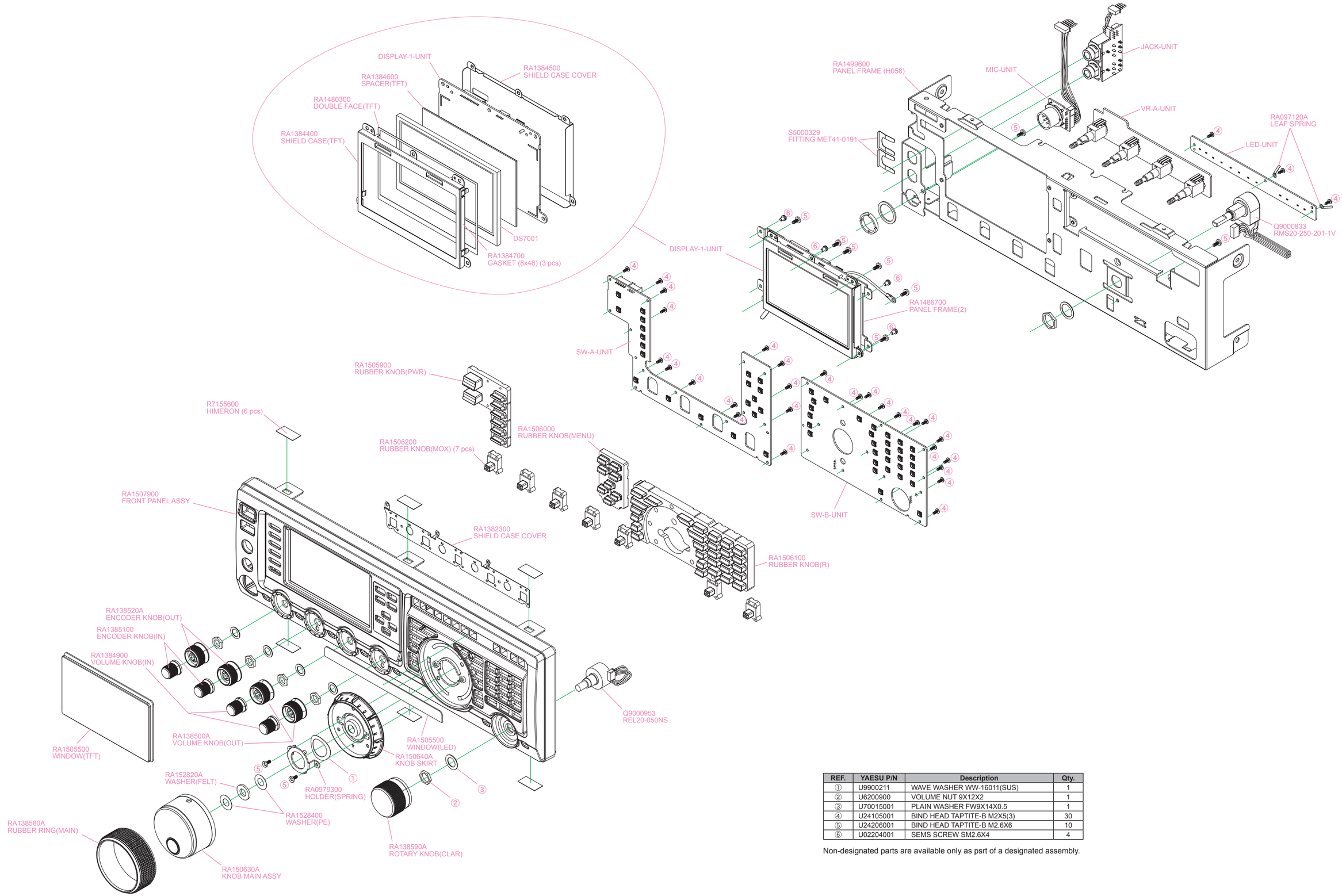

REF.	YAESU P/N	Description	Qty.
①	U9900211	WAVE WASHER WW-16011(SUS)	1
②	U6200900	VOLUME NUT 9X12X2	1
③	U70015001	PLAIN WASHER FW9X14X0.5	1
④	U24105001	BIND HEAD TAPTITE-B M2X5(3)	30
⑤	U24206001	BIND HEAD TAPTITE-B M2.6X6	10
⑥	U02204001	SEMS SCREW SM2.6X4	4

Non-designated parts are available only as psrt of a designated assembly.

EXPLODED VIEW-2

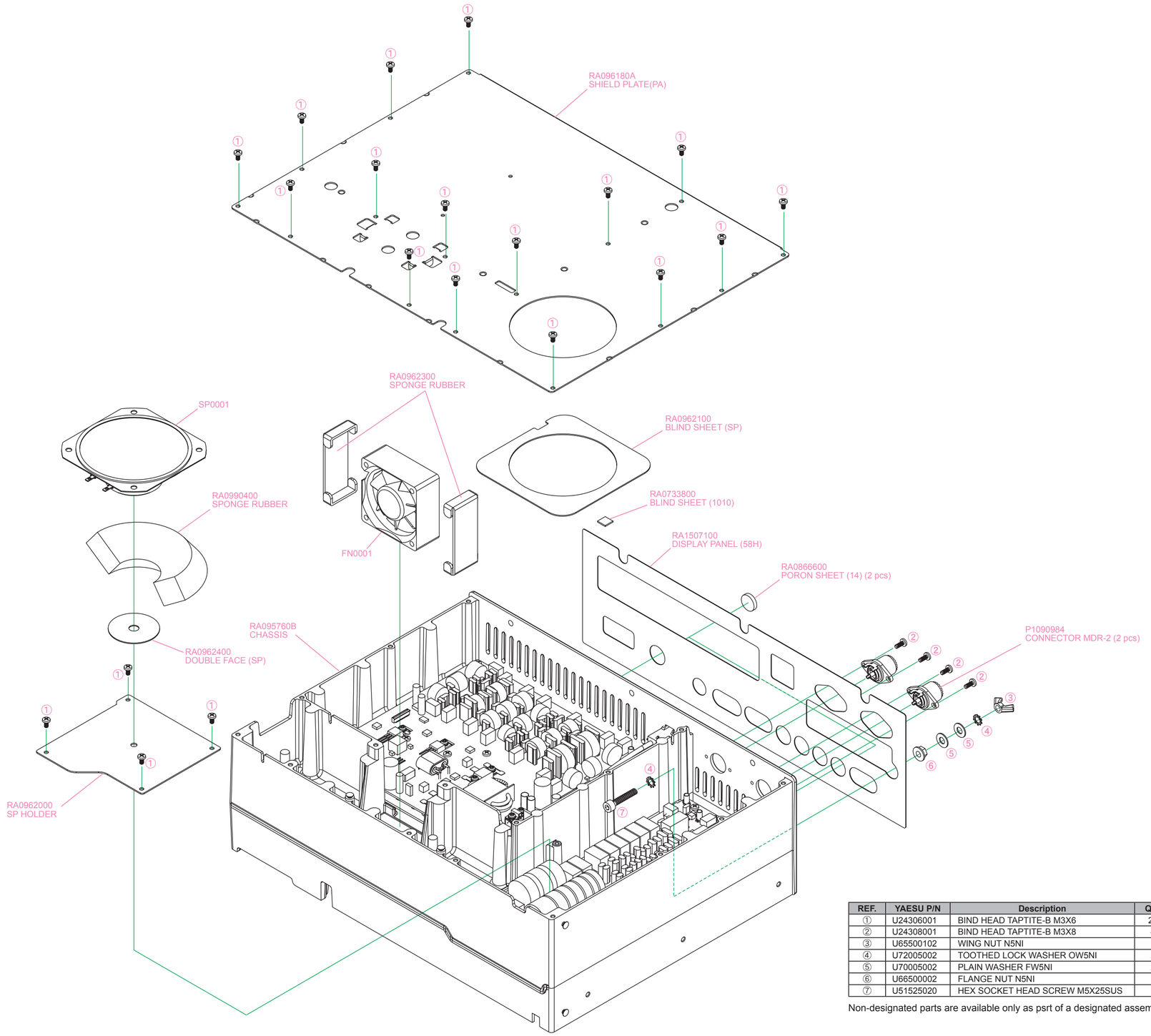

REF.	YAESU P/N	Description	Qty.
①	U24306001	BIND HEAD TAPTITE-B M3X6	20
②	U24308001	BIND HEAD TAPTITE-B M3X8	4
③	U65500102	WING NUT N5NI	1
④	U72005002	TOOTHED LOCK WASHER OW5NI	2
⑤	U70005002	PLAIN WASHER FW5NI	2
⑥	U66500002	FLANGE NUT N5NI	1
⑦	U51525020	HEX SOCKET HEAD SCREW M5X25SUS	1

Non-designated parts are available only as psrt of a designated assembly.

EXPLODED VIEW-3

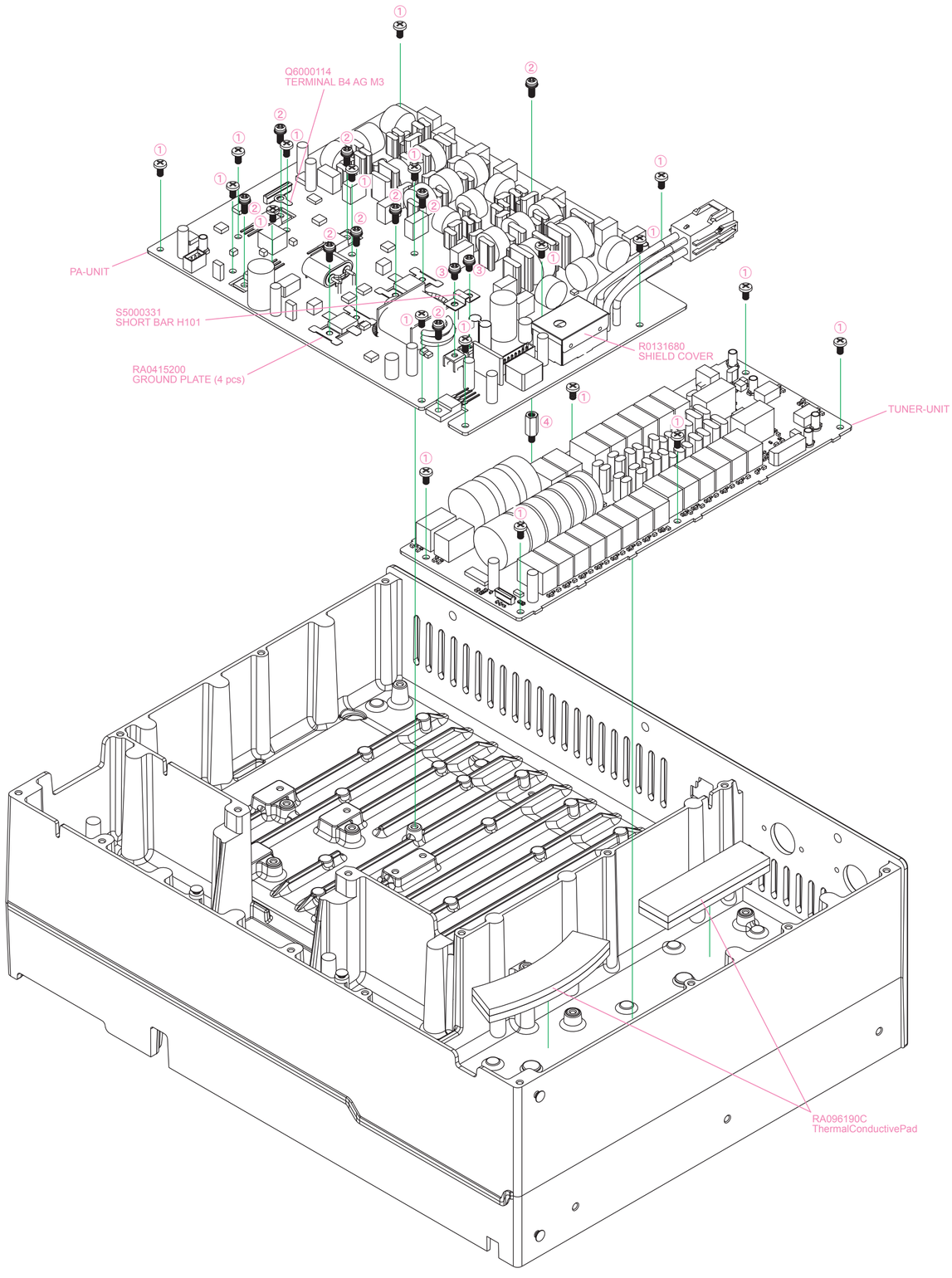

REF.	YAESU P/N	Description	Qty.
①	U24306001	BIND HEAD TAPTITE-B M3X6	19
②	U03308002	SEMS SCREW ASM3X8NI	9
③	U03306002	PAN HEAD SCREW ASM3X6NI	2
④	S5000328	SPACER QBSBE311	1

Non-designated parts are available only as psrt of a designated assembly.

EXPLODED VIEW-4

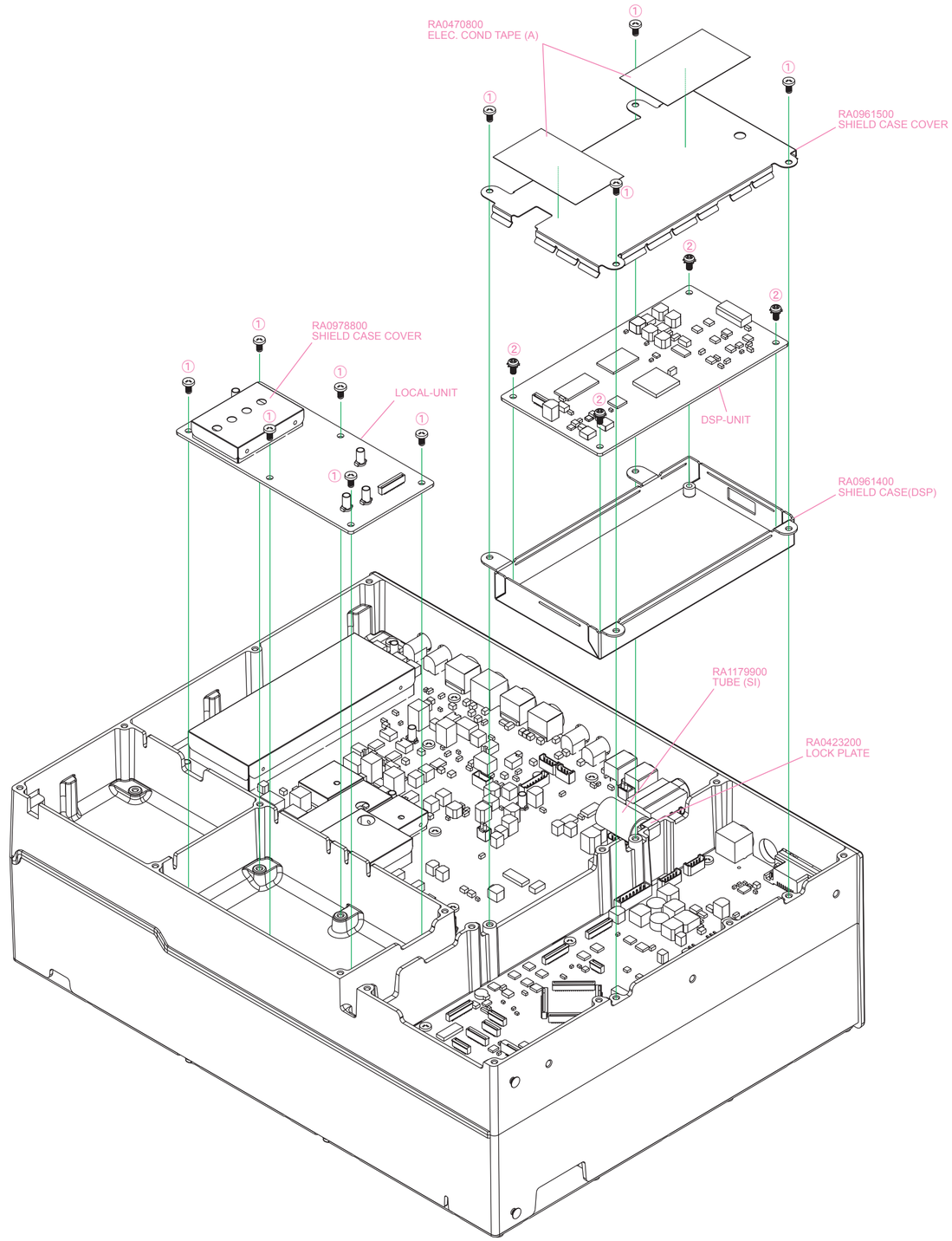

REF.	YAESU P/N	Description	Qty.
①	U24306001	BIND HEAD TAPTITE-B M3X6I	10
②	U06306001	SEMS SCREW OM3X6	4

Non-designated parts are available only as psrt of a designated assembly.

EXPLODED VIEW-5

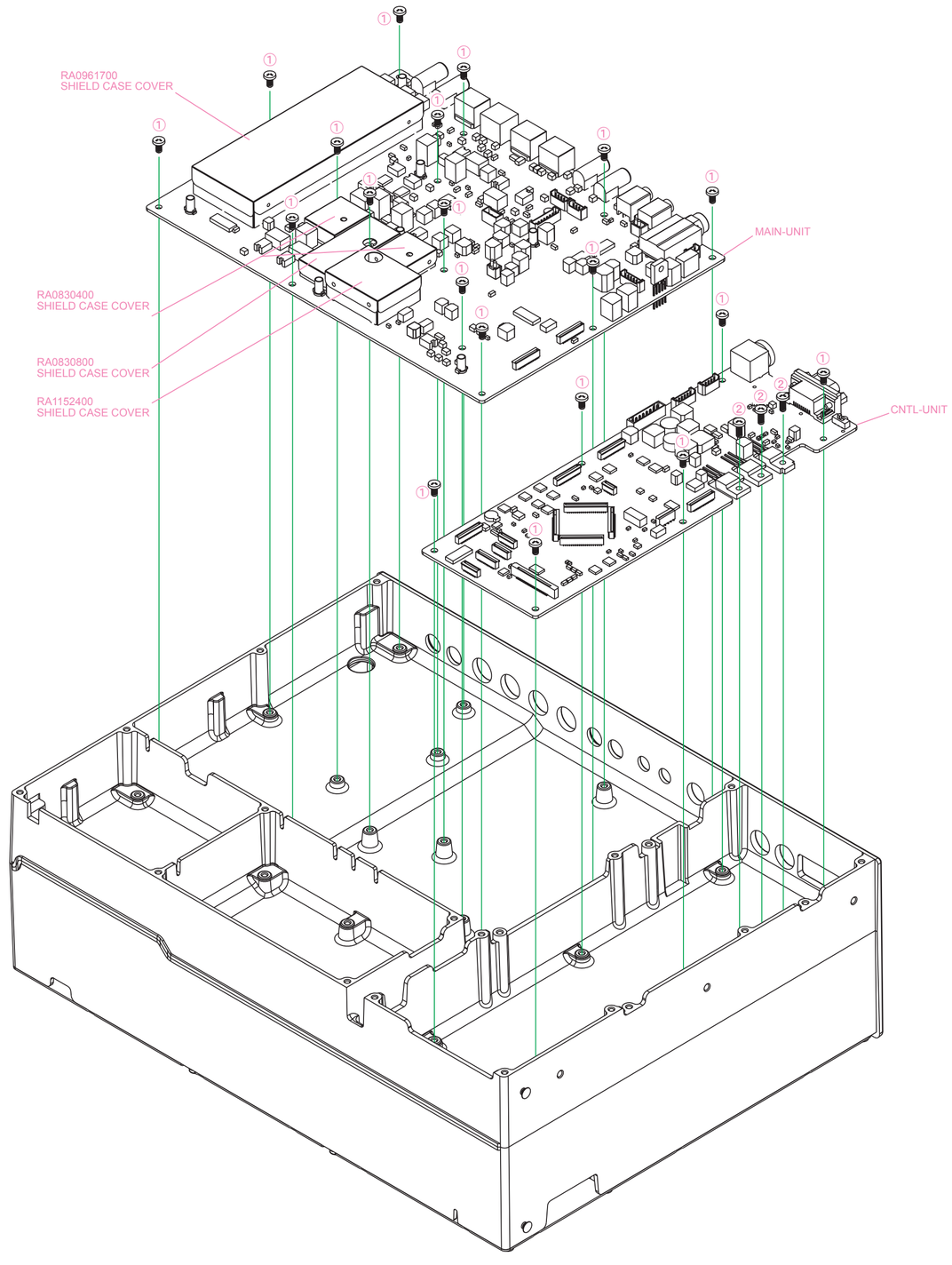

REF.	YAESU P/N	Description	Qty.
①	U24306001	BIND HEAD TAPTITE-B M3X6	20
②	U24308001	BIND HEAD TAPTITE-B M3X8	3

Non-designated parts are available only as psrt of a designated assembly.

EXPLODED VIEW-6

FTDX1200 BLOCK-DIAGRAM

BLOCK DIAGRAM-1

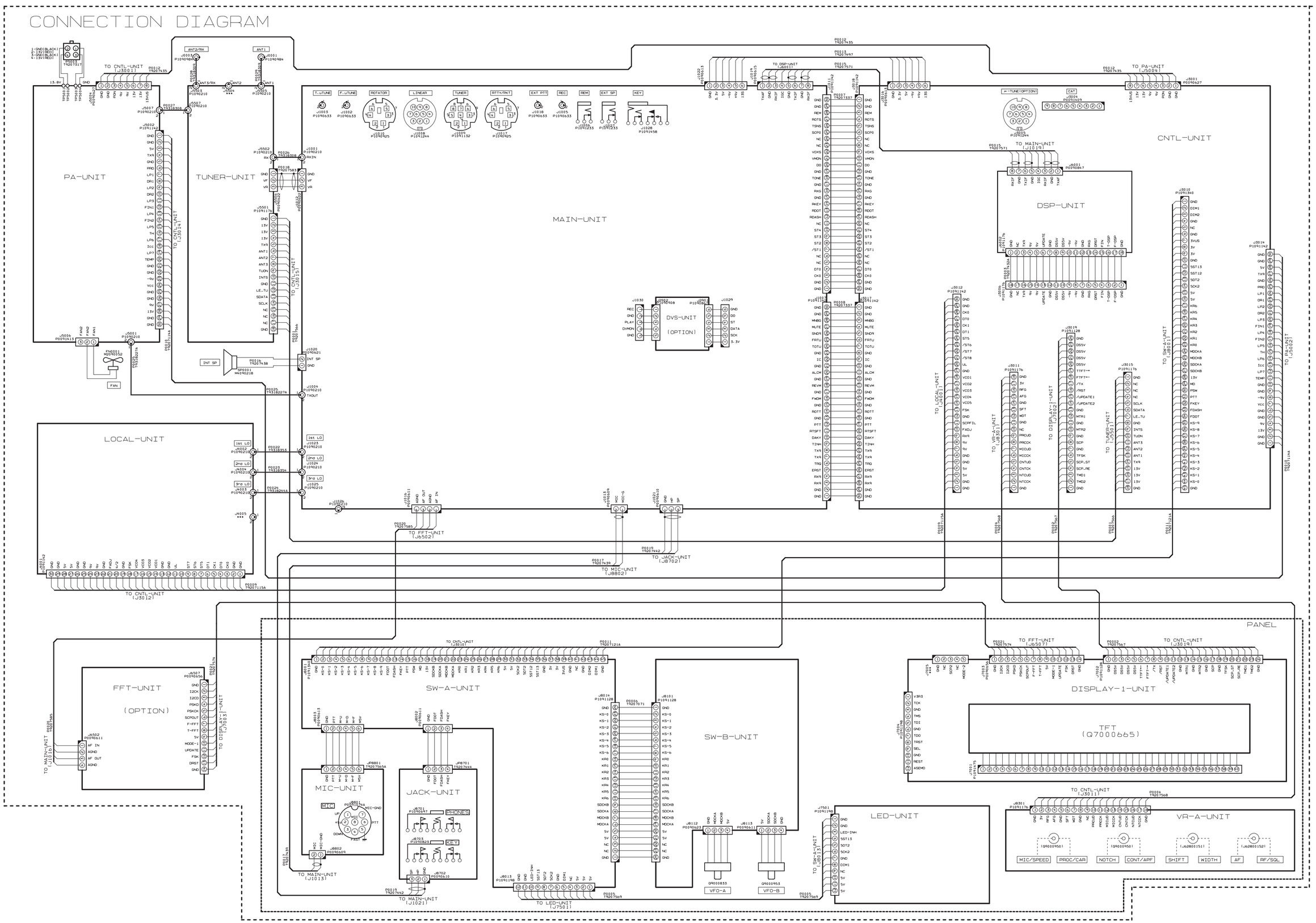

CONNECTION DIAGRAM-1

Introduction and Precautions

The following procedures cover adjustments that are not normally required once the transceiver has left the factory. However, if a problem occurs during normal operation due to component failure; realignment may be required after the faulty components have been replaced.

We recommend that authorized Yaesu Technicians, who are experienced with the circuitry and fully equipped to repair and align our products, perform repairs. If a fault is suspected, contact the selling dealer for instructions regarding repair. Authorized Yaesu Technicians have the latest information to align all circuits and make complete performance checks to ensure compliance with factory specifications after repairs.

Those who do undertake any of the following alignments are cautioned to proceed at their own risk. Problems caused by unauthorized attempts at realignment are not covered by the warranty policy.

Yaesu must reserve the right to change circuits and alignment procedures in the interest of improved performance, without notifying owners.

Under no circumstances should any alignment be attempted unless the normal functions and operation of the transceiver are clearly understood, the cause of the malfunction has been clearly identified and all faulty components replaced. The need for realignment should be determined to be absolutely necessary.

The following test equipment (and a thorough familiarity with its correct use) is necessary for correct realignment. Most steps do not require all of the equipment listed. The interactions of some adjustments may require that more complex adjustments be performed in a sequence. Do not attempt to perform only a single step unless it is clearly isolated electrically from all other steps. Have all test equipment ready before beginning, and follow all of the steps in a section in the order they are presented.

Important Notice
Do not adjust the alignment menus that are not mentioned in this manual.

Required Test Equipment

- ❒ RF Signal Generator
- ❒ AF Signal Generator
- ❒ Spectrum Analyzer good to at least 1 GHz.
- ❒ Frequency Counter
- ❒ SINAD Meter
- ❒ RF Millivoltmeter
- ❒ Electronic Load
- ❒ Digital DC Voltmeter (high-Z, 1 M-Ohm/V)
- ❒ DC Voltmeter
- ❒ DC Ammeter (20 A)
- ❒ Ohmmeter
- ❒ 50-Ohm Dummy Load (100/200 watts)
- ❒ In-Line Wattmeter (150/300 watts, 50-Ohm)
- ❒ Linear Detector
- ❒ RF Coupler
- ❒ 4-Ohm AF Dummy Load (3 watts)
- ❒ 1/4-inch 3-contact Plug

Alignment Preparation & Precautions

A 50-ohm RF Dummy load and in-line wattmeter must be connected to the "ANT 1" jack in all procedures that call for transmission, except where specified otherwise. Correct alignment is not possible with an antenna.

After completing one step, read the following step to determine whether the same test equipment will be required. If not, remove the unneeded test equipment before proceeding. (except the dummy load and wattmeter).

Correct alignment requires that the ambient temperature be maintained constant between 68 °F ~ 86 °F (20 °C ~ 30 °C). When the transceiver is brought into the shop from a hot or cold environment, it should be allowed time to come to room temperature before alignment. Also, the test equipment must be thoroughly warmed up before beginning.

Whenever possible, alignments should be made with oscillator shields and circuit boards firmly affixed in place.

Note: Signal levels in dB referred to in this procedure are based on 0 dBμ = 0.5 μV (closed circuit).

VDD Meter Adjustment

- ❒ Connect the DC voltmeter to pin 6 of J5004 on the PA Unit.
- ❒ Press and hold in the [1.8(1)], [3.5(2)], and [7(3)] keys, while turning the radio on, to enter the alignment mode.
- ❒ Rotate the Main Tuning Dial knob to select the alignment parameter “1-01 VDD MTR”.
- ❒ Press the [ENT] key, then rotate the [VFO-B/CLAR] knob so the VDD meter reading is the same as the reading on the DC voltmeter.
- ❒ Press and hold in the [MENU] button for one second to save the new setting and exit the alignment mode.

TEMP/FAN Adjustment

- ❒ Press and hold in the [1.8(1)], [3.5(2)], and [7(3)] keys, while turning the radio on, to enter the alignment mode.
- ❒ Rotate the Main Tuning Dial knob to select the alignment parameter “1-02 TEMP”.
- ❒ Rotate the [VFO-B/CLAR] knob so the Display Window shows “100”.
- ❒ Rotate the Main Tuning Dial knob to select the alignment parameter “1-03 FAN”.
- ❒ Rotate the [VFO-B/CLAR] knob so the Display Window shows “128”.
- ❒ Press and hold in the [MENU] button for one second to save the new settings and exit the alignment mode.

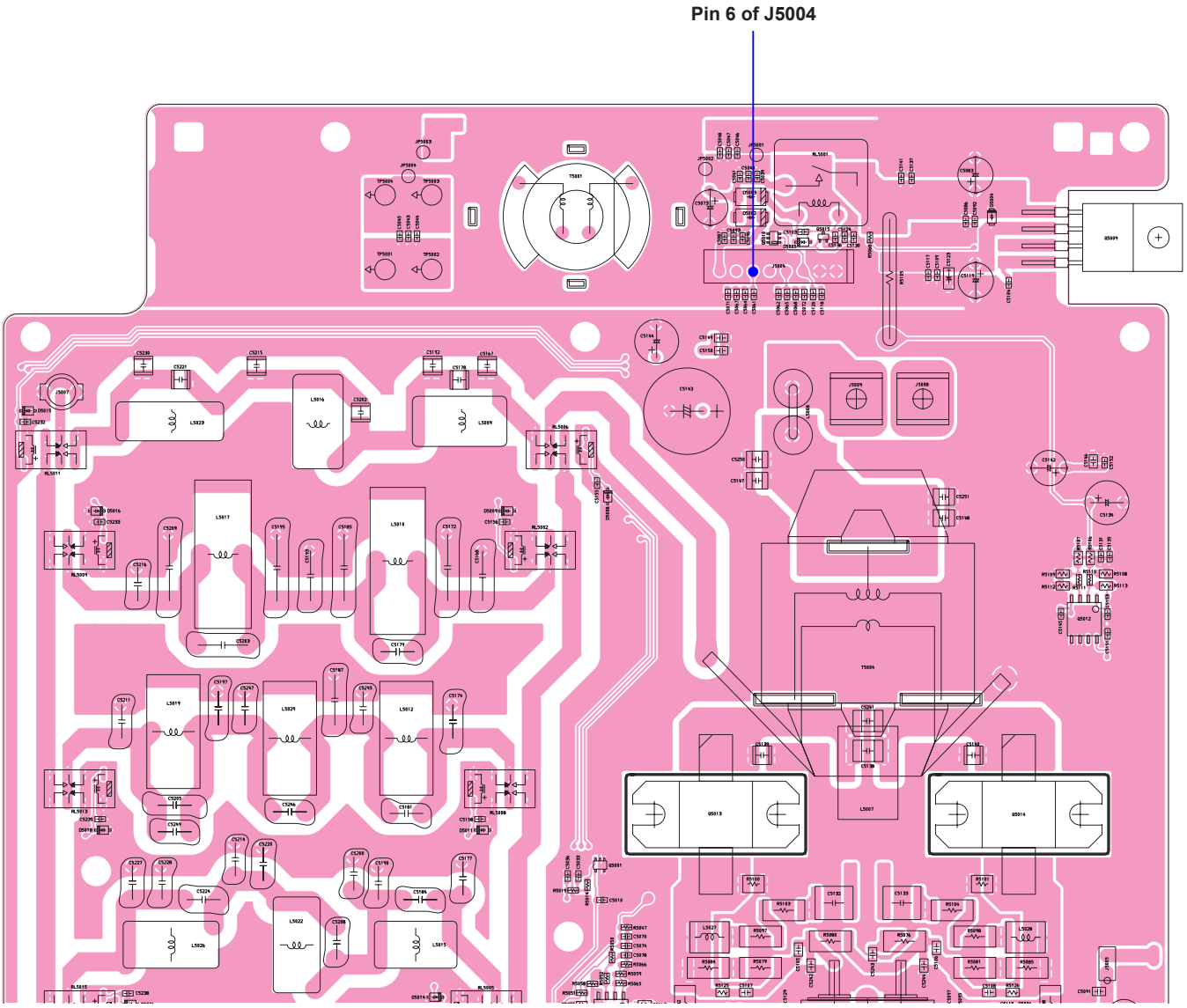

PA Unit Alignment Point

SHIFT/WIDTH Knob

Zero (Center) Adjustment

- ❒ Press and hold in the [1.8(1)], [3.5(2)], and [7(3)] keys, while turning the radio on, to enter the alignment mode.
- ❒ Set the SHIFT/WIDTH knobs to the 12-o'clock-position.
- ❒ Set the operating mode to "USB".
- ❒ Rotate the Main Tuning Dial knob to select the alignment parameter "1-05 SHIFT-CAL".
- ❒ Rotate the [VFO-B/CLAR] knob so the IF SHIFT frequency is set to "±0.00" on the display. The center point (±0.00) is broad. Therefore, set the [VFO-B/CLAR] knob to the center of this broad range.
- ❒ Rotate the Main Tuning Dial knob to select the alignment parameter "1-06 WIDTH-CAL".
- ❒ Rotate the [VFO-B/CLAR] knob so the IF bandwidth is set to "2400" on the external display. The IF bandwidth (2400) is broad. Therefore, set the [VFO-B/CLAR] knob to the center of this broad range.
- ❒ Press and hold in the [MENU] button for one second to save the new settings and exit the alignment mode.

COMP Meter Adjustment

- ❒ Press and hold in the [1.8(1)], [3.5(2)], and [7(3)] keys, while turning the radio on, to enter the alignment mode.
- ❒ Rotate the Main Tuning Dial knob to select the alignment parameter "24-02 COMP-MTR-10dB", then rotate the [VFO-B/CLAR] knob for "10 dB" on the COMP meter.
- ❒ Rotate the Main Tuning Dial knob to select the alignment parameter "24-03 COMP-MTR-20dB", then rotate the [VFO-B/CLAR] knob for "20 dB" on the COMP meter.
- ❒ Rotate the Main Tuning Dial knob to select the alignment parameter "24-04 COMP-MTR-30dB", then rotate the [VFO-B/CLAR] knob so the COMP meter deflects to full scale.
- ❒ Press and hold in the [MENU] button for one second to save the new settings and exit the alignment mode.

2nd/3rd Local Oscillator Adjustment

- ❒ Disconnect the coaxial cable from J4004 on the LOCAL Unit, then connect the RF millivoltmeter to J4004.
- ❒ Confirm that the correct level is present on the RF millivoltmeter (0 dBm +- 3dB).
- ❒ Disconnect the RF millivoltmeter from J4004, then re-connect the RF millivoltmeter to J4004. Disconnect the coaxial cable from J4004 on the LOCAL Unit, then connect the RF millivoltmeter to J4003.
- ❒ Confirm that the correct level is present on the RF millivoltmeter (0 dBm +- 3dB).
- ❒ Disconnect the RF millivoltmeter from J4003, then re-connect the coaxial cable to J4004.

VCO Adjustment

- ❒ Connect the Digital DC voltmeter (high-Z) to TP4005 on the LOCAL Unit.
- ❒ Disconnect the coaxial cable from J4002 on the LOCAL Unit, then connect the RF millivoltmeter to J4002.
- ❒ Press and hold in the [1.8(1)], [3.5(2)], and [7(3)] keys, while turning the radio on, to enter the alignment mode.
- ❒ Referring to the table below, select the appropriate "Alignment Parameter" using the Main Tuning Dial knob per the chart below, and adjust the listed components for the required voltage, or confirm that the correct voltage is present on each alignment parameter.
- ❒ Disconnect the RF millivoltmeter from J4004, then re-connect the coaxial cable to J4004.
- ❒ Press and hold in the [MENU] button for one second to save the new setting and exit the alignment mode.

Alignment Parameter	Adjust / Confirm	DC voltmeter	RF millivoltmeter
1-07 VCO1-H	Adjust TC4004	5.0 V ±0.1 V	At least –10 dBm
1-08 VCO1-L	Confirm	At least 0.6 V	At least –10 dBm
1-09 VCO2-H	Adjust TC4003	5.0 V ±0.1 V	At least –10 dBm
1-10 VCO2-L	Confirm	At least 0.6 V	At least –10 dBm
1-11 VCO3-H	Adjust TC4002	5.0 V ±0.1 V	At least –10 dBm
1-12 VCO3-L	Confirm	At least 0.6 V	At least –10 dBm
1-13 VCO4-H	Adjust TC4001	5.0 V ±0.1 V	At least –10 dBm
1-14 VCO4-L	Confirm	At least 0.6 V	At least –10 dBm

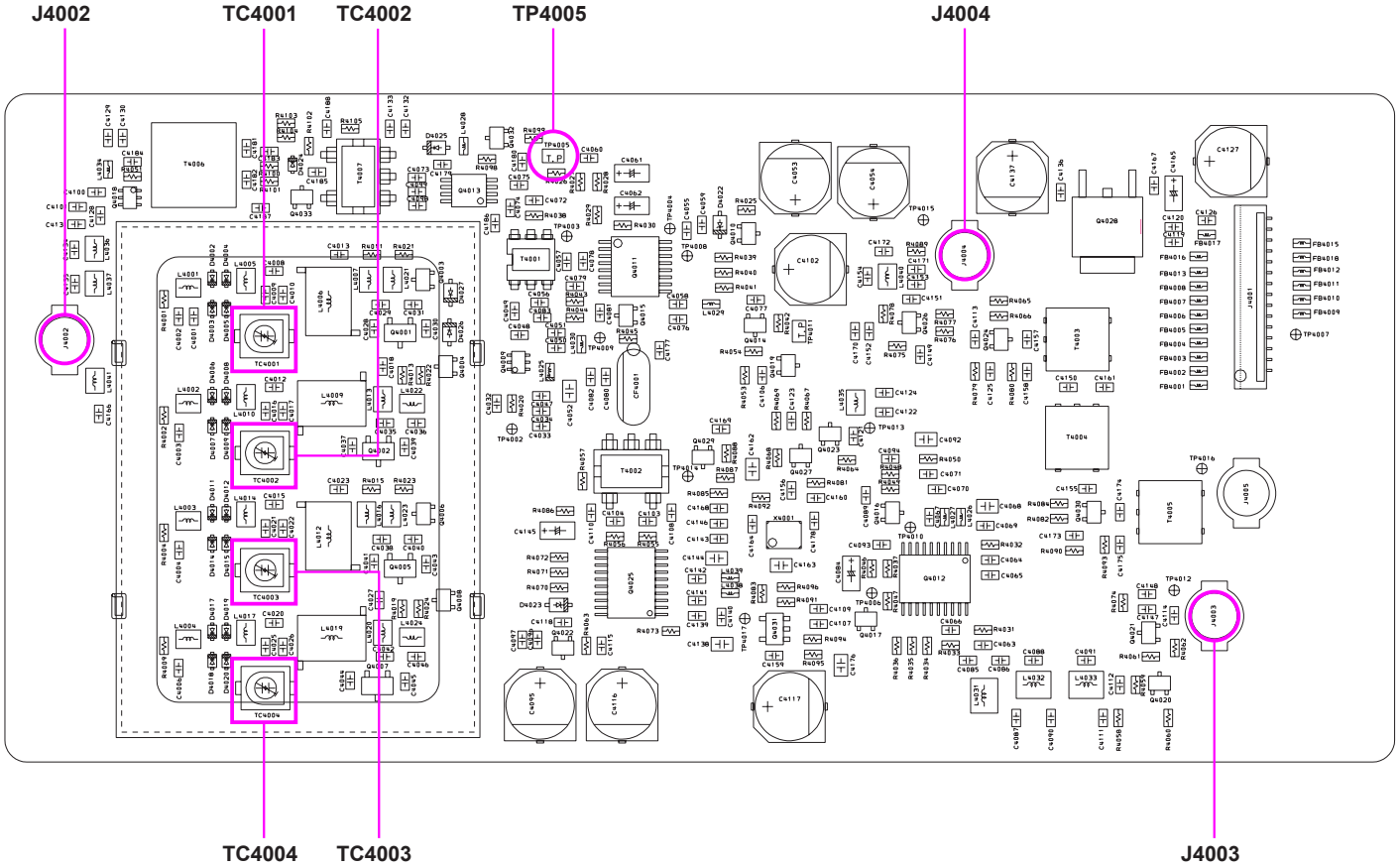

LOCAL Unit Alignment Points

REF OSC Adjustment

- ❒ Disconnect the coaxial cable from J4004 on the LOCAL Unit, then connect the frequency counter to J4004.
- ❒ Press and hold in the [1.8(1)], [3.5(2)], and [7(3)] keys, while turning the radio on, to enter the alignment mode.
- ❒ Rotate the Main Tuning Dial knob to select the alignment parameter "1-04 FREQ".
- ❒ Rotate the [VFO-B/CLAR] knob so that the frequency counter reading is "40.00000 ±5 Hz".
- ❒ Disconnect the frequency counter from J4004, then re-connect the coaxial cable to J4004.
- ❒ Press and hold in the [MENU] button for one second to save the new setting and exit the alignment mode.

1st LO Noise Adjustment

- ❒ Disconnect the coaxial cable from J4004 on the LOCAL Unit, then connect the frequency counter to J4004.
- ❒ Press and hold in the [1.8(1)], [3.5(2)], and [7(3)] keys, while turning the radio on, to enter the alignment mode.
- ❒ Rotate the Main Tuning Dial knob to select the alignment parameter "1-04 FREQ".
- ❒ Rotate the [VFO-B/CLAR] knob so that the frequency counter reading is "40.00000 ±5 Hz".
- ❒ Disconnect the frequency counter from J4004, then re-connect the coaxial cable to J4004.
- ❒ Press and hold in the [MENU] button for one second to save the new setting and exit the alignment mode.

Main Receiver Adjustment

1st Local Oscillator Adjustment

- ❒ Set the following controls as indicated:
  [ANT] : ANT 1
  [IPO] : AMP1
  [ATT] : OFF
  [R.FLT] : AUTO
  [AGC] : AUTO
  [RF GAIN] : Fully clockwise
- ❒ Connect the RF millivoltmeter to TP1042 on the MAIN Unit.
- ❒ Press and hold in the [1.8(1)], [3.5(2)], and [7(3)] keys, while turning the radio on, to enter the alignment mode.
- ❒ Rotate the Main Tuning Dial knob to select the alignment parameter "2-01 Local1.8".
- ❒ Rotate the [VFO-B/CLAR] knob so that the DC voltmeter reading is "0.620 – 0.625 V".
- ❒ Rotate the Main Tuning Dial knob to select the alignment parameter "2-02 Local3.5".
- ❒ Rotate the [VFO-B/CLAR] knob so that the DC voltmeter reading is "0.620 – 0.625 V".
- ❒ Rotate the Main Tuning Dial knob to select the alignment parameter "2-03 Local7".

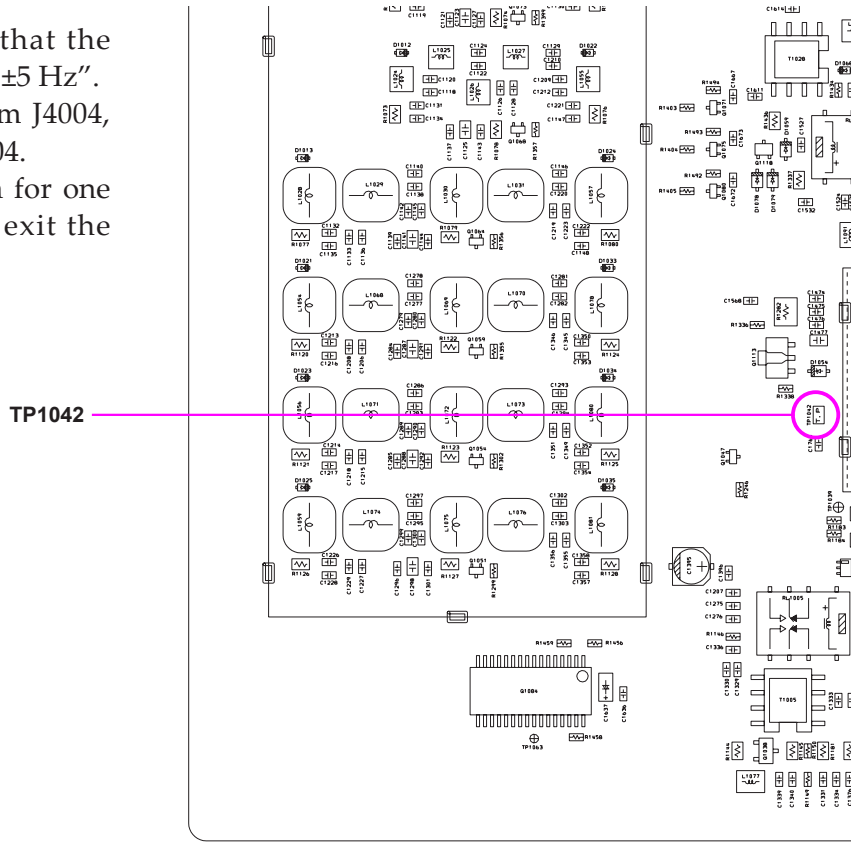

MAIN UNIT (RECEIVER SECTION) ALIGNMENT POINT

- ❒ Rotate the [VFO-B/CLAR] knob so that the DC voltmeter reading is "0.620 – 0.625 V".
- ❒ Rotate the Main Tuning Dial knob to select the alignment parameter "2-04 Local14".
- ❒ Rotate the [VFO-B/CLAR] knob so that the DC voltmeter reading is "0.640 – 0.645 V".
- ❒ Rotate the Main Tuning Dial knob to select the alignment parameter "2-05 Local21".
- ❒ Rotate the [VFO-B/CLAR] knob so that the DC voltmeter reading is "0.620 – 0.625 V".
- ❒ Rotate the Main Tuning Dial knob to select the alignment parameter "2-06 Local28".
- ❒ Rotate the [VFO-B/CLAR] knob so that the DC voltmeter reading is "0.600 – 0.605 V".
- ❒ Rotate the Main Tuning Dial knob to select the alignment parameter "2-07 Local50". (Set the VFO-A frequency to 28.850 MHz.)
- ❒ Rotate the [VFO-B/CLAR] knob so that the DC voltmeter reading is "0.520 – 0.525 V". (Set the VFO-A frequency to 50.500 MHz)
- ❒ Press and hold in the [MENU] button for one second to save the new settings and exit the alignment mode.

2nd Local Level Adjustment

- ❒ Connect the RF millivoltmeter to TP1062 on the MAIN Unit.
- ❒ Adjust T1032 on the MAIN Unit for maximum deflection on the RF millivoltmeter (+6 - 14 dBm).

3rd Local Level Adjustment

- ❒ Connect the RF millivoltmeter to TP1058 on the MAIN Unit.
- ❒ Adjust T1029 on the MAIN Unit for maximum deflection on the RF millivoltmeter (+6 to 14 dBm).

IF Transformer Adjustment

- ❒ Set the VFO-A frequency to 14.200 MHz in the CW-USB mode.
- ❒ Set the following controls as indicated:
  [ANT] : ANT 1
  [IPO] : AMP1
  [ATT] : OFF
  [R.FLT] : 3 kHz
  [AGC] : AUTO
  [RF GAIN] : Fully clockwise
- ❒ Connect the AF millivoltmeter and 4 Ohm dummy load to the EXT SP jack.
- ❒ Connect the RF Signal Generator to the "ANT 1" jack, then set the output level to +5 - -10 dBμ at the 14.200 MHz.
- ❒ Adjust T1034 and T1025 on the MAIN Unit in succession several times for maximum deflection on the AF millivoltmeter.

Note: If the S-meter deflects while adjusting, reduce the RF Signal Generator output so that the S-meter does not deflect.

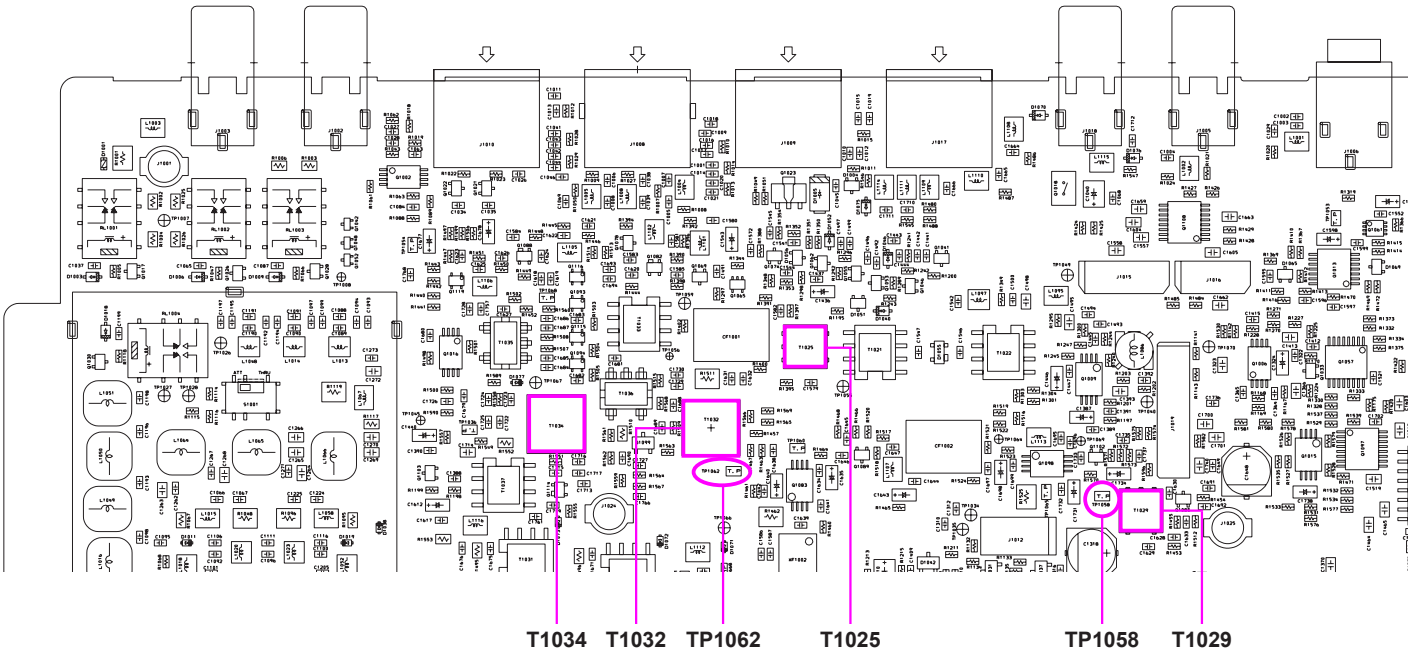

MAIN UNIT (RECEIVER SECTION) ALIGNMENT POINT

MCF Adjustment (1)

- ❒ Set the VFO-A frequency to 14.200 MHz in the CW-USB mode.
- ❒ Set the following controls as indicated:
  [ANT] : ANT 1
  [IPO] : AMP1
  [ATT] : OFF
  [μ-TUNE] : THRU
  [R.FLT] : 15 kHz
  [AGC] : AUTO
  [RF GAIN] : Fully clockwise
- ❒ Connect the AF millivoltmeter and 4 Ohm dummy load to the EXT SP jack.
- ❒ Connect the RF Signal Generator to the "ANT 1" jack, then set the output level to 0 dBμ at the 14.200 MHz.
- ❒ Adjust T1015 and T1018 on the MAIN Unit in succession several times for maximum deflection on the AF millivoltmeter.

Note: If the S-meter deflects while adjusting, reduce the RF Signal Generator output so that the S-meter does not deflect.

IF Trap Adjustment

- ❒ Set the VFO-A frequency to 50.100 MHz in the CW-USB mode.
- ❒ Set the following controls as indicated:
  [ANT] : ANT 1
  [IPO] : AMP1
  [ATT] : OFF
  [R.FLT] : 3 kHz
  [AGC] : AUTO
  [RF GAIN] : Fully clockwise
- ❒ Connect the AF millivoltmeter and 4 Ohm dummy load to the EXT SP jack.
- ❒ Connect the RF Signal Generator to the "ANT 1" jack, then set the output level to +40 ~ +80 dBμ at the 40.455 MHz.
- ❒ Adjust T1008 on the MAIN Unit for minimum deflection on the AF millivoltmeter.

Note: If the S-meter deflects while adjusting, reduce the RF Signal Generator output so that the S-meter does not deflect.

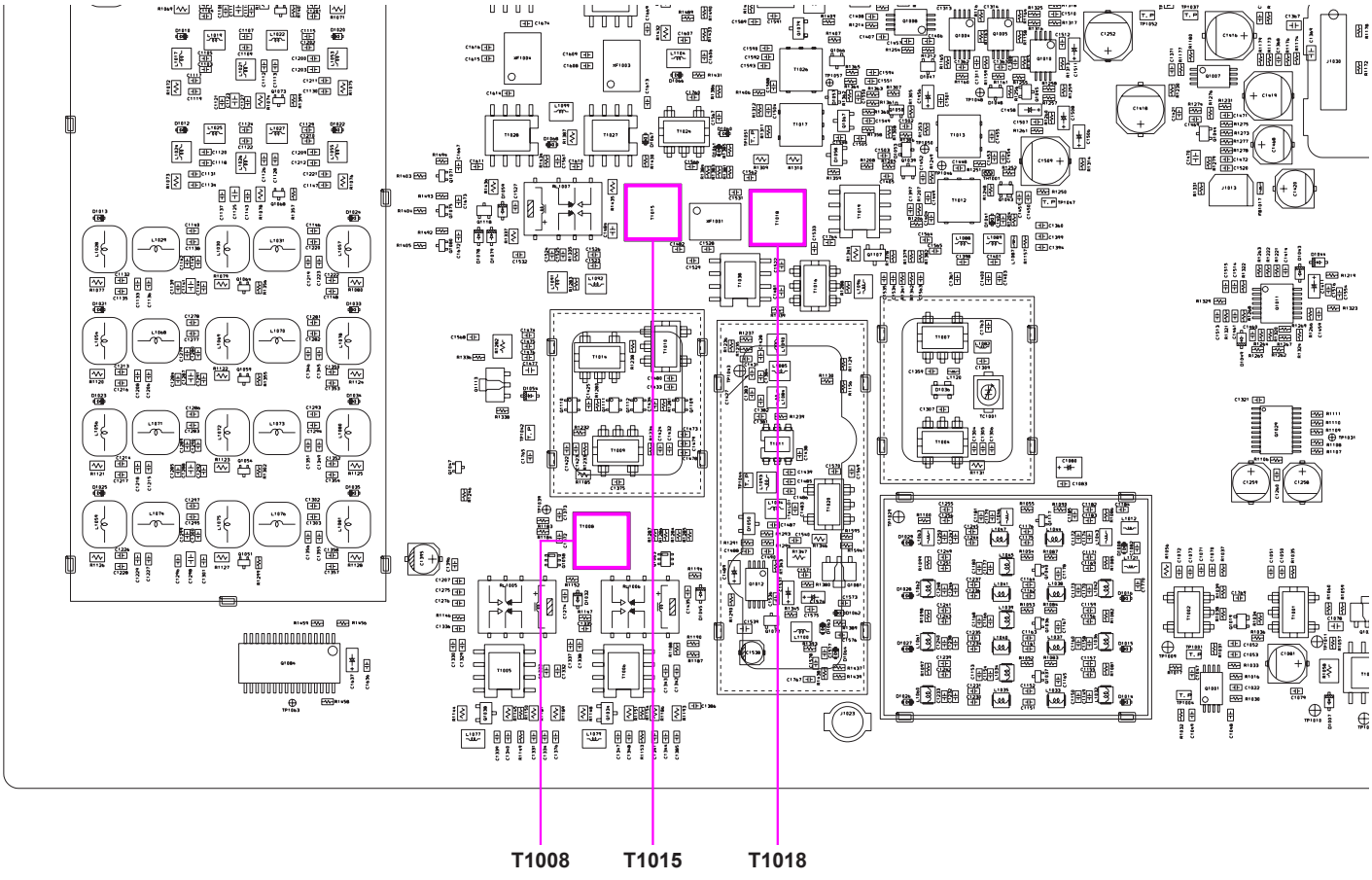

MAIN UNIT (RECEIVER SECTION) ALIGNMENT POINT

MCF Adjustment (2)

- ❒ Set the VFO-A frequency to 50.100 MHz in the FM mode.
- ❒ Set the following controls as indicated:
  [ANT] : ANT 1
  [IPO] : AMP2
  [ATT] : OFF
  [R.FLT] : AUTO
  [AGC] : AUTO
  [RF GAIN] : Fully clockwise
- ❒ Connect the SINAD meter and 4 Ohm dummy load to the EXT SP jack.
- ❒ Connect the RF Signal Generator to the "ANT 1" jack, then set the output level to –10 ~ 0 dBµ at the 50.100 MHz with ±3.5 kHz deviation FM modulation of a 1 kHz audio signal.
- ❒ Adjust T1015 and T1018 on the MAIN Unit in succession several times for maximum deflection on the SINAD meter.

Note: Do not adjust T1015 and T1018 more than 180 degrees rotation.

Noise Blanker Circuit Adjustment

- ❒ Set the VFO-A frequency to 14.200 MHz in the CW-USB mode.
- ❒ Set the following controls as indicated:
  [ANT] : ANT 1
  [IPO] : AMP2
  [ATT] : OFF
  [R.FLT] : AUTO
  [AGC] : AUTO
  [NB] : ON (for short-duration pulse noise)
  [RF GAIN] knob: Fully clockwise
- ❒ Connect the Digital DC voltmeter (high-Z) to TP1054 on the MAIN Unit.
- ❒ Connect the RF Signal Generator to the "ANT 1" jack, then set the output level to 50 dBµ at 14.200 MHz.
- ❒ Confirm on the DC voltmeter reading less than 2.30 V.
- ❒ Turn the NB to "OFF".

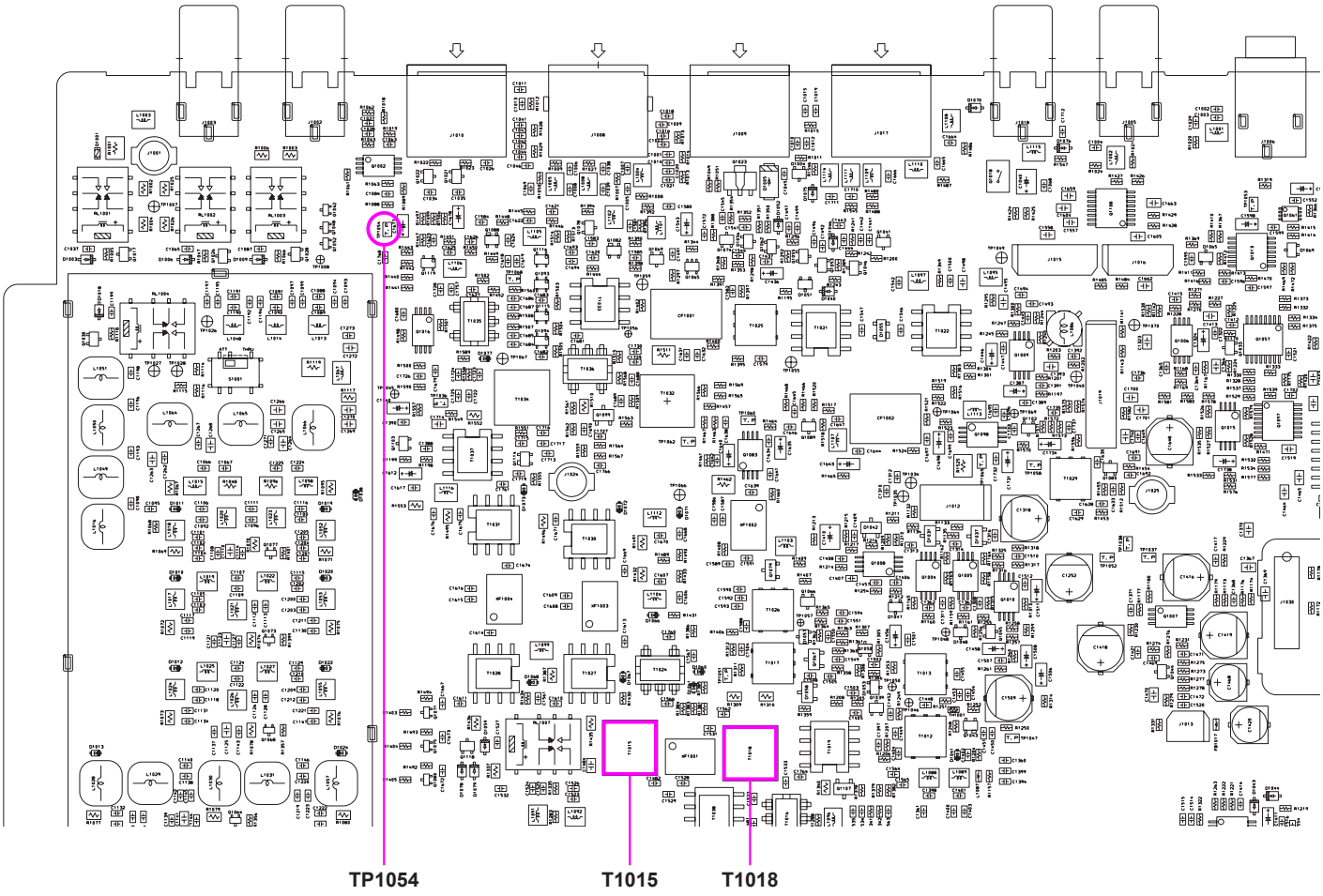

MAIN UNIT (RECEIVER SECTION) ALIGNMENT POINT

RF AGC Adjustment

- ❒ Set the following controls as indicated:
  [ANT] : ANT 1
  [IPO] : AMP1
  [ATT] : OFF
  [R.FLT] button: 3 kHz
  [AGC] button: AUTO
  [RF GAIN] knob: Fully clockwise
  [MODE] button: CW
- ❒ Connect the RF Signal Generator to the "ANT 1" jack, and connect the Digital DC voltmeter (high-Z) to TP1041 on the MAIN Unit.
- ❒ Press and hold in the [1.8(1)], [3.5(2)], and [7(3)] keys, while turning the radio on, to enter the alignment mode.
- ❒ Select the appropriate "Alignment Parameter" using the Main Tuning Dial knob per the chart right, then set the RF Signal Generator output to each frequency & level, and adjust the [VFO-B/CLAR] knob for the corresponding DC voltmeter reading at each frequency.

Alignment Parameter	RF Signal Gennerator	VFO-A Frequency	DC voltmeter
3-01 RF-AGC 1.8	1.900 MHz, 76 dBμ	1.900 MHz	0.35 - 0.42 V
3-02 RF-AGC 3.5	3.750 MHz, 76 dBμ	3.750 MHz	0.35 - 0.42 V
3-03 RF-AGC 7	7.150 MHz, 76 dBμ	7.150 MHz	0.35 - 0.42 V
3-04 RF-AGC 10	10.125 MHz, 76 dBμ	10.125 MHz	0.35 - 0.42 V
3-05 RF-AGC 14	14.175 MHz, 76 dBμ	14.175 MHz	0.35 - 0.42 V
3-06 RF-AGC 18	18.117 MHz, 76 dBμ	18.117 MHz	0.35 - 0.42 V
3-07 RF-AGC 21	21.255 MHz, 76 dBμ	21.255 MHz	0.35 - 0.42 V
3-08 RF-AGC 24	24.940 MHz, 76 dBμ	24.940 MHz	0.35 - 0.42 V
3-09 RF-AGC 28	28.850 MHz, 76 dBμ	28.850 MHz	0.35 - 0.42 V
3-10 RF-AGC 50	52.000 MHz, 76 dBμ	52.000 MHz	0.35 - 0.42 V

- ❒ Press and hold in the [MENU] button for one second to save the new setting and exit the alignment mode.

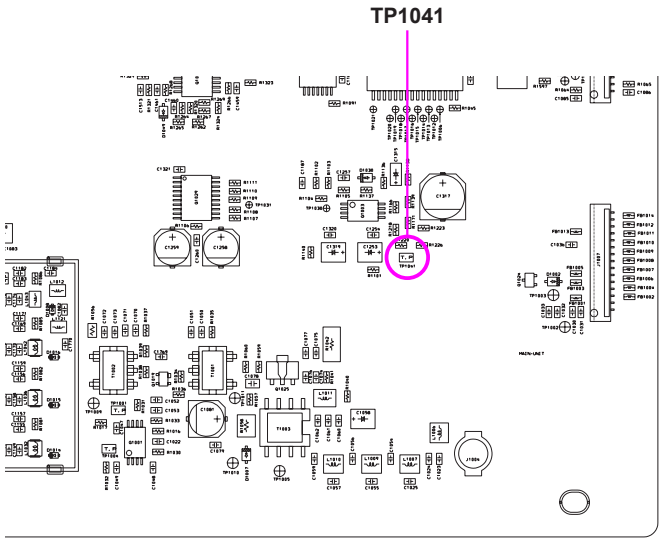

MAIN Unit (Receiver Section) Alignment Point

IF Gain Adjustment

- ❒ Set the following controls as indicated:
  [ANT] : ANT 1
  [IPO] : AMP1
  [ATT] : OFF
  [R.FLT] : 3 kHz
  [AGC] : AUTO
  [RF GAIN] : Fully clockwise
  [MODE] : CW-USB
- ❒ Set the CW PITCH frequency to "700 Hz" via Menu item "056 CW PITCH".
- ❒ Connect the AF millivoltmeter and 4 Ohm dummy load to the EXT SP jack.
- ❒ Connect the RF Signal Generator to the "ANT 1" jack, then set the output level to 36 dBμ at 1.900 MHz.
- ❒ Set the Main Band (VFO-A) frequency to 1.900 MHz in the CW mode.
- ❒ Press and hold in the [1.8(1)], [3.5(2)], and [7(3)] keys, while turning the radio on, to enter the alignment mode.
- ❒ Adjust the Main [AF GAIN] knob so that the AF millivoltmeter reading is "0 dB".
- ❒ Select the appropriate "Alignment Parameter" using the Main Tuning Dial knob per the chart below, then set the RF Signal Generator output to each frequency & level, and adjust the [VFO-B/CLAR] knob for the corresponding AC millivoltmeter reading at each frequency.
- ❒ Press and hold in the [MENU] button for one second to save the new settings and exit the alignment mode.

Alignment Parameter	RF Signal Generator	VFO-A Frequency	AF millivoltmeter
4-01 IF-G 1.8	1.900 MHz, +10 dBμ	1.900 MHz	–1.5 dB (±0.5 dB)
4-02 IF-G 3.5	3.750 MHz, +10 dBμ	3.750 MHz	–1.5 dB (±0.5 dB)
4-03 IF-G 7	7.150 MHz, +10 dBμ	7.150 MHz	–1.5 dB (±0.5 dB)
4-04 IF-G 10	10.125 MHz, +10 dBμ	10.125 MHz	–1.5 dB (±0.5 dB)
4-05 IF-G 14	14.175 MHz, +10 dBμ	14.175 MHz	–1.5 dB (±0.5 dB)
4-06 IF-G 18	18.117 MHz, +10 dBμ	18.117 MHz	–1.5 dB (±0.5 dB)
4-07 IF-G 21	21.255 MHz, +10 dBμ	21.255 MHz	–1.5 dB (±0.5 dB)
4-08 IF-G 24	24.940 MHz, +10 dBμ	24.940 MHz	–1.5 dB (±0.5 dB)
4-09 IF-G 28	28.850 MHz, +10 dBμ	28.850 MHz	–1.5 dB (±0.5 dB)
4-10 IF-G 50	52.000 MHz, +10 dBμ	52.000 MHz	–1.5 dB (±0.5 dB)

S-meter Adjustment

- ❒ Set the VFO-A frequency to 14.200 MHz in the CW-USB mode.
- ❒ Set the following controls as indicated:
  [ANT] : ANT 1
  [IPO] : AMP1
  [ATT] : OFF
  [R.FLT] : 3 kHz
  [AGC] : AUTO
  [RF GAIN] : Fully clockwise
- ❒ Connect the RF Signal Generator to the "ANT 1" jack, then set the frequency to 14.200 MHz.
- ❒ Press and hold in the [1.8(1)], [3.5(2)], and [7(3)] keys, while turning the radio on, to enter the alignment mode.
- ❒ Refer to the chart below and select the appropriate "Alignment Parameter" using the Main Tuning Dial knob. Set the RF Signal Generator output to each level, and adjust the [VFO-B/CLAR] knob for the corresponding S-meter reading. Press the [ENT] key to save the new setting at each level.
- ❒ Press and hold in the [MENU] button for one second to save the new settings and exit the alignment mode.

Alignment Parameter	RF Signal Generator	S-meter
5-01 S-MTR 0	OFF	Turn on one dot
5-02 S-MTR 1	+14 dBµ	S-1
5-03 S-MTR 5	+24 dBµ	S-5
5-04 S-MTR 7	+30 dBµ	S-7
5-05 S-MTR 9	+36 dBµ	S-9
5-06 S-MTR+10	+46 dBµ	S-9+10dB
5-07 S-MTR+20	+56 dBµ	S-9+20dB
5-08 S-MTR+30	+66 dBµ	S-9+30dB
5-09 S-MTR+40	+76 dBµ	S-9+40dB
5-10 S-MTR+50	+86 dBµ	S-9+50dB
5-11 S-MTR+60	+96 dBµ	S-9+60dB

FM Gain Adjustment

- ❒ Set the Main Band (VFO-A) frequency to 28.850 MHz in the FM-W mode.
- ❒ Set the following controls as indicated:
  [ANT] : ANT 1
  [IPO] : AMP1
  [ATT] : OFF
  [R.FLT] : 15 kHz
  [AGC] : AUTO
  [RF GAIN] : Fully clockwise
- ❒ Set the RF Signal Generator to 12 dBµ at the 28.8500 MHz with ±3.5 kHz deviation FM modulation of a 1 kHz audio signal.
- ❒ Press and hold in the [1.8(1)], [3.5(2)], and [7(3)] keys, while turning the radio on, to enter the alignment mode.
- ❒ Rotate the Main Tuning Dial knob to select the alignment parameter "7-01 FM-GAIN 28".
- ❒ Rotate the [VFO-B/CLAR] knob so that the S-meter reading is "S-3".
- ❒ Press and hold in the [MENU] button for one second to save the new setting and exit the alignment mode.
- ❒ Set the RF Signal Generator to 9 dBµ at the 52.000 MHz with ±3.5 kHz deviation FM modulation of a 1 kHz audio signal.
- ❒ Set the VFO-A frequency to 52.000 MHz in the FM-W mode.
- ❒ Press and hold in the [1.8(1)], [3.5(2)], and [7(3)] keys, while turning the radio on, to enter the alignment mode again.
- ❒ Rotate the Main Tuning Dial knob to select the alignment parameter "7-02 FM-GAIN 50".
- ❒ Rotate the [VFO-B/CLAR] knob so that the S-meter reading is "S-3".
- ❒ Press and hold in the [MENU] button for one second to save the new setting and exit the alignment mode.

Transmitter Adjustment

TX IFT Adjustment

- ❒ Disconnect the coaxial cable from J1004 on the MAIN Unit, then connect the RF millivoltmeter to J1004.
- ❒ Set the VFO-A frequency to 14.200 MHz in the CW-USB mode.
- ❒ Rotate the [PROC/PWR] knob to set the TX Power to 100 W.
- ❒ Press the PTT button, adjust T1026, T1013 and T1012 for maximum deflection on the RF millivoltmeter.
- ❒ Release the PTT button.
- ❒ Set the FM-W mode.
- ❒ Press the PTT button, adjust T1017 for maximum deflection on the RF millivoltmeter.
- ❒ Release the PTT button.
- ❒ Set the CW-USB mode.
- ❒ Press the PTT button, adjust T1026 for maximum deflection on the RF millivoltmeter.
- ❒ Release the PTT button.
- ❒ Disconnect the RF millivoltmeter from J1004, then re-connect the coaxial cable to J1004.

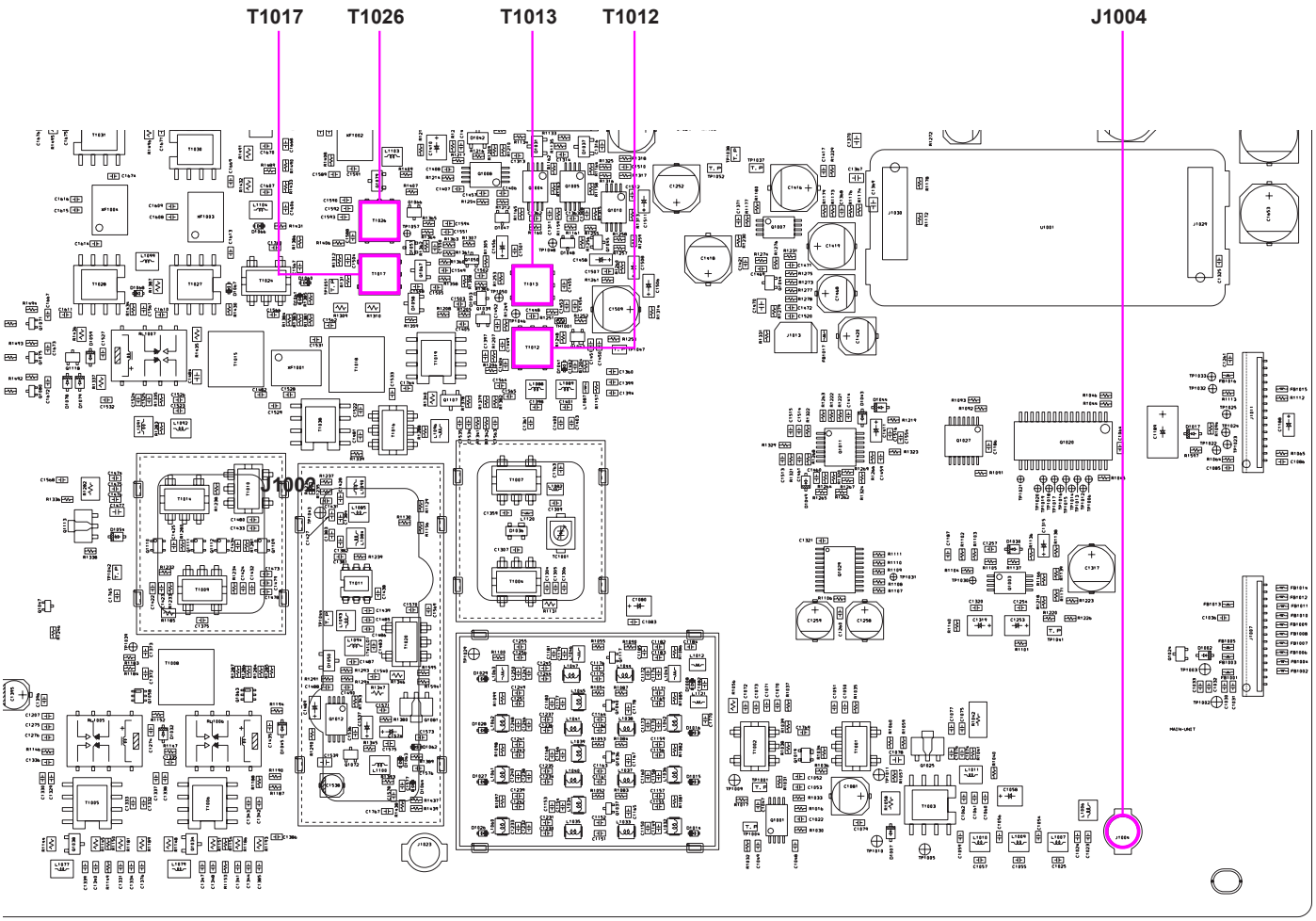

MAIN UNIT (TRANSMITTER SECTION) ALIGNMENT POINT

PA Unit Adjustment

Preparation

- ❒ Connect the 50-Ohm Dummy Load and Wattmeter to the "ANT 1" jack.
- ❒ Disconnect the coaxial cables from J5001 and J5007 on the PA Unit, then terminate J5001 and J5007, each with a 50-Ohm resistor.
- ❒ Disconnect the jumper plugs from J5003 and J5005 on the PA-A Unit.

Pre-Drive Stage Idling Current Adjustment

- ❒ Connect the DC ammeter to J5003 on the PA Unit.
- ❒ Press and hold in the [1.8(1)], [3.5(2)], and [7(3)] keys, while turning the radio on, to enter the alignment mode.
- ❒ Rotate the Main Tuning Dial knob to select the alignment parameter "8-01 PDR".
- ❒ Press and hold the PTT button, while adjusting the [VFO-B/CLAR] knob so the DC ammeter reading is "100 mA (±5 mA)".
- ❒ Release the PTT button.

Drive Stage Idling Current Adjustment

- ❒ Connect the DC ammeter to J5005 on the PA Unit.
- ❒ Rotate the Main Tuning Dial knob to select the alignment parameter "8-02 DR1".
- ❒ Press and hold the PTT button, while adjusting the [VFO-B/CLAR] knob so the DC ammeter reading is "700 mA (±50 mA)".
- ❒ Release the PTT button.
- ❒ Rotate the Main Tuning Dial knob to select the alignment parameter "8-03 DR2".
- ❒ Press the PTT button, then adjust the [VFO-B/CLAR] knob so that the DC ammeter reading is "700 mA (±50 mA)".
- ❒ Release the PTT button.

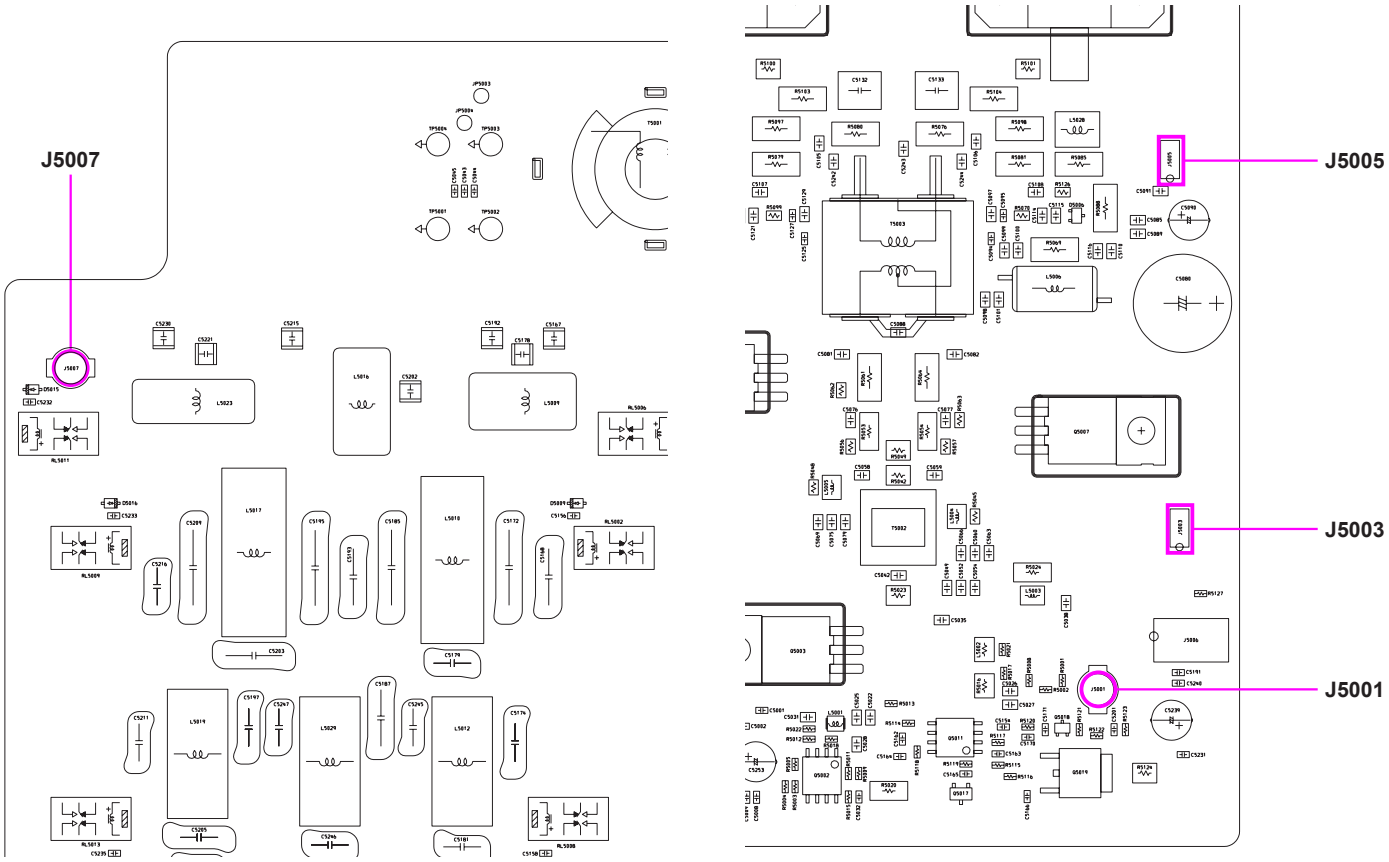

PA UNIT ALIGNMENT POINTS

Final Stage Idling Current Adjustment

- ❒ Connect the DC ammeter between J5008 and J5009 on the PA Unit.
- ❒ Rotate the Main Tuning Dial knob to select the alignment parameter "8-04 F1".
- ❒ Press and hold the PTT button, while adjusting the [VFO-B/CLAR] knob so the DC ammeter reading is "1.5 A (±50 mA)".
- ❒ Release the PTT button.
- ❒ Rotate the Main Tuning Dial knob to select the alignment parameter "8-05 F2".
- ❒ Press and hold the PTT button, while adjusting the [VFO-B/CLAR] knob so the DC ammeter reading is "1.5 A (±50 mA)".
- ❒ Release the PTT button.

Termination

- ❒ Press and hold in the [MENU] button for one second to save the new settings and exit the alignment mode.
- ❒ Disconnect the 50-Ohm resistors from J5001 and J5007, then connect the coaxial cables to J5001 and J5007.
- ❒ Re-connect the jumper plugs to J5008 and J5009.

Antenna Tuner Adjustment

CM Coupler Balance Adjustment

- ❒ Connect the 50-Ohm Dummy Load and Wattmeter to the "ANT 1" jack.
- ❒ Connect the Digital DC voltmeter (high-Z) to pin 3 of J5506 on the TUNER Unit.
- ❒ Turn off the [TUNE] switch, then set the VFO-A frequency to 24.900 MHz in the CW-USB mode.
- ❒ Press and hold in the [1.8(1)], [3.5(2)], and [7(3)] keys, while turning the radio on, to enter the alignment mode.
- ❒ Rotate the Main Tuning Dial knob to select the alignment parameter "9-08 I-ALC 24".
- ❒ Press and hold the PTT button, while adjusting the [VFO-B/CLAR] knob for 50 Watts on the Wattmeter.
- ❒ Adjust TC5501 on the TUNER Unit for minimum deflection on the DC voltmeter (less than 0.1 V).
- ❒ Release the PTT button.
- ❒ Press and hold in the [MENU] button for one second to save the new setting and exit the alignment mode.

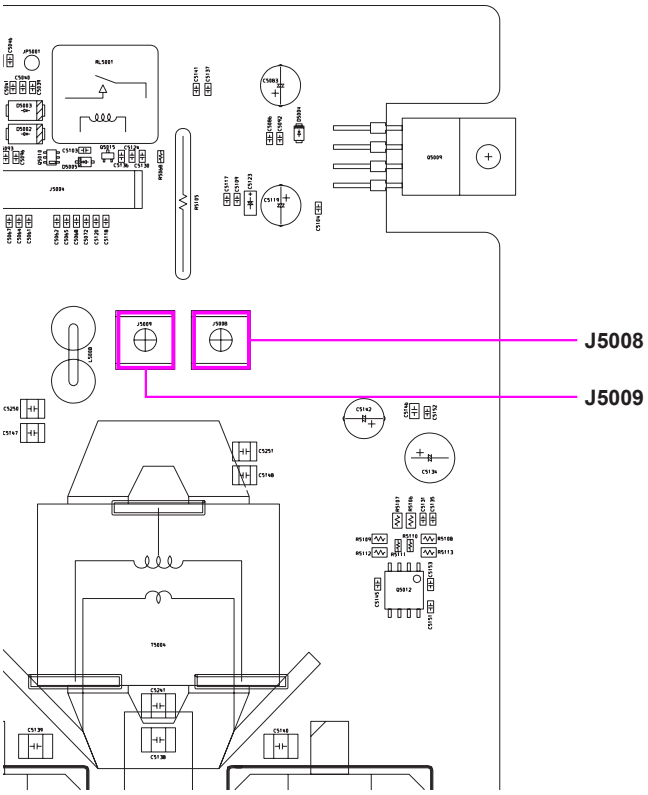

PA Unit Alignment Points

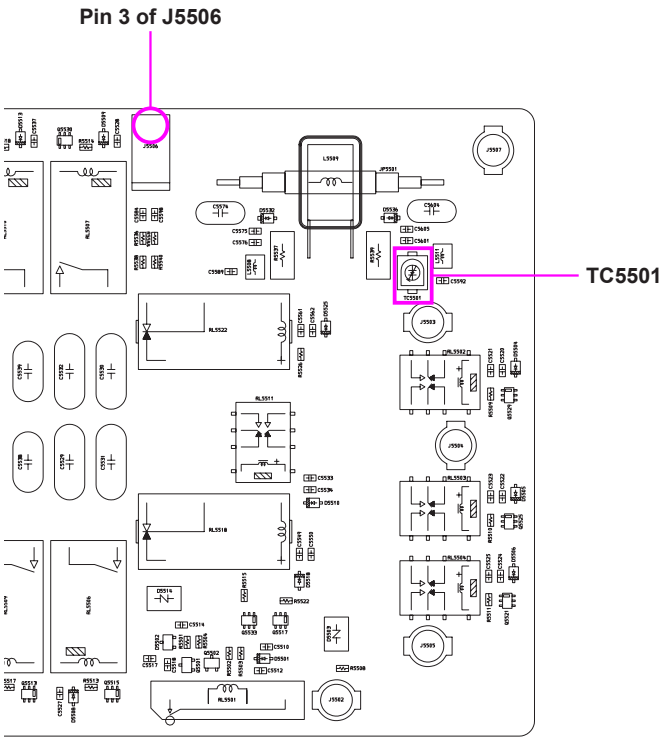

TUNER Unit Alignment Points

Current ALC Adjustment

- ❒ Connect the 50-Ohm Dummy Load and Wattmeter to the "ANT 1" jack.
- ❒ Press and hold in the [1.8(1)], [3.5(2)], and [7(3)] keys, while turning the radio on, to enter the alignment mode.
- ❒ Rotate the Main Tuning Dial knob to select the alignment parameter "9-01 I-ALC1.8" for the 1.8 MHz amateur band's ALC Adjustment.
- ❒ Press the PTT button, then adjust the [VFO-B/CLAR] knob for 120 W on the Wattmeter.
- ❒ Release the PTT button, then rotate the [VFO-B/CLAR] knob so that the frequency indication "10" in-crease.
- ❒ Rotate the Main Tuning Dial knob to select the alignment parameter "9-02 I-ALC3.5" for the 3.5 MHz amateur band's ALC Adjustment.
- ❒ Press the PTT button, then adjust the [VFO-B/CLAR] knob for 110 W on the Wattmeter.
- ❒ Release the PTT button, then rotate the [VFO-B/CLAR] knob so the frequency indication increase.
- ❒ Rotate the Main Tuning Dial knob to select the alignment parameter "9-03 I-ALC7" for the 7 MHz amateur band's ALC Adjustment.
- ❒ Press the PTT button, then adjust the [VFO-B/CLAR] knob for 120 W on the Wattmeter.
- ❒ Release the PTT button, then rotate the [VFO-B/CLAR] knob so the frequency indication increase.
- ❒ Rotate the Main Tuning Dial knob to select the alignment parameter "9-04 I-ALC10" for the 10 MHz amateur band's ALC Adjustment.
- ❒ Press the PTT button, then adjust the [VFO-B/CLAR] knob for 120 W on the Wattmeter.
- ❒ Release the PTT button, then rotate the [VFO-B/CLAR] knob so the frequency indication increase.
- ❒ Rotate the Main Tuning Dial knob to select the alignment parameter "9-05 I-ALC14" for the 14 MHz amateur band's ALC Adjustment.
- ❒ Press the PTT button, then adjust the [VFO-B/CLAR] knob for 120 W on the Wattmeter.
- ❒ Release the PTT button, then rotate the [VFO-B/CLAR] knob so the frequency indication increase.
- ❒ Rotate the Main Tuning Dial knob to select the alignment parameter "9-06 I-ALC18" for the 18 MHz amateur band's ALC Adjustment.
- ❒ Press the PTT button, then adjust the [VFO-B/CLAR] knob for 120 W on the Wattmeter.
- ❒ Release the PTT button, then rotate the [VFO-B/CLAR] knob so the frequency indication increase.
- ❒ Rotate the Main Tuning Dial knob to select the alignment parameter "9-07 I-ALC21" for the 21 MHz amateur band's ALC Adjustment.
- ❒ Press the PTT button, then adjust the [VFO-B/CLAR] knob for 120 W on the Wattmeter.
- ❒ Release the PTT button, then rotate the [VFO-B/CLAR] knob so the frequency indication increase.
- ❒ Rotate the Main Tuning Dial knob to select the alignment parameter "9-08 I-ALC24" for the 24 MHz amateur band's ALC Adjustment.
- ❒ Press the PTT button, then adjust the [VFO-B/CLAR] knob for 120 W on the Wattmeter.
- ❒ Release the PTT button, then rotate the [VFO-B/CLAR] knob so the frequency indication increase.
- ❒ Rotate the Main Tuning Dial knob to select the alignment parameter "9-09 I-ALC28" for the 28 MHz amateur band's ALC Adjustment.
- ❒ Press the PTT button, then adjust the [VFO-B/CLAR] knob for 120 W on the Wattmeter.
- ❒ Release the PTT button, then rotate the [VFO-B/CLAR] knob so the frequency indication increase.
- ❒ Rotate the Main Tuning Dial knob to select the alignment parameter "9-10 I-ALC50" for the 50 MHz amateur band's ALC Adjustment.
- ❒ Press the PTT button, then adjust the [VFO-B/CLAR] knob for 120 W on the Wattmeter.
- ❒ Release the PTT button.
- ❒ Press and hold in the [MENU] button for one second to save the new setting and exit the alignment mode.

ALC Meter Adjustment

- ❒ Connect the 50-Ohm Dummy Load and Wattmeter to the “ANT 1” jack.
- ❒ Set the VFO-A frequency to 14.200 MHz in the CW-USB mode.
- ❒ Press and hold in the [1.8(1)], [3.5(2)], and [7(3)] keys, while turning the radio on, to enter the alignment mode.
- ❒ Rotate the Main Tuning Dial knob to select the alignment parameter “14-01 P1H”.
- ❒ Rotate the [VFO-B/CLAR] knob so that the Display Window shows “0”.
- ❒ Press the PTT button, then rotate the [VFO-B/CLAR] knob for 100 W (+5W/–0W) on the Wattmeter.
- ❒ Release the PTT button.
- ❒ Press and hold in the [MENU] button for one second to save the new setting and exit the alignment mode.
- ❒ Set the USB mode.
- ❒ Set the value of alignment parameter “14-03 TXG 14” to “255”.
- ❒ Set the value of alignment parameter “20-01 TX CAR USB” to “255”.
- ❒ Press and hold in the [1.8(1)], [3.5(2)], and [7(3)] keys, while turning the radio on, to enter the alignment mode.
- ❒ Rotate the Main Tuning Dial knob to select the alignment parameter “22-01 ALC”.
- ❒ Set the MIC GAIN to "50".
- ❒ Connect the Audio Generator to pin 8 of the MIC jack (pin 7: GND), then set the output level to 0.5 mV @1 kHz.

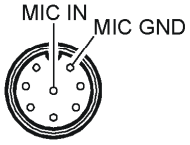

- ❒ Press the PTT button, then adjust the Audio Generator output level to the position where RF Power output to 90 - 95 W on the Wattmeter.
- ❒ Release the PTT button.
- ❒ Increase the Audio Generator output level by “9 dB”.
- ❒ Press the PTT button, then press the [ENT] key while pressing and holding in the PTT button.
- ❒ Release the PTT button.
- ❒ Press the [ENT] key, while pressing and holding in the PTT button, then rotate the [VFO-B/CLAR]knob for maximum deflection on the ALC meter zone (S9 +5 dB).
- ❒ Release the PTT button, then press and hold in the [MENU] button for one second to save the new setting and exit the alignment mode.

TX Output Power/PO Meter/TXG Adjustment

❒ Referring to table below, tune the transceiver to each frequency listed.

Band	VFO-A Frequency	Mode
1.8 MHz Band	1.820 MHz	CW-USB
3.5 MHz Band	3.570 MHz	CW-USB
7 MHz Band	7.050 MHz	CW-USB
10 MHz Band	10.100 MHz	CW-USB
14 MHz Band	14.200 MHz	CW-USB
18 MHz Band	18.100 MHz	CW-USB
21 MHz Band	21.200 MHz	CW-USB
24.5 MHz Band	24.900 MHz	CW-USB
28 MHz Band	28.700 MHz	CW-USB
50 MHz Band	51.900 MHz※	CW-USB

※ UK: 51.000 MHz, EU: 50.250 MHz, FRA: 50.700 MHz

❒ Connect the 50-Ohm Dummy Load and Wattmeter to the "ANT 1" jack.

❒ Set the VFO-A frequency to 1.820 MHz in the CW-USB mode.

❒ Press and hold in the [1.8(1)], [3.5(2)], and [7(3)] keys, while turning the radio on, to enter the alignment mode.

❒ Rotate the Main Dial knob to select the alignment parameter "10-01 P1H".

❒ Press and hold the PTT button, then rotate the [VFO-B/CLAR] knob for 101 W (+5W/–1W) on the Wattmeter.

❒ Release the PTT button.

❒ Rotate the Main Dial knob to select the alignment parameter "10-02 P1H".

❒ Press and hold the PTT button, then rotate the [VFO-B/CLAR] knob for 100 W on the PO meter.

❒ Release the PTT button.

❒ Rotate the Main Dial knob to select the alignment parameter "10-03 P1H".

❒ Press and hold the PTT button, then rotate the [VFO-B/CLAR] knob for maximum deflection on the ALC meter zone.

❒ Release the PTT button.

	Alignment Menu	Operation	POWER meter (Adjust to)	ALC Meter Zone (Adjust to)		Alignment Menu	Operation	POWER meter (Adjust to)	ALC Meter Zone (Adjust to)
1.9 MHz	10-01 P1H	Rotate the [VFO-B/CLAR] knob	101 W (+5 W / –1 W)	–	14 MHz	14-01 P1H	Rotate the [VFO-B/CLAR] knob	101 W (+5 W / –1 W)	–
	10-02 P1H	Press the [PTT] button	–	–		14-02 P1H	Press the [PTT] button	–	–
	10-03 P1H	Rotate the [VFO-B/CLAR] knob	–	Maximum deflection		14-03 P1H	Rotate the [VFO-B/CLAR] knob	–	Maximum deflection
	10-04 P50	Rotate the [VFO-B/CLAR] knob	50 W (+5 W / –0 W)	–		14-04 P50	Rotate the [VFO-B/CLAR] knob	50 W (+5 W / –0 W)	–
	10-05 P50	Press the [PTT] button	–	–		14-05 P50	Press the [PTT] button	–	–
	10-06 P50	Rotate the [VFO-B/CLAR] knob	–	Maximum deflection		14-06 P50	Rotate the [VFO-B/CLAR] knob	–	Maximum deflection
	10-07 P20	Rotate the [VFO-B/CLAR] knob	20 W (+2 W / –0 W)	–		14-07 P20	Rotate the [VFO-B/CLAR] knob	20 W (+2 W / –0 W)	–
	10-08 P20	Press the [PTT] button	–	–		14-08 P20	Press the [PTT] button	–	–
	10-09 P20	Rotate the [VFO-B/CLAR] knob	–	Maximum deflection		14-09 P20	Rotate the [VFO-B/CLAR] knob	–	Maximum deflection
	10-10 P10	Rotate the [VFO-B/CLAR] knob	10 W (+1 W / –0 W)	–		14-10 P10	Rotate the [VFO-B/CLAR] knob	10 W (+1 W / –0 W)	–
	10-11 P10	Press the [PTT] button	–	–		14-11 P10	Press the [PTT] button	–	–
	10-12 P10	Rotate the [VFO-B/CLAR] knob	–	Maximum deflection		14-12 P10	Rotate the [VFO-B/CLAR] knob	–	Maximum deflection
	10-13 P05	Rotate the [VFO-B/CLAR] knob	5 W (+1 W / –0 W)	–		14-13 P05	Rotate the [VFO-B/CLAR] knob	5 W (+1 W / –0 W)	–
	10-14 P05	Press the [PTT] button	–	–		14-14 P05	Press the [PTT] button	–	–
	10-15 P05	Rotate the [VFO-B/CLAR] knob	–	Maximum deflection		14-15 P05	Rotate the [VFO-B/CLAR] knob	–	Maximum deflection
3.5 MHz	11-01 P1H	Rotate the [VFO-B/CLAR] knob	101 W (+5 W / –1 W)	–	24 MHz	17-01 P1H	Rotate the [VFO-B/CLAR] knob	101 W (+5 W / –1 W)	–
	11-02 P1H	Press the [PTT] button	–	–		17-02 P1H	Press the [PTT] button	–	–
	11-03 P1H	Rotate the [VFO-B/CLAR] knob	–	Maximum deflection		17-03 P1H	Rotate the [VFO-B/CLAR] knob	–	Maximum deflection
	11-04 P50	Rotate the [VFO-B/CLAR] knob	50 W (+5 W / –0 W)	–		17-04 P50	Rotate the [VFO-B/CLAR] knob	50 W (+5 W / –0 W)	–
	11-05 P50	Press the [PTT] button	–	–		17-05 P50	Press the [PTT] button	–	–
	11-06 P50	Rotate the [VFO-B/CLAR] knob	–	Maximum deflection		17-06 P50	Rotate the [VFO-B/CLAR] knob	–	Maximum deflection
	11-07 P20	Rotate the [VFO-B/CLAR] knob	20 W (+2 W / –0 W)	–		17-07 P20	Rotate the [VFO-B/CLAR] knob	20 W (+2 W / –0 W)	–
	11-08 P20	Press the [PTT] button	–	–		17-08 P20	Press the [PTT] button	–	–
	11-09 P20	Rotate the [VFO-B/CLAR] knob	–	Maximum deflection		17-09 P20	Rotate the [VFO-B/CLAR] knob	–	Maximum deflection
	11-10 P10	Rotate the [VFO-B/CLAR] knob	10 W (+1 W / –0 W)	–		17-10 P10	Rotate the [VFO-B/CLAR] knob	10 W (+1 W / –0 W)	–
	11-11 P10	Press the [PTT] button	–	–		17-11 P10	Press the [PTT] button	–	–
	11-12 P10	Rotate the [VFO-B/CLAR] knob	–	Maximum deflection		17-12 P10	Rotate the [VFO-B/CLAR] knob	–	Maximum deflection
	11-13 P05	Rotate the [VFO-B/CLAR] knob	5 W (+1 W / –0 W)	–		17-13 P05	Rotate the [VFO-B/CLAR] knob	5 W (+1 W / –0 W)	–
	11-14 P05	[PTT] button	–	–		17-14 P05	[PTT] button	–	–
	11-15 P05	Rotate the [VFO-B/CLAR] knob	–	Maximum deflection		17-15 P05	Rotate the [VFO-B/CLAR] knob	–	Maximum deflection
7 MHz	12-01 P1H	Rotate the [VFO-B/CLAR] knob	101 W (+5 W / –1 W)	–	50 MHz	19-01 P1H	Rotate the [VFO-B/CLAR] knob	101 W (+5 W / –1 W)	–
	12-02 P1H	Press the [PTT] button	–	–		19-02 P1H	Press the [PTT] button	–	–
	12-03 P1H	Rotate the [VFO-B/CLAR] knob	–	Maximum deflection		19-03 P1H	Rotate the [VFO-B/CLAR] knob	–	Maximum deflection
	12-04 P50	Rotate the [VFO-B/CLAR] knob	50 W (+5 W / –0 W)	–		19-04 P50	Rotate the [VFO-B/CLAR] knob	50 W (+5 W / –0 W)	–
	12-05 P50	Press the [PTT] button	–	–		19-05 P50	Press the [PTT] button	–	–
	12-06 P50	Rotate the [VFO-B/CLAR] knob	–	Maximum deflection		19-06 P50	Rotate the [VFO-B/CLAR] knob	–	Maximum deflection
	12-07 P20	Rotate the [VFO-B/CLAR] knob	20 W (+2 W / –0 W)	–		19-07 P20	Rotate the [VFO-B/CLAR] knob	20 W (+2 W / –0 W)	–
	12-08 P20	Press the [PTT] button	–	–		19-08 P20	Press the [PTT] button	–	–
	12-09 P20	Rotate the [VFO-B/CLAR] knob	–	Maximum deflection		19-09 P20	Rotate the [VFO-B/CLAR] knob	–	Maximum deflection
	12-10 P10	Rotate the [VFO-B/CLAR] knob	10 W (+1 W / –0 W)	–		19-10 P10	Rotate the [VFO-B/CLAR] knob	10 W (+1 W / –0 W)	–
	12-11 P10	Press the [PTT] button	–	–		19-11 P10	Press the [PTT] button	–	–
	12-12 P10	Rotate the [VFO-B/CLAR] knob	–	Maximum deflection		19-12 P10	Rotate the [VFO-B/CLAR] knob	–	Maximum deflection
	12-13 P05	Rotate the [VFO-B/CLAR] knob	5 W (+1 W / –0 W)	–		19-13 P05	Rotate the [VFO-B/CLAR] knob	5 W (+1 W / –0 W)	–
	12-14 P05	Press the [PTT] button	–	–		19-14 P05	Press the [PTT] button	–	–
	12-15 P05	Rotate the [VFO-B/CLAR] knob	–	Maximum deflection		19-15 P05	Rotate the [VFO-B/CLAR] knob	–	Maximum deflection

Note: The 10 MHz, 18 MHz, 21 MHz, and 28 MHz bands do not need the adjustment.

- ❒ Perform the same procedures for the Alignment Menus “10-04 P50” through “10-15 P05” per the chart at the below.
- ❒ Press the [ENT] key to save the new setting at 1.8 MHz Band.
- ❒ Perform the same procedures for the Alignment Menus “11-01 P1H” through “19-15 P05” per the chart at the below.
- ❒ Press and hold in the [MENU] button for one second to save the new settings and exit the alignment mode.

AM-TXG Adjustment

- ❒ Connect the 50-Ohm Dummy Load and Wattmeter to the “ANT 1” jack.
- ❒ Set the value of Menu item “177 TX MAX PWR” to “100”, and rotate the [PROC/CAR] knob for Maximum..
- ❒ Set the VFO-A frequency to 14.200 MHz in the AM mode.
- ❒ Press and hold in the [1.8(1)], [3.5(2)], and [7(3)] keys, while turning the radio on, to enter the alignment mode.
- ❒ Rotate the Main Tuning Dial knob to select the alignment parameter “20-02 TX-CAR AM”
- ❒ Rotate the [VFO-B/CLAR] knob so the Display Window shows “0”.
- ❒ Press and hold the PTT button without microphone input, then rotate the [VFO-B/CLAR] knob for 7 W (+10 W/–10 W) on the Wattmeter.
- ❒ Release the PTT button.
- ❒ Press and hold in the [MENU] button for one second to save the new setting and exit the alignment mode.

REV-ALC Adjustment

- ❒ Connect the 16.6-Ohm Dummy Load to the “ANT 1” jack.
- ❒ Press and hold in the [1.8(1)], [3.5(2)], and [7(3)] keys, while turning the radio on, to enter the alignment mode.
- ❒ Rotate the Main Tuning Dial knob to select the alignment parameter “21-01 REV-ALC 1.8”
- ❒ Press and hold the PTT button, then rotate the [VFO-B/CLAR] knob so the PO meter turns on 50 W (+0 W/- 20 W).
- ❒ Release the PTT button, then press the [ENT] key.
- ❒ Perform the same procedures for the Alignment Menus “21-02 REV-ALC 3.5” through “21-10 REV ALC 50”.
- ❒ Press and hold in the [MENU] button for one second to save the new setting and exit the alignment mode.

FM MAX Deviation Adjustment

- ❒ Connect the Dummy Load, Wattmeter, and Deviation Meter to the “ANT 1” Jack.
- ❒ Set the VFO-A frequency to 28.700 MHz in the FM mode.
- ❒ Set the value of Menu item “085 FM MIC GAIN” to the factory default value.

ADVICE:

Press the [CLEAR] button (located on the upper right of the [VFO-B/CLAR] knob) momentarily to reset the selected menu item to the factory default value.

- ❒ Connect the Audio Generator to pin 8 of the MIC jack (pin 7: GND), then set the output level to 2 mV @1 kHz.

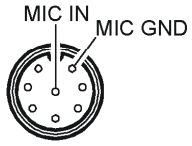

- ❒ Press and hold in the [1.8(1)], [3.5(2)], and [7(3)] keys, while turning the radio on, to enter the alignment mode.
- ❒ Rotate the Main Tuning Dial knob to select the alignment parameter “22-02 FM-DEV”.
- ❒ Press and hold the PTT button, then rotate the [VFO-B/CLAR] knob for 4.5 kHz (±0.2 kHz) on the Deviation Meter.
- ❒ Release the PTT button.
- ❒ Rotate the Main Tuning Dial knob to select the alignment parameter “22-03 FM-N-DEV”.
- ❒ Press and hold the PTT button, then rotate the [VFO-B/CLAR] knob for 2.25 kHz (±0.15 kHz) on the Deviation Meter.
- ❒ Release the PTT button.
- ❒ Press and hold in the [MENU] button for one second to save the new setting and exit the alignment mode.

SWR Meter Adjustment

- ❒ Set the VFO-A frequency to 1.820 MHz in the USB mode.
- ❒ Connect the 50-Ohm Dummy Load and Wattmeter to the "ANT 1" Jack.
- ❒ Disconnect the 3-pin plug from J1012 on the MAIN Unit, then apply a 4.20 ±0.05 V DC voltage to pin 2 of J1012, and 0.84 ±0.05 V DC to pin 3 of J1012.
- ❒ Rotate the [PROC/CAR] knob for Minimum.
- ❒ Press and hold in the [1.8(1)], [3.5(2)], and [7(3)] keys, while turning the radio on, to enter the alignment mode.
- ❒ Rotate the Main Tuning Dial knob to select the alignment parameter "23-01 SWR-MTR1.5 1.8"
- ❒ Press the [MOX] button, then rotate the [VFO-B/CLAR] knob so that the SWR meter (on the front panel) reading is "1.5". The SWR meter reading (1.5) is broad (few points). Therefore, set the [VFO-B/CLAR] knob to the center of this broad range.
- ❒ Release the [MOX] button.

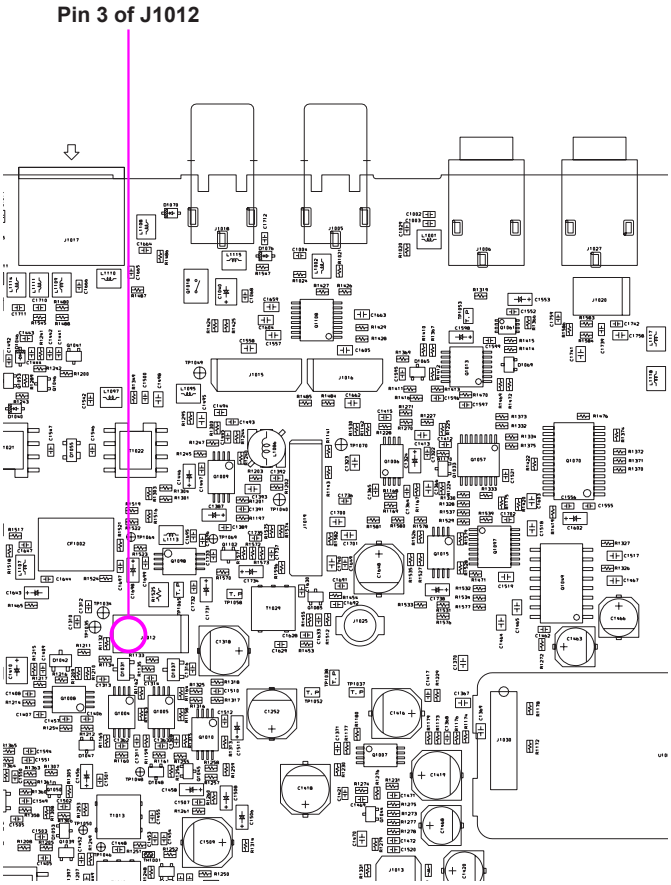

MAIN Unit Alignment Points

- ❒ Apply a 4.20 ±0.05 V DC voltage to pin 2 of J1012, and 1.40 ±0.05 V DC to pin 3 of J1012.
- ❒ Rotate the Main Tuning Dial knob to select the alignment parameter "23-02 SWR-MTR2.0 1.8"
- ❒ Press the [MOX] button, then rotate the [VFO-B/CLAR] knob so that the SWR meter (on the front panel) reading is "2.0." The SWR meter reading (2.0) is broad (few points). Therefore, set the [VFO-B/CLAR] knob to the center of this broad range.
- ❒ Release the [MOX] button.
- ❒ Apply a 4.20 ±0.05 V DC voltage to pin 2 of J1012, and 2.10 ±0.05 V DC to pin 3 of J1012.
- ❒ Rotate the Main Tuning Dial knob to select the alignment parameter "23-03 SWR-MTR3.0 1.8"
- ❒ Press the [MOX] button, then rotate the [VFO-B/CLAR] knob so that the SWR meter (on the front panel) reading is "3.0." The SWR meter reading (3.0) is broad (few points). Therefore, set the [VFO-B/CLAR] knob to the center of this broad range.
- ❒ Release the [MOX]button.
- ❒ Perform the same procedures for the Alignment Menus "23-05 SWR-MTR1.5 14" through "23-07 SWR-MTR3.0 14", "23-09 SWR-MTR1.5 50" through "23-11 SWR-MTR3.0 50".

Note: Please do not change the Alignment Menus "23-04 SWR-MTR CO 1.8", "23-08 SWRMTR CO 14" and "23-12 SWR-MTR CO 50".
These parameters are always 128.

- ❒ Press and hold in the [MENU] button for 2 seconds to save the new settings and exit the alignment mode.
- ❒ Connect the 3-pin plug to J1012 on the MAIN Unit.

Important Notice: If it will be in a transceiver transmitting state, without connecting the 3-pin plug to J1012, there is a possibility that a final transistor may break.

IDD Meter Adjustment

Choose one of the adjustment methods described below, according to the equipment you have available. ***If you perform adjustment method (2) Using a DC Ammeter, complete the transmit adjustments on ALIGNMENT page 11 through 17.***

1) Using an Electronic Load

- ❒ Remove the jumper that is connected between J5008 and J5009 on the PA-Unit, then connect the Electronic Load to J5008 and GND.
- ❒ Set the VFO-A frequency to 14.200 MHz in the CW mode.
- ❒ Press and hold in the [1.8(1)], [3.5(2)], and [7(3)] keys, while turning the radio on, to enter the alignment mode.
- ❒ Rotate the Main Tuning Dial knob to select the alignment parameter "24-01 IDD MTR".
- ❒ Press the PTT button, then adjust the Electronic Load to "10 A".
- ❒ Press the [ENT] key, then release the PTT button.
- ❒ Press and hold in the [MENU] button for one second to save the new setting and exit the alignment mode.

2) Using a DC Ammeter

- ❒ Connect the 50-Ohm Dummy Load and Wattmeter to the "ANT 1" jack.
- ❒ Remove the jumper that is connected between J5008 and J5009 on the PA-Unit, then connect the DC ammeter (20-A range) between J5008 and J5009.
- ❒ Set the VFO-A frequency to 14.200 MHz in the CW mode.
- ❒ Press and hold in the [1.8(1)], [3.5(2)], and [7(3)] keys, while turning the radio on, to enter the alignment mode.
- ❒ Rotate the Main Tuning Dial knob to select the alignment parameter "24-01 IDD-MTR".
- ❒ Press the [MOX] button, then rotate the [PROC/CAR] knob so the DC ammeter reading is "10 amperes".
- ❒ Press the [ENT] key, then release the [MOX] button.
- ❒ Press and hold in the [MENU] button for one second to save the new setting and exit the alignment mode.

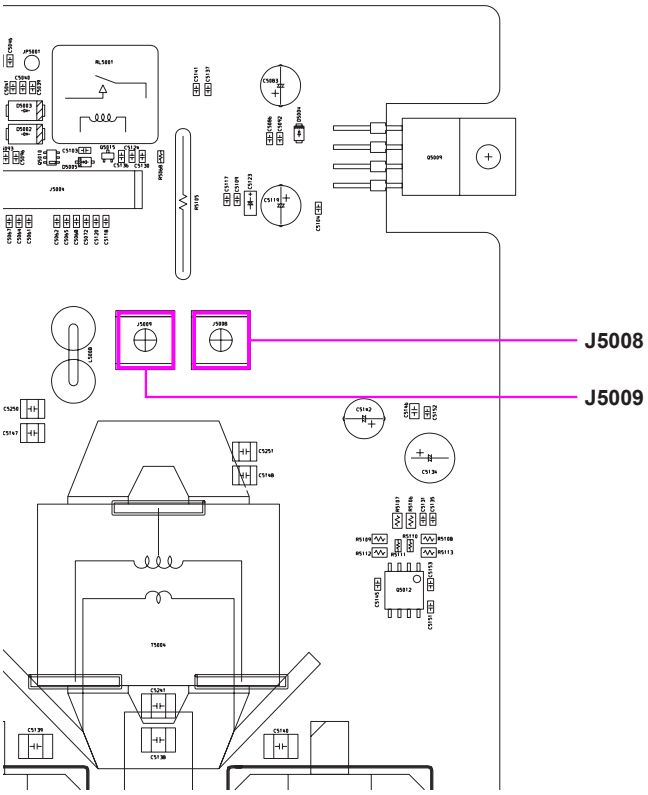

PA Unit Alignment Points

MAIN Unit
Circuit Diagram

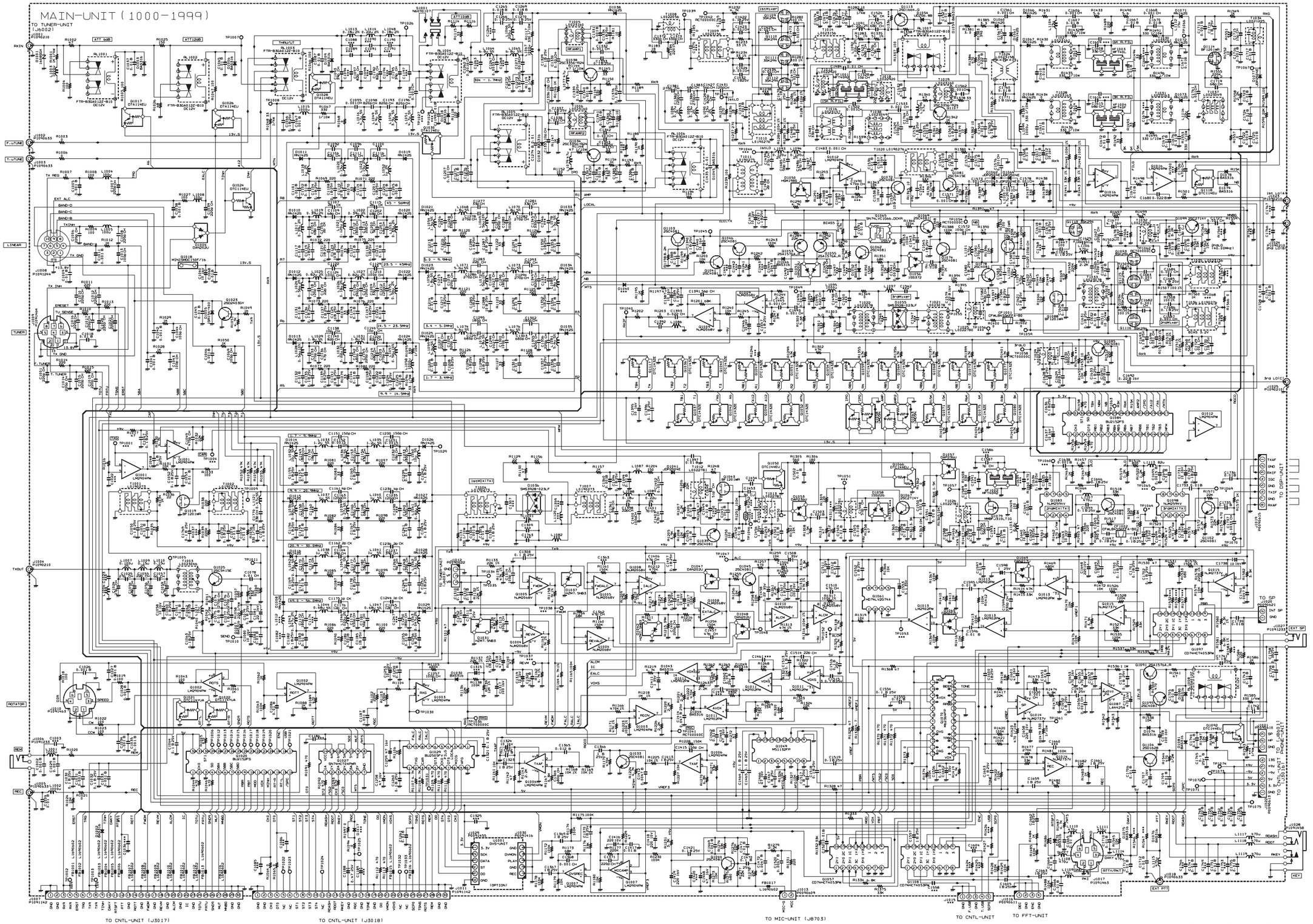

MAIN-1

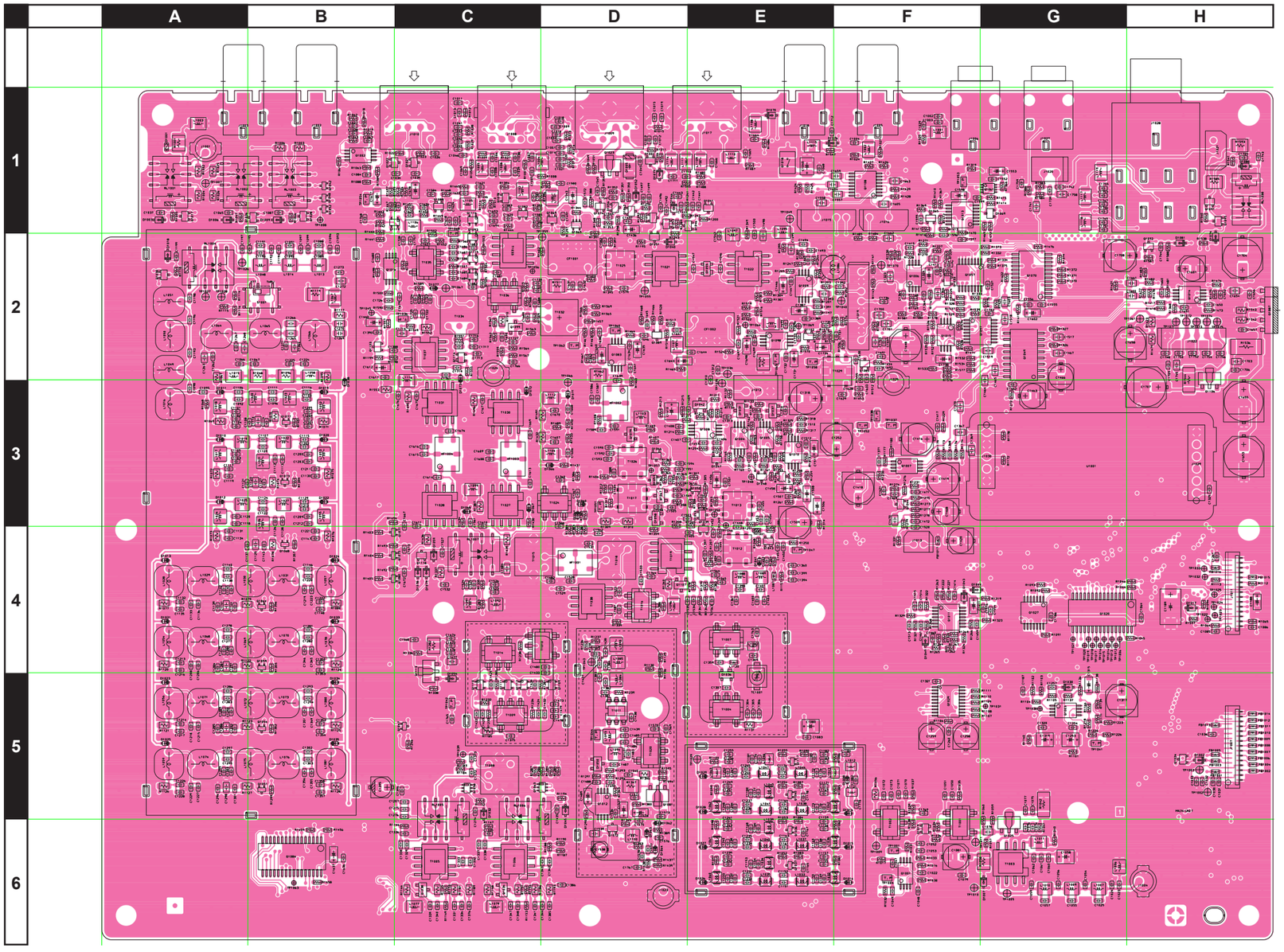
A
B
C
D
E
F
G
H
1
2
3
4
5
6

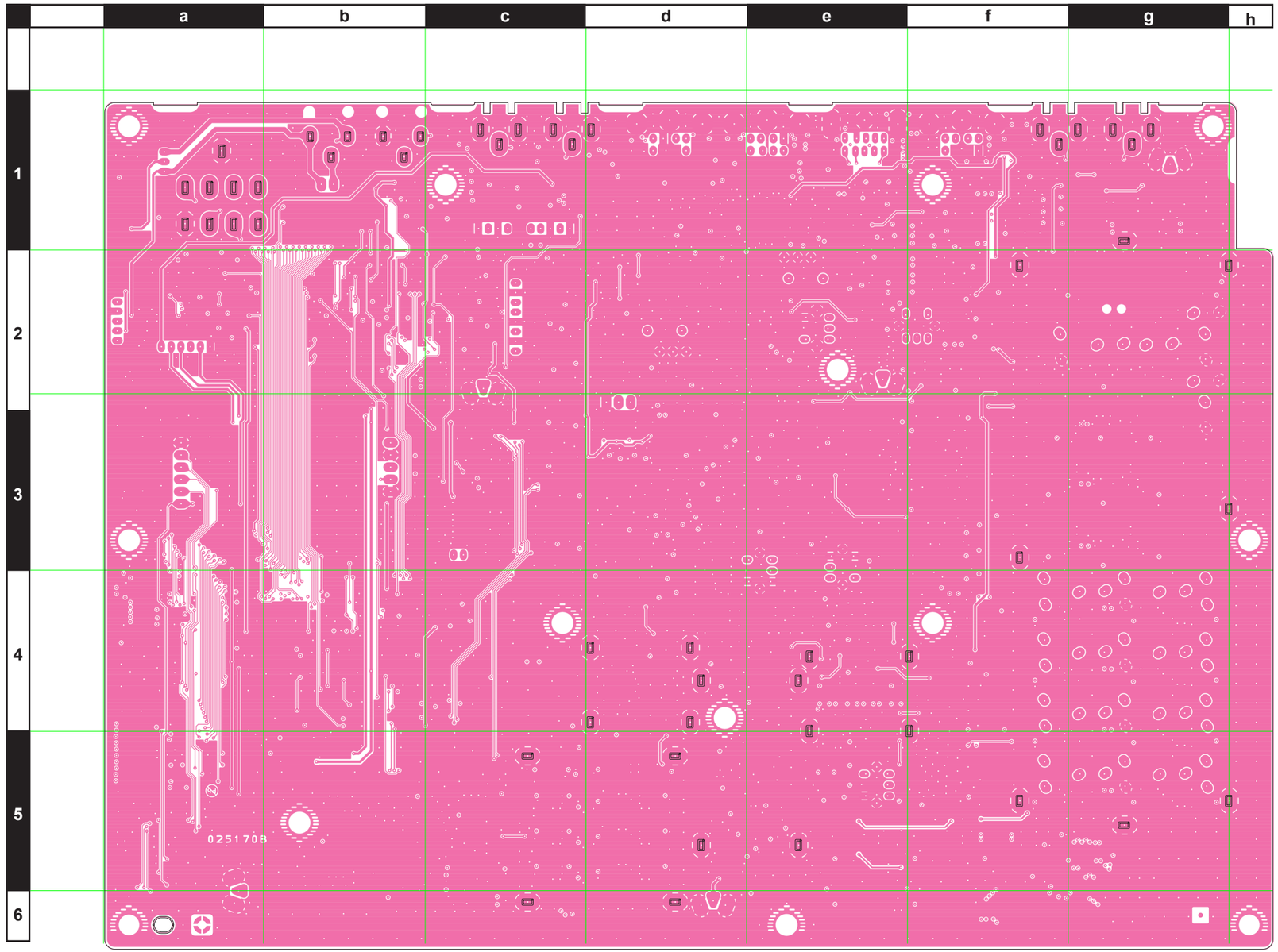
a
b
c
d
e
f
g
h
1
2
3
4
5
6
025170B

REF	DESCRIPTION	VALUE	V/W	TOL.	MFR'S DESIG	YAESU P/N	VERS.	LOT	SIDE	LAY ADR
	PCB with Components					CS2180701				
C 1001	CHIP CAP.	220pF	50V	CH	GRM1882C1H221JA01D	K22174243		1-	A	D1
C 1002	CHIP CAP.	0.001uF	50V	B	GRM188B11H102KA01D	K22174821		1-	A	F1
C 1004	CHIP CAP.	0.01uF	50V	B	GRM188B11H103KA01D	K22174823		1-	A	F1
C 1005	CHIP CAP.	0.001uF	50V	B	GRM188B11H102KA01D	K22174821		1-	A	C1
C 1006	CHIP CAP.	220pF	50V	CH	GRM1882C1H221JA01D	K22174243		1-	A	C1
C 1007	CHIP CAP.	220pF	50V	CH	GRM1882C1H221JA01D	K22174243		1-	A	C1
C 1008	CHIP CAP.	220pF	50V	CH	GRM1882C1H221JA01D	K22174243		1-	A	C1
C 1009	CHIP CAP.	0.01uF	50V	B	GRM188B11H103KA01D	K22174823		1-	A	D1
C 1010	CHIP CAP.	220pF	50V	CH	GRM1882C1H221JA01D	K22174243		1-	A	D1
C 1011	CHIP CAP.	0.001uF	50V	B	GRM188B11H102KA01D	K22174821		1-	A	C1
C 1012	CHIP CAP.	220pF	50V	CH	GRM1882C1H221JA01D	K22174243		1-	A	D1
C 1013	CHIP CAP.	100pF	50V	CH	GRM1882C1H101JA01D	K22174235		1-	A	C1
C 1014	CHIP CAP.	220pF	50V	CH	GRM1882C1H221JA01D	K22174243		1-	A	D1
C 1015	CHIP CAP.	220pF	50V	CH	GRM1882C1H221JA01D	K22174243		1-	A	D1
C 1016	CHIP CAP.	220pF	50V	CH	GRM1882C1H221JA01D	K22174243		1-	A	D1
C 1017	CHIP CAP.	220pF	50V	CH	GRM1882C1H221JA01D	K22174243		1-	A	D1
C 1018	CHIP CAP.	0.01uF	50V	B	GRM188B11H103KA01D	K22174823		1-	A	D1
C 1019	CHIP CAP.	220pF	50V	CH	GRM1882C1H221JA01D	K22174243		1-	A	D1
C 1020	CHIP CAP.	220pF	50V	CH	GRM1882C1H221JA01D	K22174243		1-	A	D1
C 1021	CHIP CAP.	220pF	50V	CH	GRM1882C1H221JA01D	K22174243		1-	A	D1
C 1024	CHIP CAP.	27pF	50V	CH	GRM1882C1H270JA01D	K22174221		1-	A	G6
C 1025	CHIP CAP.	27pF	50V	CH	GRM1882C1H270JA01D	K22174221		1-	A	G6
C 1026	CHIP CAP.	0.001uF	50V	B	GRM188B11H102KA01D	K22174821		1-	A	C1
C 1027	CHIP CAP.	0.001uF	50V	B	GRM188B11H102KA01D	K22174821		1-	A	B1
C 1028	CHIP CAP.	0.001uF	50V	B	GRM188B11H102KA01D	K22174821		1-	A	B1
C 1029	CHIP CAP.	0.001uF	50V	B	GRM188B11H102KA01D	K22174821		1-	A	F1
C 1030	CHIP CAP.	0.1uF	25V	B	GRM188B11E104KA01D	K22144814		1-	A	H5
C 1031	CHIP CAP.	0.001uF	50V	B	GRM188B11H102KA01D	K22174821		1-	A	H5
C 1032	CHIP CAP.	0.1uF	25V	B	GRM188B11E104KA01D	K22144814		1-	A	H5
C 1033	CHIP CAP.	0.001uF	50V	B	GRM188B11H102KA01D	K22174821		1-	A	H5
C 1034	CHIP CAP.	0.001uF	50V	B	GRM188B11H102KA01D	K22174821		1-	A	C1
C 1035	CHIP CAP.	0.001uF	50V	B	GRM188B11H102KA01D	K22174821		1-	A	C1
C 1037	CHIP CAP.	0.01uF	50V	B	GRM188B11H103KA01D	K22174823		1-	A	A1
C 1038	CHIP CAP.	0.001uF	50V	B	GRM188B11H102KA01D	K22174821		1-	A	C1
C 1039	CHIP CAP.	220pF	50V	CH	GRM1882C1H221JA01D	K22174243		1-	A	C1
C 1040	CHIP TA.CAP.	10uF	16V		TEESVB21C106M8R	K78120025		1-	A	E1
C 1041	CHIP CAP.	0.001uF	50V	B	GRM188B11H102KA01D	K22174821		1-	A	C1
C 1042	CHIP CAP.	0.001uF	50V	B	GRM188B11H102KA01D	K22174821		1-	A	C1
C 1043	CHIP CAP.	100pF	50V	CH	GRM1882C1H101JA01D	K22174235		1-	A	C1
C 1044	CHIP CAP.	100pF	50V	CH	GRM1882C1H101JA01D	K22174235		1-	A	C1
C 1045	CHIP CAP.	0.01uF	50V	B	GRM188B11H103KA01D	K22174823		1-	A	D1
C 1046	CHIP CAP.	0.001uF	50V	B	GRM188B11H102KA01D	K22174821		1-	A	C1
C 1047	CHIP CAP.	0.1uF	25V	B	GRM188B11E104KA01D	K22144814		1-	A	F6
C 1048	CHIP CAP.	0.1uF	25V	B	GRM188B11E104KA01D	K22144814		1-	A	F6
C 1049	CHIP CAP.	470pF	50V	CH	GRM1882C1H471JA01D	K22174249		1-	A	F6
C 1050	CHIP CAP.	0.1uF	25V	B	GRM188B11E104KA01D	K22144814		1-	A	F5
C 1051	CHIP CAP.	0.01uF	50V	B	GRM188B11H103KA01D	K22174823		1-	A	F5
C 1052	CHIP CAP.	0.1uF	25V	B	GRM188B11E104KA01D	K22144814		1-	A	F6
C 1053	CHIP CAP.	0.01uF	50V	B	GRM188B11H103KA01D	K22174823		1-	A	F6
C 1054	CHIP CAP.	68pF	50V	CH	GRM1882C1H680JA01D	K22174231		1-	A	G6
C 1055	CHIP CAP.	22pF	50V	CH	GRM1882C1H220JA01D	K22174219		1-	A	G6
C 1056	CHIP CAP.	82pF	50V	CH	GRM1882C1H820JA01D	K22174233		1-	A	G6
C 1057	CHIP CAP.	6pF	50V	CH	GRM1882C1H6R0DA01D	K22174207		1-	A	G6
C 1058	CHIP TA.CAP.	10uF	16V		TEESVB21C106M8R	K78120025		1-	A	G6
C 1059	CHIP CAP.	47pF	50V	CH	GRM1882C1H470JA01D	K22174227		1-	A	G6
C 1060	CHIP CAP.	0.1uF	25V	B	GRM188B11E104KA01D	K22144814		1-	A	G6
C 1061	CHIP CAP.	0.01uF	50V	B	GRM188B11H103KA01D	K22174823		1-	A	G6
C 1062	CHIP CAP.	0.001uF	50V	B	GRM188B11H102KA01D	K22174821		1-	A	G6
C 1063	CHIP CAP.	0.1uF	25V	B	GRM188B11E104KA01D	K22144814		1-	A	B1
C 1064	CHIP CAP.	0.1uF	25V	B	GRM188B11E104KA01D	K22144814		1-	A	H4
C 1065	CHIP CAP.	0.01uF	50V	B	GRM188B11H103KA01D	K22174823		1-	A	A1
C 1066	CHIP CAP.	0.1uF	25V	B	GRM188B11E104KA01D	K22144814		1-	A	A2
C 1067	CHIP CAP.	0.001uF	50V	B	GRM188B11H102KA01D	K22174821		1-	A	B2
C 1068	CHIP CAP.	0.01uF	50V	B	GRM188B11H103KA01D	K22174823		1-	A	E1
C 1069	CHIP CAP.	100pF	50V	CH	GRM1882C1H101JA01D	K22174235		1-	A	C1
C 1070	CHIP CAP.	0.1uF	25V	B	GRM188B11E104KA01D	K22144814		1-	A	F5
C 1071	CHIP CAP.	0.01uF	50V	B	GRM188B11H103KA01D	K22174823		1-	A	F5
C 1072	CHIP CAP.	0.01uF	50V	B	GRM188B11H103KA01D	K22174823		1-	A	F5
C 1073	CHIP CAP.	0.1uF	25V	B	GRM188B11E104KA01D	K22144814		1-	A	F5
C 1074	CHIP CAP.	270pF	50V	CH	GRM1882C1H271JA01D	K22174251		1-	A	G6
C 1075	CHIP CAP.	0.01uF	50V	B	GRM188B11H103KA01D	K22174823		1-	A	G5
C 1076	CHIP CAP.	270pF	50V	CH	GRM1882C1H271JA01D	K22174251		1-	A	G6

REF	DESCRIPTION	VALUE	V/W	TOL.	MFR'S DESIG	YAESU P/N	VERS.	LOT	SIDE	LAY ADR
C 1077	CHIP CAP.	0.1uF	25V	B	GRM188B11E104KA01D	K22144814		1-	A	G5
C 1078	CHIP CAP.	0.01uF	50V	CH	GRM2192C1H103JA01D	K22170291		1-	A	G6
C 1079	CHIP CAP.	0.1uF	25V	B	GRM188B11E104KA01D	K22144814		1-	A	F6
C 1080	CHIP TA.CAP.	10uF	16V		TEESVB21C106M8R	K78120025		1-	A	E5
C 1081	AL.ELECTRO.CAP.	22uF	16V		EEE1CA220SR	K48120024		1-	A	F6
C 1082	CHIP CAP.	33pF	50V	CH	GRM1882C1H330JA01D	K22174223		2-	A	F5
C 1083	CHIP CAP.	0.01uF	50V	B	GRM188B11H103KA01D	K22174823		1-	A	E5
C 1084	CHIP CAP.	0.01uF	50V	B	GRM188B11H103KA01D	K22174823		1-	A	B1
C 1087	CHIP CAP.	0.01uF	50V	B	GRM188B11H103KA01D	K22174823		1-	A	B1
C 1093	CHIP CAP.	39pF	50V	CH	GRM1882C1H390JA01D	K22174225		1-	A	B2
C 1095	CHIP CAP.	0.001uF	50V	CH	GRM1882C1H102JA01D	K22174275		1-	A	A3
C 1097	CHIP CAP.	82pF	50V	CH	GRM1882C1H820JA01D	K22174233		1-	A	B2
C 1098	CHIP CAP.	820pF	50V	CH	GRM1882C1H821JA01D	K22174283		1-	A	A3
C 1101	CHIP CAP.	0.001uF	50V	B	GRM188B11H102KA01D	K22174821		1-	A	A3
C 1102	CHIP CAP.	0.01uF	50V	B	GRM188B11H103KA01D	K22174823		1-	A	A3
C 1103	CHIP CAP.	68pF	50V	CH	GRM1882C1H680JA01D	K22174231		1-	A	A3
C 1104	CHIP CAP.	0.1uF	25V	B	GRM188B11E104KA01D	K22144814		1-	A	A3
C 1105	CHIP CAP.	2pF	50V	CK	GRM1884C1H2R0CA01D	K22174203		1-	A	A3
C 1106	CHIP CAP.	82pF	50V	CH	GRM1882C1H820JA01D	K22174233		1-	A	A3
C 1107	CHIP CAP.	2pF	50V	CK	GRM1884C1H2R0CA01D	K22174203		1-	A	B3
C 1108	CHIP CAP.	0.1uF	25V	B	GRM188B11E104KA01D	K22144814		1-	A	B3
C 1109	CHIP CAP.	68pF	50V	CH	GRM1882C1H680JA01D	K22174231		1-	A	B3
C 1110	CHIP CAP.	10uF	25V	B	CM21X5R106K25AT	K22148837		1-	A	B3
C 1111	CHIP CAP.	47pF	50V	CH	GRM1882C1H470JA01D	K22174227		1-	A	B3
C 1112	CHIP CAP.	180pF	50V	CH	GRM1882C1H181JA01D	K22174241		1-	A	B3
C 1113	CHIP CAP.	22pF	50V	CH	GRM1882C1H220JA01D	K22174219		1-	A	B3
C 1114	CHIP CAP.	0.01uF	50V	B	GRM188B11H103KA01D	K22174823		1-	A	B3
C 1115	CHIP CAP.	2pF	50V	CK	GRM1884C1H2R0CA01D	K22174203		1-	A	B3
C 1116	CHIP CAP.	82pF	50V	CH	GRM1882C1H820JA01D	K22174233		1-	A	B3
C 1117	CHIP CAP.	0.01uF	50V	B	GRM188B11H103KA01D	K22174823		1-	A	A3
C 1118	CHIP CAP.	120pF	50V	CH	GRM1882C1H121JA01D	K22174237		1-	A	A3
C 1119	CHIP CAP.	0.1uF	25V	B	GRM188B11E104KA01D	K22144814		1-	A	A3
C 1120	CHIP CAP.	22pF	50V	CH	GRM1882C1H220JA01D	K22174219		1-	A	A3
C 1121	CHIP CAP.	0.1uF	25V	B	GRM188B11E104KA01D	K22144814		1-	A	A3
C 1123	CHIP CAP.	10uF	25V	B	CM21X5R106K25AT	K22148837		1-	A	B3
C 1124	CHIP CAP.	100pF	50V	CH	GRM1882C1H101JA01D	K22174235		1-	A	B3
C 1125	CHIP CAP.	10uF	25V	B	CM21X5R106K25AT	K22148837		1-	A	B4
C 1126	CHIP CAP.	390pF	50V	CH	GRM1882C1H391JA01D	K22174255		1-	A	B3
C 1127	CHIP CAP.	0.01uF	50V	B	GRM188B11H103KA01D	K22174823		1-	A	B3
C 1128	CHIP CAP.	120pF	50V	CH	GRM1882C1H121JA01D	K22174237		1-	A	B3
C 1130	CHIP CAP.	0.1uF	25V	B	GRM188B11E104KA01D	K22144814		1-	A	B3
C 1131	CHIP CAP.	0.01uF	50V	B	GRM188B11H103KA01D	K22174823		1-	A	A4
C 1132	CHIP CAP.	0.01uF	50V	B	GRM188B11H103KA01D	K22174823		1-	A	A4
C 1133	CHIP CAP.	270pF	50V	CH	GRM1882C1H271JA01D	K22174251		1-	A	A4
C 1134	CHIP CAP.	0.1uF	25V	B	GRM188B11E104KA01D	K22144814		1-	A	A4
C 1135	CHIP CAP.	0.1uF	25V	B	GRM188B11E104KA01D	K22144814		1-	A	A4
C 1136	CHIP CAP.	47pF	50V	CH	GRM1882C1H470JA01D	K22174227		1-	A	A4
C 1137	CHIP CAP.	0.1uF	25V	B	GRM188B11E104KA01D	K22144814		1-	A	A4
C 1138	CHIP CAP.	10pF	50V	CH	GRM1882C1H100JA01D	K22174211		1-	A	A4
C 1139	CHIP CAP.	0.1uF	25V	B	GRM188B11E104KA01D	K22144814		1-	A	A4
C 1140	CHIP CAP.	82pF	50V	CH	GRM1882C1H820JA01D	K22174233		1-	A	A4
C 1141	CHIP CAP.	10uF	25V	B	CM21X5R106K25AT	K22148837		1-	A	A4
C 1142	CHIP CAP.	680pF	50V	CH	GRM1882C1H681JA01D	K22174274		1-	A	A4
C 1143	CHIP CAP.	0.01uF	50V	B	GRM188B11H103KA01D	K22174823		1-	A	B4
C 1144	CHIP CAP.	0.01uF	50V	B	GRM188B11H103KA01D	K22174823		1-	A	A4
C 1145	CHIP CAP.	220pF	50V	CH	GRM1882C1H221JA01D	K22174243		1-	A	A4
C 1146	CHIP CAP.	10pF	50V	CH	GRM1882C1H100JA01D	K22174211		1-	A	B4
C 1147	CHIP CAP.	0.1uF	25V	B	GRM188B11E104KA01D	K22144814		1-	A	B4
C 1148	CHIP CAP.	0.1uF	25V	B	GRM188B11E104KA01D	K22144814		1-	A	B4
C 1149	CHIP CAP.	180pF	50V	CH	GRM1882C1H181JA01D	K22174241		1-	A	E6
C 1150	CHIP CAP.	18pF	50V	CH	GRM1882C1H180JA01D	K22174217		1-	A	E6
C 1151	CHIP CAP.	150pF	50V	CH	GRM1882C1H151JA01D	K22174239		1-	A	E6
C 1152	CHIP CAP.	0.0015uF	50V	CH	GRM1882C1H152JA01D	K22174277		1-	A	E6
C 1153	CHIP CAP.	560pF	50V	CH	GRM1882C1H561JA01D	K22174273		1-	A	E6
C 1154	CHIP CAP.	33pF	50V	CH	GRM1882C1H330JA01D	K22174223		1-	A	E6
C 1155	CHIP CAP.	0.1uF	25V	B	GRM188B11E104KA01D	K22144814		1-	A	E6
C 1156	CHIP CAP.	0.1uF	25V	B	GRM188B11E104KA01D	K22144814		1-	A	E6
C 1157	CHIP CAP.	0.01uF	50V	B	GRM188B11H103KA01D	K22174823		1-	A	E6
C 1158	CHIP CAP.	150pF	50V	CH	GRM1882C1H151JA01D	K22174239		1-	A	E6
C 1159	CHIP CAP.	0.01uF	50V	B	GRM188B11H103KA01D	K22174823		1-	A	E5
C 1161	CHIP CAP.	4pF	50V	CH	GRM1882C1H4R0CA01D	K22174205		1-	A	E6
C 1162	CHIP CAP.	2pF	50V	CK	GRM1884C1H2R0CA01D	K22174203		1-	A	E5
C 1163	CHIP CAP.	120pF	50V	CH	GRM1882C1H121JA01D	K22174237		1-	A	E6

REF	DESCRIPTION	VALUE	V/W	TOL.	MFR'S DESIG	YAESU P/N	VERS.	LOT	SIDE	LAY ADR
C 1164	CHIP CAP.	39pF	50V	CH	GRM1882C1H390JA01D	K22174225		1-	A	E5
C 1165	CHIP CAP.	0.1uF	25V	B	GRM188B11E104KA01D	K22144814		1-	A	E6
C 1166	CHIP CAP.	390pF	50V	CH	GRM1882C1H391JA01D	K22174255		1-	A	E6
C 1167	CHIP CAP.	0.1uF	25V	B	GRM188B11E104KA01D	K22144814		1-	A	E6
C 1168	CHIP CAP.	68pF	50V	CH	GRM1882C1H680JA01D	K22174231		1-	A	E6
C 1169	CHIP CAP.	0.1uF	25V	B	GRM188B11E104KA01D	K22144814		1-	A	E5
C 1170	CHIP CAP.	120pF	50V	CH	GRM1882C1H121JA01D	K22174237		1-	A	E5
C 1171	CHIP CAP.	0.01uF	50V	B	GRM188B11H103KA01D	K22174823		1-	A	E5
C 1172	CHIP CAP.	180pF	50V	CH	GRM1882C1H181JA01D	K22174241		1-	A	E5
C 1173	CHIP CAP.	4pF	50V	CH	GRM1882C1H4R0CA01D	K22174205		1-	A	E5
C 1175	CHIP CAP.	1pF	50V	CK	GRM1884C1H1R0CA01D	K22174202		1-	A	E5
C 1176	CHIP CAP.	12pF	50V	CH	GRM1882C1H120JA01D	K22174213		1-	A	E5
C 1177	CHIP CAP.	390pF	50V	CH	GRM1882C1H391JA01D	K22174255		1-	A	E5
C 1178	CHIP CAP.	0.1uF	25V	B	GRM188B11E104KA01D	K22144814		1-	A	E5
C 1179	CHIP CAP.	330pF	50V	CH	GRM1882C1H331JA01D	K22174253		1-	A	E5
C 1180	CHIP CAP.	18pF	50V	CH	GRM1882C1H180JA01D	K22174217		1-	A	E5
C 1181	CHIP CAP.	56pF	50V	CH	GRM1882C1H560JA01D	K22174229		1-	A	E5
C 1182	CHIP CAP.	0.1uF	25V	B	GRM188B11E104KA01D	K22144814		1-	A	E5
C 1183	CHIP CAP.	0.01uF	50V	B	GRM188B11H103KA01D	K22174823		1-	A	E5
C 1184	CHIP CAP.	0.001uF	50V	B	GRM188B11H102KA01D	K22174821		1-	A	F5
C 1185	CHIP CAP.	0.1uF	25V	B	GRM188B11E104KA01D	K22144814		1-	A	E5
C 1187	CHIP CAP.	0.001uF	50V	B	GRM188B11H102KA01D	K22174821		1-	A	G5
C 1188	CHIP TA.CAP.	0.47uF	25V		TEESVA1E474M8R	K78140009		1-	A	H4
C 1192	CHIP CAP.	82pF	50V	CH	GRM1882C1H820JA01D	K22174233		1-	A	B2
C 1193	CHIP CAP.	820pF	50V	CH	GRM1882C1H821JA01D	K22174283		1-	A	A2
C 1195	CHIP CAP.	39pF	50V	CH	GRM1882C1H390JA01D	K22174225		1-	A	B2
C 1196	CHIP CAP.	820pF	50V	CH	GRM1882C1H821JA01D	K22174283		1-	A	A2
C 1198	CHIP CAP.	0.001uF	50V	CH	GRM1882C1H102JA01D	K22174275		1-	A	A2
C 1199	CHIP CAP.	0.01uF	50V	B	GRM188B11H103KA01D	K22174823		1-	A	A2
C 1200	CHIP CAP.	5pF	50V	CH	GRM1882C1H5R0CA01D	K22174206		1-	A	B3
C 1201	CHIP CAP.	0.1uF	25V	B	GRM188B11E104KA01D	K22144814		1-	A	B3
C 1202	CHIP CAP.	68pF	50V	CH	GRM1882C1H680JA01D	K22174231		1-	A	B3
C 1203	CHIP CAP.	68pF	50V	CH	GRM1882C1H680JA01D	K22174231		1-	A	B3
C 1204	CHIP CAP.	0.01uF	50V	B	GRM188B11H103KA01D	K22174823		1-	A	B3
C 1205	CHIP CAP.	0.001uF	50V	B	GRM188B11H102KA01D	K22174821		1-	A	B3
C 1207	CHIP CAP.	0.001uF	50V	CH	GRM1882C1H102JA01D	K22174275		1-	A	C5
C 1208	CHIP CAP.	330pF	50V	CH	GRM1882C1H331JA01D	K22174253		1-	A	A4
C 1209	CHIP CAP.	33pF	50V	CH	GRM1882C1H330JA01D	K22174223		1-	A	B3
C 1210	CHIP CAP.	100pF	50V	CH	GRM1882C1H101JA01D	K22174235		1-	A	B3
C 1211	CHIP CAP.	0.01uF	50V	B	GRM188B11H103KA01D	K22174823		1-	A	B3
C 1212	CHIP CAP.	120pF	50V	CH	GRM1882C1H121JA01D	K22174237		1-	A	B3
C 1213	CHIP CAP.	0.01uF	50V	B	GRM188B11H103KA01D	K22174823		1-	A	A4
C 1214	CHIP CAP.	0.01uF	50V	B	GRM188B11H103KA01D	K22174823		1-	A	A5
C 1216	CHIP CAP.	0.1uF	25V	B	GRM188B11E104KA01D	K22144814		1-	A	A4
C 1217	CHIP CAP.	0.1uF	25V	B	GRM188B11E104KA01D	K22144814		1-	A	A5
C 1218	CHIP CAP.	820pF	50V	CH	GRM1882C1H821JA01D	K22174283		1-	A	A5
C 1219	CHIP CAP.	68pF	50V	CH	GRM1882C1H680JA01D	K22174231		1-	A	B4
C 1220	CHIP CAP.	82pF	50V	CH	GRM1882C1H820JA01D	K22174233		1-	A	B4
C 1221	CHIP CAP.	0.01uF	50V	B	GRM188B11H103KA01D	K22174823		1-	A	B4
C 1222	CHIP CAP.	0.01uF	50V	B	GRM188B11H103KA01D	K22174823		1-	A	B4
C 1223	CHIP CAP.	270pF	50V	CH	GRM1882C1H271JA01D	K22174251		1-	A	B4
C 1224	CHIP CAP.	0.1uF	25V	B	GRM188B11E104KA01D	K22144814		1-	A	B2
C 1225	CHIP CAP.	0.001uF	50V	B	GRM188B11H102KA01D	K22174821		1-	A	B2
C 1226	CHIP CAP.	0.01uF	50V	B	GRM188B11H103KA01D	K22174823		1-	A	A5
C 1227	CHIP CAP.	220pF	50V	CH	GRM1882C1H221JA01D	K22174243		1-	A	A5
C 1228	CHIP CAP.	0.1uF	25V	B	GRM188B11E104KA01D	K22144814		1-	A	A5
C 1229	CHIP CAP.	820pF	50V	CH	GRM1882C1H821JA01D	K22174283		1-	A	A5
C 1230	CHIP CAP.	150pF	50V	CH	GRM1882C1H151JA01D	K22174239		1-	A	E6
C 1231	CHIP CAP.	0.0015uF	50V	CH	GRM1882C1H152JA01D	K22174277		1-	A	E6
C 1232	CHIP CAP.	18pF	50V	CH	GRM1882C1H180JA01D	K22174217		1-	A	E6
C 1233	CHIP CAP.	180pF	50V	CH	GRM1882C1H181JA01D	K22174241		1-	A	E6
C 1234	CHIP CAP.	4pF	50V	CH	GRM1882C1H4R0CA01D	K22174205		1-	A	E6
C 1235	CHIP CAP.	120pF	50V	CH	GRM1882C1H121JA01D	K22174237		1-	A	E6
C 1236	CHIP CAP.	2pF	50V	CK	GRM1884C1H2R0CA01D	K22174203		1-	A	E5
C 1237	CHIP CAP.	39pF	50V	CH	GRM1882C1H390JA01D	K22174225		1-	A	E5
C 1239	CHIP CAP.	0.01uF	50V	B	GRM188B11H103KA01D	K22174823		1-	A	E6
C 1240	CHIP CAP.	150pF	50V	CH	GRM1882C1H151JA01D	K22174239		1-	A	E6
C 1241	CHIP CAP.	0.01uF	50V	B	GRM188B11H103KA01D	K22174823		1-	A	E5
C 1242	CHIP CAP.	0.1uF	25V	B	GRM188B11E104KA01D	K22144814		1-	A	E6
C 1243	CHIP CAP.	0.1uF	25V	B	GRM188B11E104KA01D	K22144814		1-	A	E6
C 1244	CHIP CAP.	1pF	50V	CK	GRM1884C1H1R0CA01D	K22174202		1-	A	E5
C 1245	CHIP CAP.	12pF	50V	CH	GRM1882C1H120JA01D	K22174213		1-	A	E5
C 1246	CHIP CAP.	4pF	50V	CH	GRM1882C1H4R0CA01D	K22174205		1-	A	E5

REF	DESCRIPTION	VALUE	V/W	TOL.	MFR'S DESIG	YAESU P/N	VERS.	LOT	SIDE	LAY ADR
C 1248	CHIP CAP.	120pF	50V	CH	GRM1882C1H121JA01D	K22174237		1-	A	E5
C 1249	CHIP CAP.	0.01uF	50V	B	GRM188B11H103KA01D	K22174823		1-	A	E5
C 1250	CHIP CAP.	180pF	50V	CH	GRM1882C1H181JA01D	K22174241		1-	A	E5
C 1251	CHIP CAP.	0.1uF	25V	B	GRM188B11E104KA01D	K22144814		1-	A	E5
C 1252	AL.ELECTRO.CAP.	47uF	16V		EEE1CA470SP	K48120005		1-	A	F3
C 1253	CHIP TA.CAP.	10uF	16V		TEESVB21C106M8R	K78120025		1-	A	G5
C 1254	CHIP CAP.	0.01uF	50V	B	GRM188B11H103KA01D	K22174823		1-	A	G5
C 1255	CHIP CAP.	0.01uF	50V	B	GRM188B11H103KA01D	K22174823		1-	A	E5
C 1256	CHIP CAP.	0.1uF	25V	B	GRM188B11E104KA01D	K22144814		1-	A	E5
C 1257	CHIP CAP.	100pF	50V	CH	GRM1882C1H101JA01D	K22174235		1-	A	G5
C 1258	AL.ELECTRO.CAP.	47uF	16V		EEE1CA470WR	K48120025		1-	A	F5
C 1259	AL.ELECTRO.CAP.	47uF	16V		EEE1CA470WR	K48120025		1-	A	F5
C 1260	CHIP CAP.	0.1uF	25V	B	GRM188B11E104KA01D	K22144814		1-	A	F5
C 1261	CHIP CAP.	0.01uF	50V	B	GRM188B11H103KA01D	K22174823		1-	A	H4
C 1262	CHIP CAP.	0.0018uF	50V	CH	GRM1882C1H182JA01D	K22174278		1-	A	A2
C 1265	CHIP CAP.	0.018uF	50V	B	GRM216B11H183KA01D	K22170820		1-	A	B2
C 1266	CHIP CAP.	0.1uF	25V	B	GRM21BB11E104KA01L	K22140811		1-	A	B2
C 1267	CHIP CAP.	0.0033uF	50V	CH	GRM1882C1H332JA01D	K22174281		1-	A	A2
C 1269	CHIP CAP.	0.018uF	50V	B	GRM216B11H183KA01D	K22170820		1-	A	B2
C 1270	CHIP CAP.	0.1uF	25V	B	GRM21BB11E104KA01L	K22140811		1-	A	B2
C 1271	CHIP CAP.	0.0018uF	50V	CH	GRM1882C1H182JA01D	K22174278		1-	A	B2
C 1272	CHIP CAP.	1uF	25V	B	GRM21BB31E105KA98L	K22140826		1-	A	B2
C 1273	CHIP CAP.	0.1uF	25V	B	GRM188B11E104KA01D	K22144814		1-	A	B2
C 1274	CHIP CAP.	0.01uF	50V	B	GRM188B11H103JA01D	K22174824		1-	A	C5
C 1275	CHIP CAP.	0.01uF	50V	B	GRM188B11H103KA01D	K22174823		1-	A	C5
C 1276	CHIP CAP.	0.1uF	25V	B	GRM188B11E104KA01D	K22144814		1-	A	C5
C 1277	CHIP CAP.	33pF	50V	CH	GRM1882C1H330JA01D	K22174223		1-	A	A4
C 1278	CHIP CAP.	270pF	50V	CH	GRM1882C1H271JA01D	K22174251		1-	A	A4
C 1279	CHIP CAP.	820pF	50V	CH	GRM1882C1H821JA01D	K22174283		1-	A	A4
C 1280	CHIP CAP.	100pF	50V	CH	GRM1882C1H101JA01D	K22174235		1-	A	A4
C 1281	CHIP CAP.	33pF	50V	CH	GRM1882C1H330JA01D	K22174223		1-	A	B4
C 1282	CHIP CAP.	270pF	50V	CH	GRM1882C1H271JA01D	K22174251		1-	A	B4
C 1283	CHIP CAP.	22pF	50V	CH	GRM1882C1H220JA01D	K22174219		1-	A	A5
C 1284	CHIP CAP.	0.1uF	25V	B	GRM188B11E104KA01D	K22144814		1-	A	A4
C 1285	CHIP CAP.	0.1uF	25V	B	GRM188B11E104KA01D	K22144814		1-	A	A5
C 1286	CHIP CAP.	270pF	50V	CH	GRM1882C1H271JA01D	K22174251		1-	A	A5
C 1287	CHIP CAP.	10uF	25V	B	CM21X5R106K25AT	K22148837		1-	A	A4
C 1288	CHIP CAP.	10uF	25V	B	CM21X5R106K25AT	K22148837		1-	A	A5
C 1289	CHIP CAP.	0.0027uF	50V	CH	GRM1882C1H272JA01D	K22174280		1-	A	A5
C 1290	CHIP CAP.	180pF	50V	CH	GRM1882C1H181JA01D	K22174241		1-	A	A5
C 1291	CHIP CAP.	0.01uF	50V	B	GRM188B11H103KA01D	K22174823		1-	A	A4
C 1292	CHIP CAP.	0.01uF	50V	B	GRM188B11H103KA01D	K22174823		1-	A	A5
C 1293	CHIP CAP.	22pF	50V	CH	GRM1882C1H220JA01D	K22174219		1-	A	B5
C 1294	CHIP CAP.	270pF	50V	CH	GRM1882C1H271JA01D	K22174251		1-	A	B5
C 1295	CHIP CAP.	180pF	50V	CH	GRM1882C1H181JA01D	K22174241		1-	A	A5
C 1296	CHIP CAP.	0.1uF	25V	B	GRM188B11E104KA01D	K22144814		1-	A	A5
C 1297	CHIP CAP.	680pF	50V	CH	GRM1882C1H681JA01D	K22174274		1-	A	A5
C 1298	CHIP CAP.	10uF	25V	B	CM21X5R106K25AT	K22148837		1-	A	A5
C 1299	CHIP CAP.	0.0027uF	50V	CH	GRM1882C1H272JA01D	K22174280		1-	A	A5
C 1300	CHIP CAP.	100pF	50V	CH	GRM1882C1H101JA01D	K22174235		1-	A	A5
C 1301	CHIP CAP.	0.01uF	50V	B	GRM188B11H103KA01D	K22174823		1-	A	A5
C 1302	CHIP CAP.	180pF	50V	CH	GRM1882C1H181JA01D	K22174241		1-	A	B5
C 1303	CHIP CAP.	680pF	50V	CH	GRM1882C1H681JA01D	K22174274		1-	A	B5
C 1304	CHIP CAP.	0.001uF	50V	B	GRM188B11H102KA01D	K22174821		1-	A	E5
C 1305	CHIP CAP.	0.01uF	50V	B	GRM188B11H103KA01D	K22174823		1-	A	E5
C 1306	CHIP CAP.	0.1uF	25V	B	GRM188B11E104KA01D	K22144814		1-	A	E5
C 1307	CHIP CAP.	15pF	50V	CH	GRM1882C1H150JA01D	K22174215		2-	A	E5
C 1308	CHIP CAP.	0.1uF	25V	B	GRM188B11E104KA01D	K22144814		1-	A	E3
C 1310	CHIP CAP.	0.01uF	50V	B	GRM188B11H103KA01D	K22174823		1-	A	E2
C 1311	CHIP CAP.	0.1uF	25V	B	GRM188B11E104KA01D	K22144814		1-	A	E3
C 1312	CHIP CAP.	0.01uF	50V	B	GRM188B11H103KA01D	K22174823		1-	A	E2
C 1313	CHIP CAP.	100pF	50V	CH	GRM1882C1H101JA01D	K22174235		1-	A	E3
C 1314	CHIP CAP.	100pF	50V	CH	GRM1882C1H101JA01D	K22174235		1-	A	E3
C 1316	CHIP CAP.	0.1uF	25V	B	GRM188B11E104KA01D	K22144814		1-	A	E3
C 1317	AL.ELECTRO.CAP.	100uF	16V		EEE1CA101WP	K48120012		1-	A	G5
C 1318	AL.ELECTRO.CAP.	47uF	16V		EEE1CA470SP	K48120005		1-	A	E3
C 1319	CHIP TA.CAP.	10uF	16V		TEESVB21C106M8R	K78120025		1-	A	G5
C 1320	CHIP CAP.	0.01uF	50V	B	GRM188B11H103KA01D	K22174823		1-	A	G5
C 1321	CHIP CAP.	0.1uF	25V	B	GRM188B11E104KA01D	K22144814		1-	A	F5
C 1322	CHIP CAP.	0.01uF	50V	B	GRM188B11H103KA01D	K22174823		1-	A	F2
C 1323	CHIP CAP.	1uF	25V	B	GRM21BB31E105KA98L	K22140826		1-	A	F2
C 1324	CHIP TA.CAP.	10uF	16V		TEESVA1C106M8R	K78120077		1-	A	F2
C 1329	CHIP CAP.	0.1uF	25V	B	GRM188B11E104KA01D	K22144814		1-	A	C6

REF	DESCRIPTION	VALUE	V/W	TOL.	MFR'S DESIG	YAESU P/N	VERS.	LOT	SIDE	LAY ADR
C 1330	CHIP CAP.	0.001uF	50V	CH	GRM1882C1H102JA01D	K22174275		1-	A	C6
C 1331	CHIP CAP.	0.001uF	50V	B	GRM188B11H102KA01D	K22174821		1-	A	C6
C 1332	CHIP CAP.	0.001uF	50V	CH	GRM1882C1H102JA01D	K22174275		1-	A	C6
C 1333	CHIP CAP.	0.1uF	25V	B	GRM188B11E104KA01D	K22144814		1-	A	C6
C 1334	CHIP CAP.	0.1uF	25V	B	GRM188B11E104KA01D	K22144814		1-	A	C6
C 1335	CHIP CAP.	10pF	50V	CH	GRM1882C1H100JA01D	K22174211		1-	A	C6
C 1336	CHIP CAP.	10pF	50V	CH	GRM1882C1H100JA01D	K22174211		1-	A	C6
C 1337	CHIP CAP.	0.1uF	25V	B	GRM188B11E104KA01D	K22144814		1-	A	C6
C 1338	CHIP CAP.	0.001uF	50V	CH	GRM1882C1H102JA01D	K22174275		1-	A	C6
C 1339	CHIP CAP.	0.1uF	25V	B	GRM188B11E104KA01D	K22144814		1-	A	C6
C 1340	CHIP CAP.	0.001uF	50V	B	GRM188B11H102KA01D	K22174821		1-	A	C6
C 1341	CHIP CAP.	0.001uF	50V	B	GRM188B11H102KA01D	K22174821		1-	A	C6
C 1342	CHIP CAP.	0.001uF	50V	CH	GRM1882C1H102JA01D	K22174275		1-	A	D6
C 1343	CHIP CAP.	0.1uF	25V	B	GRM188B11E104KA01D	K22144814		1-	A	D6
C 1344	CHIP CAP.	0.1uF	25V	B	GRM188B11E104KA01D	K22144814		1-	A	D6
C 1345	CHIP CAP.	330pF	50V	CH	GRM1882C1H331JA01D	K22174253		1-	A	B4
C 1347	CHIP CAP.	0.1uF	25V	B	GRM188B11E104KA01D	K22144814		1-	A	C6
C 1348	CHIP CAP.	0.001uF	50V	B	GRM188B11H102KA01D	K22174821		1-	A	C6
C 1349	CHIP CAP.	820pF	50V	CH	GRM1882C1H821JA01D	K22174283		1-	A	B5
C 1350	CHIP CAP.	0.1uF	25V	B	GRM188B11E104KA01D	K22144814		1-	A	B4
C 1352	CHIP CAP.	0.1uF	25V	B	GRM188B11E104KA01D	K22144814		1-	A	B5
C 1353	CHIP CAP.	0.01uF	50V	B	GRM188B11H103KA01D	K22174823		1-	A	B4
C 1354	CHIP CAP.	0.01uF	50V	B	GRM188B11H103KA01D	K22174823		1-	A	B5
C 1355	CHIP CAP.	820pF	50V	CH	GRM1882C1H821JA01D	K22174283		1-	A	B5
C 1356	CHIP CAP.	220pF	50V	CH	GRM1882C1H221JA01D	K22174243		1-	A	B5
C 1357	CHIP CAP.	0.1uF	25V	B	GRM188B11E104KA01D	K22144814		1-	A	B5
C 1358	CHIP CAP.	0.01uF	50V	B	GRM188B11H103KA01D	K22174823		1-	A	B5
C 1360	CHIP CAP.	0.001uF	50V	B	GRM188B11H102KA01D	K22174821		1-	A	E4
C 1361	CHIP CAP.	39pF	50V	CH	GRM1882C1H390JA01D	K22174225		1-	A	E4
C 1362	CHIP CAP.	47pF	50V	CH	GRM1882C1H470JA01D	K22174227		1-	A	E3
C 1364	CHIP CAP.	680pF	50V	CH	GRM1882C1H681JA01D	K22174274		1-	A	F2
C 1365	CHIP CAP.	0.012uF	50V	B	GRM188B11H123KA01D	K22174825		1-	A	F2
C 1366	CHIP CAP.	1uF	25V	B	GRM21BB31E105KA98L	K22140826		1-	A	F2
C 1367	CHIP CAP.	1uF	25V	B	GRM21BB31E105KA98L	K22140826		1-	A	F3
C 1368	CHIP CAP.	0.001uF	50V	CH	GRM1882C1H102JA01D	K22174275		1-	A	F3
C 1369	CHIP CAP.	1uF	25V	B	GRM21BB31E105KA98L	K22140826		1-	A	F3
C 1370	CHIP CAP.	1uF	25V	B	GRM21BB31E105KA98L	K22140826		1-	A	F3
C 1371	CHIP CAP.	220pF	50V	CH	GRM1882C1H221JA01D	K22174243		1-	A	F3
C 1372	CHIP CAP.	330pF	50V	CH	GRM1882C1H331JA01D	K22174253		1-	A	C5
C 1373	CHIP CAP.	330pF	50V	CH	GRM1882C1H331JA01D	K22174253		1-	A	C5
C 1376	CHIP CAP.	0.1uF	25V	B	GRM188B11E104KA01D	K22144814		1-	A	C6
C 1381	CHIP CAP.	270pF	50V	CH	GRM1882C1H271JA01D	K22174251		1-	A	D5
C 1382	CHIP CAP.	120pF	50V	CH	GRM1882C1H121JA01D	K22174237		1-	A	D5
C 1383	CHIP CAP.	68pF	50V	CH	GRM1882C1H680JA01D	K22174231		1-	A	D5
C 1384	CHIP CAP.	270pF	50V	CH	GRM1882C1H271JA01D	K22174251		1-	A	D4
C 1385	CHIP CAP.	0.1uF	25V	B	GRM188B11E104KA01D	K22144814		1-	A	D6
C 1386	CHIP CAP.	0.01uF	50V	B	GRM188B11H103KA01D	K22174823		1-	A	D6
C 1387	CHIP TA.CAP.	10uF	16V		TEESVA1C106M8R	K78120077		1-	A	E2
C 1388	CHIP CAP.	0.01uF	50V	B	GRM188B11H103KA01D	K22174823		1-	A	B2
C 1389	CHIP CAP.	0.1uF	25V	B	GRM188B11E104KA01D	K22144814		1-	A	E2
C 1390	CHIP CAP.	0.1uF	25V	B	GRM188B11E104KA01D	K22144814		1-	A	B2
C 1391	CHIP CAP.	56pF	50V	CH	GRM1882C1H560JA01D	K22174229		1-	A	E2
C 1393	CHIP CAP.	0.022uF	50V	CH	GRM21B2C1H223JA01L	K22170292		1-	A	E2
C 1394	CHIP CAP.	0.1uF	25V	B	GRM188B11E104KA01D	K22144814		1-	A	E4
C 1395	AL.ELECTRO.CAP.	10uF	16V		RV4-16V100MD46-RR2	K48120018		1-	A	B5
C 1396	CHIP CAP.	0.1uF	25V	B	GRM188B11E104KA01D	K22144814		1-	A	C5
C 1397	CHIP CAP.	0.01uF	50V	B	GRM188B11H103KA01D	K22174823		1-	A	E4
C 1398	CHIP CAP.	22pF	50V	CH	GRM1882C1H220JA01D	K22174219		1-	A	E4
C 1399	CHIP CAP.	0.01uF	50V	B	GRM188B11H103KA01D	K22174823		1-	A	E4
C 1400	CHIP CAP.	100pF	50V	CH	GRM1882C1H101JA01D	K22174235		1-	A	E4
C 1401	CHIP CAP.	7pF	50V	CH	GRM1882C1H7R0DA01D	K22174208		1-	A	E4
C 1402	CHIP CAP.	0.001uF	50V	CH	GRM1882C1H102JA01D	K22174275		1-	A	E4
C 1403	CHIP CAP.	47pF	50V	CH	GRM1882C1H470JA01D	K22174227		1-	A	E4
C 1404	CHIP CAP.	0.01uF	50V	B	GRM188B11H103KA01D	K22174823		1-	A	E4
C 1405	CHIP CAP.	0.01uF	50V	B	GRM188B11H103KA01D	K22174823		1-	A	E4
C 1406	CHIP CAP.	47pF	50V	CH	GRM1882C1H470JA01D	K22174227		1-	A	E3
C 1407	CHIP CAP.	0.1uF	25V	B	GRM188B11E104KA01D	K22144814		1-	A	D3
C 1408	CHIP CAP.	0.1uF	25V	B	GRM188B11E104KA01D	K22144814		1-	A	D3
C 1409	CHIP CAP.	220pF	50V	CH	GRM1882C1H221JA01D	K22174243		1-	A	E3
C 1410	CHIP TA.CAP.	10uF	16V		TEESVB21C106M8R	K78120025		1-	A	D3
C 1411	CHIP TA.CAP.	1uF	35V		TEESVA1V105M8R	K78160032		1-	A	F4
C 1412	CHIP CAP.	0.0047uF	50V	B	GRM188B11H472KA01D	K22174833		1-	A	F2
C 1413	CHIP CAP.	1uF	25V	B	GRM21BB31E105KA98L	K22140826		1-	A	F2

REF	DESCRIPTION	VALUE	V/W	TOL.	MFR'S DESIG	YAESU P/N	VERS.	LOT	SIDE	LAY ADR
C 1414	CHIP CAP.	0.047uF	25V	B	GRM188B11E473KA01D	K22144811		1-	A	F4
C 1415	CHIP CAP.	150pF	50V	CH	GRM1882C1H151JA01D	K22174239		1-	A	F2
C 1416	AL.ELECTRO.CAP.	220uF	10V		RV3-10V221MF80-R	K48100002		1-	A	F3
C 1417	CHIP CAP.	0.01uF	50V	B	GRM188B11H103KA01D	K22174823		1-	A	F3
C 1418	AL.ELECTRO.CAP.	220uF	10V		RV3-10V221MF80-R	K48100002		1-	A	F3
C 1419	AL.ELECTRO.CAP.	220uF	16V		EMVA160ADA221MF80G	K48120021		1-	A	F3
C 1421	CHIP CAP.	0.1uF	25V	B	GRM188B11E104KA01D	K22144814		1-	A	F3
C 1422	CHIP CAP.	0.1uF	25V	B	GRM188B11E104KA01D	K22144814		1-	A	C5
C 1423	CHIP CAP.	0.001uF	50V	CH	GRM1882C1H102JA01D	K22174275		1-	A	C5
C 1424	CHIP CAP.	0.001uF	50V	CH	GRM1882C1H102JA01D	K22174275		1-	A	C5
C 1425	CHIP CAP.	0.001uF	50V	CH	GRM1882C1H102JA01D	K22174275		1-	A	C5
C 1427	CHIP CAP.	56pF	50V	CH	GRM1882C1H560JA01D	K22174229		1-	A	D4
C 1428	CHIP CAP.	820pF	50V	CH	GRM1882C1H821JA01D	K22174283		1-	A	D4
C 1431	CHIP CAP.	120pF	50V	CH	GRM1882C1H121JA01D	K22174237		1-	A	D4
C 1432	CHIP CAP.	0.1uF	25V	B	GRM188B11E104KA01D	K22144814		1-	A	D5
C 1433	CHIP CAP.	0.001uF	50V	B	GRM188B11H102KA01D	K22174821		1-	A	D4
C 1434	CHIP CAP.	0.001uF	50V	CH	GRM1882C1H102JA01D	K22174275		1-	A	C5
C 1435	CHIP CAP.	0.01uF	50V	B	GRM188B11H103JA01D	K22174824		1-	A	D5
C 1436	CHIP TA.CAP.	10uF	16V		TEESVA1C106M8R	K78120077		1-	A	D1
C 1437	CHIP CAP.	0.1uF	25V	B	GRM188B11E104KA01D	K22144814		1-	A	D1
C 1438	CHIP CAP.	2pF	50V	CK	GRM1884C1H2R0CA01D	K22174203		1-	A	D5
C 1439	CHIP CAP.	27pF	50V	CH	GRM1882C1H270JA01D	K22174221		1-	A	D5
C 1440	CHIP TA.CAP.	10uF	16V		TEESVA1C106M8R	K78120077		1-	A	B2
C 1444	CHIP CAP.	0.0047uF	50V	B	GRM188B11H472KA01D	K22174833		1-	A	D1
C 1445	CHIP CAP.	0.001uF	50V	CH	GRM1882C1H102JA01D	K22174275		1-	A	E2
C 1446	CHIP TA.CAP.	10uF	16V		TEESVA1C106M8R	K78120077		1-	A	E2
C 1447	CHIP CAP.	0.1uF	25V	B	GRM188B11E104KA01D	K22144814		1-	A	E2
C 1448	CHIP CAP.	51pF	50V	CH	GRM1882C1H510JZ01D	K22174228		1-	A	E3
C 1449	CHIP CAP.	0.01uF	50V	B	GRM188B11H103KA01D	K22174823		1-	A	E4
C 1451	CHIP CAP.	0.001uF	50V	B	GRM188B11H102KA01D	K22174821		1-	A	E4
C 1452	CHIP CAP.	0.01uF	50V	B	GRM188B11H103KA01D	K22174823		1-	A	E4
C 1453	CHIP CAP.	3pF	50V	CJ	GRM1883C1H3R0CA01D	K22174204		1	A	E3
C 1454	CHIP CAP.	10pF	50V	CH	GRM1882C1H100JA01D	K22174211		2-	A	E3
C 1455	CHIP CAP.	51pF	50V	CH	GRM1882C1H510JZ01D	K22174228		1-	A	E3
C 1456	CHIP TA.CAP.	1uF	35V		TEESVA1V105M8R	K78160032		1-	A	E3
C 1457	CHIP CAP.	47pF	50V	CH	GRM1882C1H470JA01D	K22174227		1-	A	E3
C 1458	CHIP TA.CAP.	0.22uF	35V		TMCSA1V224MTRF	K78160027		1-	A	E3
C 1460	CHIP CAP.	0.047uF	25V	B	GRM188B11E473KA01D	K22144811		1-	A	F4
C 1462	CHIP CAP.	0.01uF	50V	B	GRM188B11H103KA01D	K22174823		1-	A	G3
C 1463	AL.ELECTRO.CAP.	47uF	16V		EEE1CA470WR	K48120025		1-	A	G3
C 1464	CHIP CAP.	0.1uF	25V	B	GRM21BB11E104KA01L	K22140811		1-	A	G2
C 1465	CHIP CAP.	0.1uF	25V	B	GRM21BB11E104KA01L	K22140811		1-	A	G2
C 1466	AL.ELECTRO.CAP.	47uF	16V		EEE1CA470WR	K48120025		1-	A	G2
C 1467	CHIP CAP.	1uF	25V	B	GRM21BB31E105KA98L	K22140826		1-	A	G2
C 1468	AL.ELECTRO.CAP.	47uF	16V		EEE1CA470WR	K48120025		1-	A	F3
C 1469	CHIP CAP.	0.001uF	50V	B	GRM188B11H102KA01D	K22174821		1-	A	F3
C 1470	CHIP CAP.	0.1uF	25V	B	GRM21BB11E104KA01L	K22140811		1-	A	F3
C 1471	CHIP CAP.	0.01uF	50V	B	GRM188B11H103KA01D	K22174823		1-	A	F3
C 1472	CHIP CAP.	0.0047uF	50V	B	GRM188B11H472KA01D	K22174833		1-	A	F3
C 1473	CHIP CAP.	0.001uF	50V	CH	GRM1882C1H102JA01D	K22174275		1-	A	D5
C 1474	CHIP CAP.	0.001uF	50V	B	GRM188B11H102KA01D	K22174821		1-	A	C4
C 1475	CHIP CAP.	0.01uF	50V	B	GRM188B11H103KA01D	K22174823		1-	A	C4
C 1476	CHIP CAP.	0.1uF	25V	B	GRM188B11E104KA01D	K22144814		1-	A	C4
C 1477	CHIP CAP.	10uF	25V	B	CM21X5R106K25AT	K22148837		1-	A	C4
C 1478	CHIP CAP.	0.1uF	25V	B	GRM188B11E104KA01D	K22144814		1-	A	D5
C 1479	CHIP CAP.	0.001uF	50V	CH	GRM1882C1H102JA01D	K22174275		1-	A	D5
C 1480	CHIP CAP.	0.1uF	25V	B	GRM188B11E104KA01D	K22144814		1-	A	D4
C 1481	CHIP CAP.	33pF	50V	CH	GRM1882C1H330JA01D	K22174223		1-	A	D4
C 1482	CHIP CAP.	22pF	50V	CH	GRM1882C1H220JA01D	K22174219		1-	A	D4
C 1483	CHIP CAP.	0.001uF	50V	CH	GRM1882C1H102JA01D	K22174275		1-	A	D5
C 1484	CHIP CAP.	0.01uF	50V	CH	GRM2192C1H103JA01D	K22170291		1-	A	C4
C 1485	CHIP CAP.	56pF	50V	CH	GRM1882C1H560JA01D	K22174229		1-	A	D5
C 1486	CHIP CAP.	27pF	50V	CH	GRM1882C1H270JA01D	K22174221		1-	A	D5
C 1487	CHIP CAP.	10pF	50V	CH	GRM1882C1H100JA01D	K22174211		1-	A	D5
C 1488	CHIP CAP.	0.01uF	50V	B	GRM188B11H103KA01D	K22174823		1-	A	D5
C 1489	CHIP TA.CAP.	1uF	35V		TEESVA1V105M8R	K78160032		1-	A	D5
C 1490	CHIP CAP.	470pF	50V	CH	GRM1882C1H471JA01D	K22174249		1-	A	D5
C 1491	CHIP CAP.	0.01uF	50V	B	GRM188B11H103KA01D	K22174823		1-	A	D1
C 1493	CHIP CAP.	0.001uF	50V	CH	GRM1882C1H102JA01D	K22174275		1-	A	E2
C 1494	CHIP CAP.	0.001uF	50V	CH	GRM1882C1H102JA01D	K22174275		1-	A	E2
C 1495	CHIP CAP.	0.022uF	50V	CH	GRM21B2C1H223JA01L	K22170292		1-	A	E2
C 1496	CHIP CAP.	0.0022uF	50V	CH	GRM1882C1H222JA01D	K22174279		1-	A	D1
C 1498	CHIP CAP.	0.01uF	50V	CH	GRM2192C1H103JA01D	K22170291		1-	A	E1

REF	DESCRIPTION	VALUE	V/W	TOL.	MFR'S DESIG	YAESU P/N	VERS.	LOT	SIDE	LAY ADR
C 1501	CHIP CAP.	0.01uF	50V	B	GRM188B11H103KA01D	K22174823		1-	A	E3
C 1502	CHIP CAP.	0.01uF	50V	B	GRM188B11H103KA01D	K22174823		1-	A	E3
C 1503	CHIP CAP.	0.001uF	50V	B	GRM188B11H102KA01D	K22174821		1-	A	E3
C 1504	CHIP CAP.	0.01uF	50V	B	GRM188B11H103KA01D	K22174823		1-	A	D3
C 1505	CHIP CAP.	0.01uF	50V	B	GRM188B11H103KA01D	K22174823		1-	A	D3
C 1507	CHIP CAP.	0.1uF	25V	B	GRM188B11E104KA01D	K22144814		1-	A	E3
C 1508	CHIP TA.CAP.	1uF	35V		TEESVA1V105M8R	K78160032		1-	A	E3
C 1509	AL.ELECTRO.CAP.	100uF	16V		EEE1CA101WP	K48120012		1-	A	E3
C 1510	CHIP CAP.	47pF	50V	CH	GRM1882C1H470JA01D	K22174227		1-	A	E3
C 1511	CHIP TA.CAP.	10uF	16V		TEESVA1C106M8R	K78120077		1-	A	E3
C 1512	CHIP CAP.	0.01uF	50V	B	GRM188B11H103KA01D	K22174823		1-	A	E3
C 1513	CHIP CAP.	0.1uF	25V	B	GRM188B11E104KA01D	K22144814		1-	A	F4
C 1514	CHIP CAP.	22pF	50V	CH	GRM1882C1H220JA01D	K22174219		1-	A	F4
C 1515	CHIP CAP.	0.1uF	25V	B	GRM188B11E104KA01D	K22144814		1-	A	F4
C 1516	CHIP CAP.	0.1uF	25V	B	GRM188B11E104KA01D	K22144814		1-	A	G4
C 1517	CHIP CAP.	1uF	25V	B	GRM21BB31E105KA98L	K22140826		1-	A	G2
C 1518	CHIP CAP.	0.1uF	25V	B	GRM21BB11E104KA01L	K22140811		1-	A	G2
C 1519	CHIP CAP.	0.1uF	25V	B	GRM21BB11E104KA01L	K22140811		1-	A	G2
C 1520	CHIP CAP.	0.0047uF	50V	B	GRM188B11H472KA01D	K22174833		1-	A	F3
C 1521	CHIP CAP.	0.01uF	50V	B	GRM188B11H103KA01D	K22174823		1-	A	G2
C 1522	CHIP CAP.	0.001uF	50V	CH	GRM1882C1H102JA01D	K22174275		1-	A	D4
C 1523	CHIP CAP.	68pF	50V	CH	GRM1882C1H680JA01D	K22174231		1-	A	C4
C 1524	CHIP CAP.	1.5pF	50V	CK	GRM1884C1H1R5CA01D	K22174258		1-	A	C4
C 1525	CHIP CAP.	68pF	50V	CH	GRM1882C1H680JA01D	K22174231		1-	A	C4
C 1526	CHIP CAP.	1.5pF	50V	CK	GRM1884C1H1R5CA01D	K22174258		1-	A	C4
C 1527	CHIP CAP.	0.01uF	50V	B	GRM188B11H103JA01D	K22174824		1-	A	C4
C 1528	CHIP CAP.	10pF	50V	CH	GRM1882C1H100JA01D	K22174211		1-	A	D4
C 1529	CHIP CAP.	100pF	50V	CH	GRM1882C1H101JA01D	K22174235		1-	A	D4
C 1531	CHIP CAP.	22pF	50V	CH	GRM1882C1H220JA01D	K22174219		1-	A	D4
C 1532	CHIP CAP.	0.01uF	50V	B	GRM188B11H103JA01D	K22174824		1-	A	C4
C 1533	CHIP CAP.	0.001uF	50V	CH	GRM1882C1H102JA01D	K22174275		1-	A	D4
C 1534	CHIP CAP.	0.1uF	25V	B	GRM188B11E104KA01D	K22144814		1-	A	E4
C 1535	CHIP CAP.	0.001uF	50V	B	GRM188B11H102KA01D	K22174821		1-	A	E4
C 1536	CHIP CAP.	0.01uF	50V	B	GRM188B11H103KA01D	K22174823		1-	A	D5
C 1537	CHIP TA.CAP.	10uF	16V		TEESVA1C106M8R	K78120077		1-	A	D5
C 1538	AL.ELECTRO.CAP.	10uF	16V		EEE1CS100SR	K48120023		1-	A	D6
C 1539	CHIP CAP.	10uF	25V	B	CM21X5R106K25AT	K22148837		1-	A	D6
C 1541	CHIP CAP.	0.0033uF	50V	CH	GRM1882C1H332JA01D	K22174281		1-	A	D1
C 1543	CHIP TA.CAP.	0.1uF	35V		TEESVA1V104M8R	K78160025		1-	A	D1
C 1544	CHIP CAP.	0.01uF	50V	B	GRM188B11H103KA01D	K22174823		1-	A	D1
C 1545	CHIP CAP.	0.1uF	25V	B	GRM188B11E104KA01D	K22144814		1-	A	D1
C 1548	CHIP CAP.	51pF	50V	CH	GRM1882C1H510JZ01D	K22174228		1-	A	D3
C 1549	CHIP CAP.	0.01uF	50V	B	GRM188B11H103KA01D	K22174823		1-	A	D3
C 1550	CHIP CAP.	0.001uF	50V	B	GRM188B11H102KA01D	K22174821		1-	A	D3
C 1551	CHIP CAP.	0.01uF	50V	B	GRM188B11H103KA01D	K22174823		1-	A	D3
C 1552	CHIP CAP.	0.1uF	25V	B	GRM188B11E104KA01D	K22144814		1-	A	G1
C 1553	CHIP TA.CAP.	0.1uF	35V		TEESVA1V104M8R	K78160025		1-	A	G1
C 1554	CHIP CAP.	0.1uF	25V	B	GRM188B11E104KA01D	K22144814		1-	A	G4
C 1555	CHIP CAP.	0.01uF	50V	B	GRM188B11H103KA01D	K22174823		1-	A	G2
C 1556	CHIP CAP.	0.01uF	50V	B	GRM188B11H103KA01D	K22174823		1-	A	G2
C 1557	CHIP CAP.	1uF	25V	B	GRM21BB31E105KA98L	K22140826		1-	A	F1
C 1561	CHIP CAP.	0.001uF	50V	CH	GRM1882C1H102JA01D	K22174275		1-	A	C3
C 1562	CHIP CAP.	0.001uF	50V	CH	GRM1882C1H102JA01D	K22174275		1-	A	D4
C 1563	CHIP CAP.	0.1uF	25V	B	GRM188B11E104KA01D	K22144814		1-	A	E4
C 1564	CHIP CAP.	0.001uF	50V	B	GRM188B11H102KA01D	K22174821		1-	A	E4
C 1565	CHIP CAP.	0.1uF	25V	B	GRM188B11E104KA01D	K22144814		1-	A	E4
C 1566	CHIP CAP.	0.022uF	50V	B	GRM188B11H223KA01D	K22174839		1-	A	D3
C 1567	CHIP CAP.	6pF	50V	CH	GRM1882C1H6R0DA01D	K22174207		1-	A	D3
C 1568	CHIP CAP.	0.01uF	50V	B	GRM188B11H103KA01D	K22174823		1-	A	C4
C 1569	CHIP CAP.	0.001uF	50V	B	GRM188B11H102KA01D	K22174821		1-	A	D5
C 1570	CHIP CAP.	0.1uF	25V	B	GRM188B11E104KA01D	K22144814		1-	A	D5
C 1571	CHIP CAP.	0.001uF	50V	CH	GRM1882C1H102JA01D	K22174275		1-	A	D5
C 1572	CHIP CAP.	100pF	50V	CH	GRM1882C1H101JA01D	K22174235		1-	A	D1
C 1573	CHIP CAP.	0.001uF	50V	CH	GRM1882C1H102JA01D	K22174275		1-	A	D5
C 1574	CHIP TA.CAP.	0.1uF	35V		TEESVA1V104M8R	K78160025		1-	A	D5
C 1575	CHIP CAP.	0.01uF	50V	B	GRM188B11H103KA01D	K22174823		1-	A	D5
C 1576	CHIP CAP.	0.001uF	50V	CH	GRM1882C1H102JA01D	K22174275		1-	A	D6
C 1577	CHIP CAP.	0.001uF	50V	CH	GRM1882C1H102JA01D	K22174275		1-	A	D6
C 1578	CHIP CAP.	0.001uF	50V	CH	GRM1882C1H102JA01D	K22174275		1-	A	D6
C 1579	CHIP CAP.	0.22uF	16V	B	GRM188B11C224KA01D	K22124815		1-	A	D2
C 1580	CHIP CAP.	0.1uF	25V	B	GRM188B11E104KA01D	K22144814		1-	A	D1
C 1581	CHIP CAP.	270pF	50V	CH	GRM1882C1H271JA01D	K22174251		1-	A	C1
C 1582	CHIP CAP.	82pF	50V	CH	GRM1882C1H820JA01D	K22174233		1-	A	D2

REF	DESCRIPTION	VALUE	V/W	TOL.	MFR'S DESIG	YAESU P/N	VERS.	LOT	SIDE	LAY ADR
C 1583	CHIP CAP.	0.1uF	25V	B	GRM188B11E104KA01D	K22144814		1-	A	C1
C 1584	CHIP CAP.	0.1uF	25V	B	GRM188B11E104KA01D	K22144814		1-	A	C1
C 1585	CHIP CAP.	0.01uF	50V	B	GRM188B11H103KA01D	K22174823		1-	A	C1
C 1587	CHIP CAP.	7pF	50V	CH	GRM1882C1H7R0DA01D	K22174208		1-	A	D3
C 1588	CHIP CAP.	0.01uF	50V	B	GRM188B11H103KA01D	K22174823		1-	A	D3
C 1589	CHIP CAP.	0.001uF	50V	B	GRM188B11H102KA01D	K22174821		1-	A	D3
C 1590	CHIP CAP.	0.01uF	50V	B	GRM188B11H103KA01D	K22174823		1-	A	D3
C 1592	CHIP CAP.	56pF	50V	CH	GRM1882C1H560JA01D	K22174229		1-	A	D3
C 1594	CHIP CAP.	0.01uF	50V	B	GRM188B11H103KA01D	K22174823		1-	A	D3
C 1595	CHIP CAP.	0.01uF	50V	B	GRM188B11H103KA01D	K22174823		1-	A	F1
C 1596	CHIP CAP.	0.01uF	50V	B	GRM188B11H103KA01D	K22174823		1-	A	F1
C 1597	CHIP CAP.	0.01uF	50V	B	GRM188B11H103KA01D	K22174823		1-	A	F2
C 1598	CHIP TA.CAP.	1uF	25V		TEESVA1E105M8R	K78140013		1-	A	F1
C 1599	CHIP CAP.	330pF	50V	CH	GRM1882C1H331JA01D	K22174253		1-	A	F1
C 1600	CHIP CAP.	1uF	25V	B	GRM21BB31E105KA98L	K22140826		1-	A	H2
C 1601	AL.ELECTRO.CAP.	47uF	16V		EEE1CA470WR	K48120025		1-	A	H2
C 1602	CHIP TA.CAP.	1uF	35V		TEESVA1V105M8R	K78160032		1-	A	G2
C 1603	CHIP CAP.	1uF	25V	B	GRM21BB31E105KA98L	K22140826		1-	A	G2
C 1605	CHIP CAP.	1uF	25V	B	GRM21BB31E105KA98L	K22140826		1-	A	F1
C 1606	CHIP CAP.	0.001uF	50V	CH	GRM1882C1H102JA01D	K22174275		1-	A	D3
C 1607	CHIP CAP.	0.01uF	50V	B	GRM188B11H103KA01D	K22174823		1-	A	D3
C 1608	CHIP CAP.	33pF	50V	CH	GRM1882C1H330JA01D	K22174223		1-	A	C3
C 1610	CHIP CAP.	0.01uF	50V	B	GRM188B11H103KA01D	K22174823		1-	A	C3
C 1611	CHIP CAP.	0.01uF	50V	B	GRM188B11H103KA01D	K22174823		1-	A	C3
C 1612	CHIP TA.CAP.	10uF	16V		TEESVA1C106M8R	K78120077		1-	A	B2
C 1615	CHIP CAP.	68pF	50V	CH	GRM1882C1H680JA01D	K22174231		1-	A	C3
C 1617	CHIP CAP.	0.01uF	50V	B	GRM188B11H103KA01D	K22174823		1-	A	B2
C 1618	CHIP CAP.	0.001uF	50V	B	GRM188B11H102KA01D	K22174821		1-	A	C1
C 1619	CHIP CAP.	0.1uF	25V	B	GRM188B11E104KA01D	K22144814		1-	A	C1
C 1620	CHIP CAP.	100pF	50V	CH	GRM1882C1H101JA01D	K22174235		1-	A	C1
C 1621	CHIP CAP.	0.1uF	25V	B	GRM188B11E104KA01D	K22144814		1-	A	C1
C 1622	CHIP CAP.	270pF	50V	CH	GRM1882C1H271JA01D	K22174251		1-	A	C1
C 1623	CHIP CAP.	0.1uF	25V	B	GRM188B11E104KA01D	K22144814		1-	A	C1
C 1624	CHIP CAP.	0.01uF	50V	B	GRM188B11H103KA01D	K22174823		1-	A	C1
C 1625	CHIP CAP.	270pF	50V	CH	GRM1882C1H271JA01D	K22174251		1-	A	C1
C 1626	CHIP CAP.	100pF	50V	CH	GRM1882C1H101JA01D	K22174235		1-	A	C1
C 1627	CHIP CAP.	220pF	50V	CH	GRM1882C1H221JA01D	K22174243		1-	A	C2
C 1628	CHIP CAP.	0.1uF	25V	B	GRM188B11E104KA01D	K22144814		1-	A	F3
C 1629	CHIP CAP.	0.22uF	16V	B	GRM188B11C224KA01D	K22124815		1-	A	F3
C 1630	CHIP CAP.	180pF	50V	CH	GRM1882C1H181JA01D	K22174241		1-	A	F2
C 1631	CHIP CAP.	0.1uF	25V	B	GRM188B11E104KA01D	K22144814		1-	A	D2
C 1632	CHIP CAP.	0.01uF	50V	B	GRM188B11H103KA01D	K22174823		1-	A	D2
C 1633	CHIP CAP.	0.1uF	25V	B	GRM188B11E104KA01D	K22144814		1-	A	F2
C 1634	CHIP CAP.	0.1uF	25V	B	GRM188B11E104KA01D	K22144814		1-	A	D2
C 1635	CHIP TA.CAP.	10uF	16V		TEESVA1C106M8R	K78120077		1-	A	D2
C 1636	CHIP CAP.	0.1uF	25V	B	GRM188B11E104KA01D	K22144814		1-	A	B6
C 1637	CHIP TA.CAP.	10uF	16V		TEESVA1C106M8R	K78120077		1-	A	B6
C 1638	CHIP CAP.	0.001uF	50V	B	GRM188B11H102KA01D	K22174821		1-	A	D2
C 1640	CHIP TA.CAP.	10uF	16V		TEESVA1C106M8R	K78120077		1-	A	D2
C 1641	CHIP CAP.	0.001uF	50V	B	GRM188B11H102KA01D	K22174821		1-	A	D2
C 1642	CHIP CAP.	0.1uF	25V	B	GRM188B11E104KA01D	K22144814		1-	A	D2
C 1643	CHIP TA.CAP.	10uF	16V		TEESVA1C106M8R	K78120077		1-	A	D2
C 1644	CHIP CAP.	0.1uF	25V	B	GRM188B11E104KA01D	K22144814		1-	A	E2
C 1645	CHIP CAP.	0.1uF	25V	B	GRM188B11E104KA01D	K22144814		1-	A	D2
C 1646	CHIP CAP.	0.1uF	25V	B	GRM188B11E104KA01D	K22144814		1-	A	D2
C 1647	CHIP CAP.	0.1uF	25V	B	GRM188B11E104KA01D	K22144814		1-	A	D2
C 1648	AL.ELECTRO.CAP.	220uF	10V		RV3-10V221MF80-R	K48100002		1-	A	F2
C 1649	CHIP CAP.	0.1uF	25V	B	GRM188B11E104KA01D	K22144814		1-	A	F2
C 1650	CHIP CAP.	0.001uF	50V	CH	GRM1882C1H102JA01D	K22174275		1-	A	H2
C 1651	CHIP CAP.	0.01uF	50V	B	GRM188B11H103KA01D	K22174823		1-	A	H2
C 1652	CHIP CAP.	0.1uF	25V	B	GRM188B11E104KA01D	K22144814		1-	A	H2
C 1653	AL.ELECTRO.CAP.	470uF	16V		16CE470BS	K48120035		1-	A	H3
C 1654	CHIP CAP.	1uF	25V	B	GRM21BB31E105KA98L	K22140826		1-	A	H2
C 1655	AL.ELECTRO.CAP.	470uF	16V		16CE470BS	K48120035		1-	A	H3
C 1656	CHIP CAP.	0.001uF	50V	CH	GRM1882C1H102JA01D	K22174275		1-	A	H2
C 1657	CHIP CAP.	0.01uF	50V	B	GRM188B11H103KA01D	K22174823		1-	A	H2
C 1658	AL.ELECTRO.CAP.	220uF	10V		RV3-10V221MF80-R	K48100002		1-	A	H2
C 1659	CHIP CAP.	1uF	25V	B	GRM21BB31E105KA98L	K22140826		1-	A	F1
C 1661	CHIP CAP.	1uF	25V	B	GRM21BB31E105KA98L	K22140826		1-	A	H2
C 1662	CHIP CAP.	1uF	25V	B	GRM21BB31E105KA98L	K22140826		1-	A	F2
C 1663	CHIP CAP.	1uF	25V	B	GRM21BB31E105KA98L	K22140826		1-	A	F1
C 1664	CHIP CAP.	0.01uF	50V	B	GRM188B11H103KA01D	K22174823		1-	A	E1
C 1665	CHIP CAP.	0.01uF	50V	B	GRM188B11H103KA01D	K22174823		1-	A	E1

REF	DESCRIPTION	VALUE	V/W	TOL.	MFR'S DESIG	YAESU P/N	VERS.	LOT	SIDE	LAY ADR
C 1666	CHIP CAP.	0.01uF	50V	B	GRM188B11H103KA01D	K22174823		1-	A	E1
C 1667	CHIP CAP.	0.01uF	50V	B	GRM188B11H103KA01D	K22174823		1-	A	C3
C 1668	CHIP CAP.	0.001uF	50V	CH	GRM1882C1H102JA01D	K22174275		1-	A	D3
C 1670	CHIP CAP.	0.01uF	50V	B	GRM188B11H103KA01D	K22174823		1-	A	D3
C 1671	CHIP CAP.	0.01uF	50V	B	GRM188B11H103KA01D	K22174823		1-	A	C3
C 1672	CHIP CAP.	0.01uF	50V	B	GRM188B11H103KA01D	K22174823		1-	A	C4
C 1673	CHIP CAP.	0.01uF	50V	B	GRM188B11H103KA01D	K22174823		1-	A	C4
C 1675	CHIP CAP.	0.01uF	50V	B	GRM188B11H103KA01D	K22174823		1-	A	C3
C 1676	CHIP CAP.	0.01uF	50V	B	GRM188B11H103KA01D	K22174823		1-	A	C3
C 1677	CHIP TA.CAP.	4.7uF	16V		TEESVA1C475M8R	K78120031		1-	A	B1
C 1678	CHIP TA.CAP.	10uF	16V		TEESVA1C106M8R	K78120077		1-	A	C1
C 1679	CHIP CAP.	0.01uF	50V	B	GRM188B11H103KA01D	K22174823		1-	A	C2
C 1680	CHIP CAP.	0.022uF	50V	B	GRM188B11H223KA01D	K22174839		1-	A	B2
C 1681	CHIP CAP.	0.01uF	50V	B	GRM188B11H103KA01D	K22174823		1-	A	C2
C 1682	CHIP CAP.	0.001uF	50V	CH	GRM1882C1H102JA01D	K22174275		1-	A	C2
C 1683	CHIP CAP.	0.001uF	50V	CH	GRM1882C1H102JA01D	K22174275		1-	A	C2
C 1684	CHIP CAP.	0.001uF	50V	CH	GRM1882C1H102JA01D	K22174275		1-	A	C2
C 1685	CHIP CAP.	0.1uF	25V	B	GRM188B11E104KA01D	K22144814		1-	A	C2
C 1686	CHIP CAP.	0.1uF	25V	B	GRM188B11E104KA01D	K22144814		1-	A	C2
C 1687	CHIP CAP.	0.001uF	50V	CH	GRM1882C1H102JA01D	K22174275		1-	A	C2
C 1688	CHIP CAP.	0.01uF	50V	B	GRM188B11H103KA01D	K22174823		1-	A	C2
C 1689	CHIP CAP.	3pF	50V	CJ	GRM1883C1H3R0CA01D	K22174204		1-	A	C2
C 1690	CHIP CAP.	0.01uF	50V	B	GRM188B11H103KA01D	K22174823		1-	A	C2
C 1691	CHIP CAP.	0.22uF	16V	B	GRM188B11C224KA01D	K22124815		1-	A	F2
C 1692	CHIP CAP.	0.22uF	16V	B	GRM188B11C224KA01D	K22124815		1-	A	F2
C 1693	CHIP CAP.	0.1uF	25V	B	GRM188B11E104KA01D	K22144814		1-	A	C1
C 1694	CHIP CAP.	0.001uF	50V	CH	GRM1882C1H102JA01D	K22174275		1-	A	C1
C 1695	CHIP CAP.	0.0015uF	50V	B	GRM188B11H152KA01D	K22174827		1-	A	E2
C 1696	CHIP CAP.	0.01uF	50V	B	GRM188B11H103KA01D	K22174823		1-	A	E2
C 1697	CHIP CAP.	0.1uF	25V	B	GRM188B11E104KA01D	K22144814		1-	A	E2
C 1698	CHIP TA.CAP.	10uF	16V		TEESVA1C106M8R	K78120077		1-	A	E2
C 1699	CHIP CAP.	0.1uF	25V	B	GRM188B11E104KA01D	K22144814		1-	A	E2
C 1700	CHIP CAP.	0.1uF	25V	B	GRM21BB11E104KA01L	K22140811		1-	A	F2
C 1701	CHIP CAP.	0.1uF	25V	B	GRM21BB11E104KA01L	K22140811		1-	A	F2
C 1702	CHIP CAP.	0.1uF	25V	B	GRM188B11E104KA01D	K22144814		1-	A	G2
C 1703	CHIP CAP.	0.1uF	25V	B	GRM21BB11E104KA01L	K22140811		1-	A	H2
C 1704	AL.ELECTRO.CAP.	470uF	16V		16CE470BS	K48120035		1-	A	H2
C 1705	CHIP CAP.	0.01uF	50V	B	GRM188B11H103KA01D	K22174823		1-	A	H1
C 1706	CHIP CAP.	0.01uF	50V	B	GRM188B11H103KA01D	K22174823		1-	A	H2
C 1707	AL.ELECTRO.CAP.	470uF	16V		16CE470BS	K48120035		1-	A	H3
C 1708	AL.ELECTRO.CAP.	100uF	16V		EEE1CA101WP	K48120012		1-	A	G2
C 1709	CHIP CAP.	0.01uF	50V	B	GRM188B11H103KA01D	K22174823		1-	A	H2
C 1710	CHIP CAP.	0.01uF	50V	B	GRM188B11H103KA01D	K22174823		1-	A	D1
C 1711	CHIP CAP.	0.01uF	50V	B	GRM188B11H103KA01D	K22174823		1-	A	D1
C 1712	CHIP CAP.	0.01uF	50V	B	GRM188B11H103KA01D	K22174823		1-	A	E1
C 1713	CHIP CAP.	0.001uF	50V	B	GRM188B11H102KA01D	K22174821		1-	A	C2
C 1714	CHIP CAP.	1uF	25V	B	GRM21BB31E105KA98L	K22140826		1-	A	C2
C 1715	CHIP CAP.	15pF	50V	CH	GRM1882C1H150JA01D	K22174215		1-	A	C2
C 1716	CHIP CAP.	0.001uF	50V	B	GRM188B11H102KA01D	K22174821		1-	A	C2
C 1717	CHIP CAP.	0.01uF	50V	B	GRM188B11H103JA01D	K22174824		1-	A	C2
C 1719	CHIP CAP.	68pF	50V	CH	GRM1882C1H680JA01D	K22174231		1-	A	C2
C 1722	CHIP CAP.	0.001uF	50V	B	GRM188B11H102KA01D	K22174821		1-	A	C2
C 1723	CHIP CAP.	0.01uF	50V	B	GRM188B11H103JA01D	K22174824		1-	A	C2
C 1724	CHIP CAP.	0.01uF	50V	B	GRM188B11H103KA01D	K22174823		1-	A	C2
C 1725	CHIP CAP.	0.01uF	50V	B	GRM188B11H103KA01D	K22174823		1-	A	C2
C 1726	CHIP CAP.	470pF	50V	CH	GRM1882C1H471JA01D	K22174249		1-	A	B2
C 1727	CHIP CAP.	0.001uF	50V	CH	GRM1882C1H102JA01D	K22174275		1-	A	C2
C 1728	CHIP CAP.	0.01uF	50V	B	GRM188B11H103KA01D	K22174823		1-	A	C2
C 1729	CHIP CAP.	0.001uF	50V	CH	GRM1882C1H102JA01D	K22174275		1-	A	C2
C 1730	CHIP CAP.	0.1uF	25V	B	GRM188B11E104KA01D	K22144814		1-	A	C2
C 1731	CHIP TA.CAP.	10uF	16V		TEESVA1C106M8R	K78120077		1-	A	E2
C 1732	CHIP CAP.	0.1uF	25V	B	GRM188B11E104KA01D	K22144814		1-	A	E2
C 1733	CHIP CAP.	0.01uF	50V	B	GRM188B11H103KA01D	K22174823		1-	A	E2
C 1734	CHIP TA.CAP.	10uF	16V		TEESVA1C106M8R	K78120077		1-	A	E2
C 1735	CHIP CAP.	0.01uF	50V	B	GRM188B11H103KA01D	K22174823		1-	A	E2
C 1736	CHIP CAP.	0.01uF	50V	B	GRM188B11H103KA01D	K22174823		1-	A	F2
C 1737	CHIP CAP.	0.0033uF	50V	CH	GRM1882C1H332JA01D	K22174281		1-	A	F2
C 1738	CHIP TA.CAP.	10uF	16V		TEESVA1C106M8R	K78120077		1-	A	F2
C 1739	CHIP CAP.	0.01uF	50V	B	GRM188B11H103KA01D	K22174823		1-	A	G1
C 1740	CHIP CAP.	0.0047uF	50V	B	GRM216B11H472KA01D	K22170813		1-	A	F2
C 1741	CHIP CAP.	0.1uF	25V	B	GRM21BB11E104KA01L	K22140811		1-	A	G1
C 1742	CHIP CAP.	0.01uF	50V	B	GRM188B11H103KA01D	K22174823		1-	A	G1
C 1743	CHIP CAP.	0.01uF	50V	B	GRM188B11H103KA01D	K22174823		1-	A	H1

REF	DESCRIPTION	VALUE	V/W	TOL.	MFR'S DESIG	YAESU P/N	VERS.	LOT	SIDE	LAY ADR
C 1744	CHIP CAP.	0.01uF	50V	B	GRM188B11H103KA01D	K22174823		1-	A	H2
C 1745	CHIP CAP.	0.1uF	25V	B	GRM21BB11E104KA01L	K22140811		1-	A	H2
C 1747	CHIP CAP.	0.01uF	50V	B	GRM188B11H103KA01D	K22174823		1-	A	G1
C 1748	CHIP CAP.	0.022uF	50V	B	GRM188B11H223KA01D	K22174839		1-	A	H2
C 1750	CHIP CAP.	0.022uF	50V	B	GRM188B11H223KA01D	K22174839		1-	A	H2
C 1751	CHIP CAP.	0.01uF	50V	B	GRM188B11H103KA01D	K22174823		1-	A	G1
C 1752	CHIP CAP.	0.022uF	50V	B	GRM188B11H223KA01D	K22174839		1-	A	H2
C 1754	CHIP CAP.	0.022uF	50V	B	GRM188B11H223KA01D	K22174839		1-	A	H2
C 1755	CHIP CAP.	0.01uF	50V	B	GRM188B11H103KA01D	K22174823		1-	A	G1
C 1756	CHIP CAP.	0.022uF	50V	B	GRM188B11H223KA01D	K22174839		1-	A	H2
C 1757	CHIP CAP.	0.001uF	50V	B	GRM188B11H102KA01D	K22174821		1-	A	C2
C 1758	CHIP CAP.	0.1uF	25V	B	GRM21BB11E104KA01L	K22140811		1-	A	G1
C 1759	CHIP CAP.	0.01uF	50V	B	GRM188B11H103KA01D	K22174823		1-	A	G1
C 1760	CHIP CAP.	0.01uF	50V	B	GRM188B11H103KA01D	K22174823		1-	A	D3
C 1761	CHIP CAP.	0.001uF	50V	CH	GRM1882C1H102JA01D	K22174275		1-	A	C2
C 1764	CHIP CAP.	10pF	50V	CH	GRM1882C1H100JA01D	K22174211		1-	A	D4
C 1769	CHIP CAP.	0.1uF	25V	B	GRM188B11E104KA01D	K22144814		1-	A	F5
C 1770	CHIP CAP.	33pF	50V	CH	GRM1882C1H330JA01D	K22174223		1-	A	F5
C 1771	CHIP CAP.	1uF	16V	B	C1608JB1C105KT	K22124813		1-		
CF1001	CERAMIC FILTER				CFWLB455KFFA-B0	H3900395		1-	A	D2
CF1002	CERAMIC FILTER				CFWLB455KFFA-B0	H3900395		1-	A	E2
D 1001	SURGE ABSORBER				1608SGX	Q9000891		1-	A	A1
D 1002	DIODE				BAS316	G2070716		1-	A	H5
D 1003	DIODE				BAS316	G2070716		1-	A	A1
D 1004	DIODE				DAN202U T106	G2070162		1-	A	D1
D 1005	DIODE				1SR154-400 TE25	G2070684		1-	A	D1
D 1006	DIODE				BAS316	G2070716		1-	A	A1
D 1007	DIODE				BAS316	G2070716		1-	A	G6
D 1008	DIODE				RN142S TE61	G2070994		1-	A	F5
D 1009	DIODE				BAS316	G2070716		1-	A	B1
D 1010	DIODE				RN142S TE61	G2070994		1-	A	A3
D 1011	DIODE				RN142S TE61	G2070994		1-	A	A3
D 1012	DIODE				RN142S TE61	G2070994		1-	A	A3
D 1013	DIODE				RN142S TE61	G2070994		1-	A	A4
D 1014	DIODE				RN142S TE61	G2070994		1-	A	F6
D 1015	DIODE				RN142S TE61	G2070994		1-	A	F6
D 1016	DIODE				RN142S TE61	G2070994		1-	A	F5
D 1018	DIODE				BAS316	G2070716		1-	A	A2
D 1019	DIODE				RN142S TE61	G2070994		1-	A	B3
D 1020	DIODE				RN142S TE61	G2070994		1-	A	B3
D 1021	DIODE				RN142S TE61	G2070994		1-	A	A4
D 1022	DIODE				RN142S TE61	G2070994		1-	A	B3
D 1023	DIODE				RN142S TE61	G2070994		1-	A	A5
D 1024	DIODE				RN142S TE61	G2070994		1-	A	B4
D 1025	DIODE				RN142S TE61	G2070994		1-	A	A5
D 1026	DIODE				RN142S TE61	G2070994		1-	A	E6
D 1027	DIODE				RN142S TE61	G2070994		1-	A	E6
D 1028	DIODE				RN142S TE61	G2070994		1-	A	E5
D 1029	DIODE				RN142S TE61	G2070994		1-	A	E5
D 1030	DIODE				BAS316	G2070716		1-	A	G5
D 1031	DIODE				HZM7.5NB3-TL-E	G2070786		1-	A	E3
D 1032	DIODE				BAS316	G2070716		1-	A	C5
D 1033	DIODE				RN142S TE61	G2070994		1-	A	B4
D 1034	DIODE				RN142S TE61	G2070994		1-	A	B5
D 1035	DIODE				RN142S TE61	G2070994		1-	A	B5
D 1036	DIODE				SMS3928-023LF	G2071442		1-	A	E4
D 1037	DIODE				HZM7.5NB3-TL-E	G2070786		1-	A	E3
D 1038	DIODE				RN142S TE61	G2070994		1-	A	B2
D 1041	DIODE				JDP2S04E(TAPE)	G2071180		1-	A	E4
D 1042	DIODE				HZM7.5NB3-TL-E	G2070786		1-	A	E3
D 1043	DIODE				BAS316	G2070716		1-	A	F4
D 1044	DIODE				BAS316	G2070716		1-	A	F4
D 1045	DIODE				BAS316	G2070716		1-	A	D5
D 1046	DIODE				BAS316	G2070716		1-	A	D1
D 1047	DIODE				DAN202U T106	G2070162		1-	A	E3
D 1048	DIODE				DAN202U T106	G2070162		1-	A	E3
D 1049	DIODE				BAS316	G2070716		1-	A	F4
D 1050	DIODE				HSM198S TR-E	G2070570		1-	A	D5
D 1051	DIODE				DAN202U T106	G2070162		1-	A	D2
D 1052	DIODE				BAS316	G2070716		1-	A	D1
D 1053	DIODE				DAP236U T106	G2070592		1-	A	E3
D 1054	DIODE				UDZS TE-17 6.8B	G2070888		1-	A	C5
D 1055	DIODE				SMS3928-023LF	G2071442		1-	A	E2

REF	DESCRIPTION	VALUE	V/W	TOL.	MFR'S DESIG	YAESU P/N	VERS.	LOT	SIDE	LAY ADR
D 1056	DIODE				1SS372(TE85R.F)	G2070632		1-	A	D1
D 1057	DIODE				DAP236U T106	G2070592		1-	A	D3
D 1058	DIODE				1SS226(TE85R.F)	G2070003		1-	A	D3
D 1059	DIODE				BAS316	G2070716		1-	A	C4
D 1060	DIODE				RN142S TE61	G2070994		1-	A	D3
D 1061	DIODE				RN142S TE61	G2070994		1-	A	D3
D 1062	DIODE				JDP2S04E(TAPE)	G2071180		1-	A	D6
D 1063	DIODE				JDP2S04E(TAPE)	G2071180		1-	A	D6
D 1064	DIODE				JDP2S04E(TAPE)	G2071180		1-	A	D6
D 1065	DIODE				DAN202U T106	G2070162		1-	A	F1
D 1066	DIODE				RN142S TE61	G2070994		1-	A	D3
D 1067	DIODE				RN142S TE61	G2070994		1-	A	C3
D 1068	DIODE				RN142S TE61	G2070994		1-	A	C3
D 1069	DIODE				DAN217U T106	G2071236		1-	A	G1
D 1070	DIODE				BAS316	G2070716		1-	A	E1
D 1071	DIODE				RN142S TE61	G2070994		1-	A	D3
D 1072	DIODE				RN142S TE61	G2070994		1-	A	C3
D 1073	DIODE				RN142S TE61	G2070994		1-	A	C2
D 1074	DIODE				BAS316	G2070716		1-	A	H2
D 1075	DIODE				BAS316	G2070716		1-	A	D1
D 1076	DIODE				BAS316	G2070716		1-	A	E1
D 1077	DIODE				JDP2S04E(TAPE)	G2071180		1-	A	C2
D 1078	DIODE				BAS316	G2070716		1-	A	C4
D 1079	DIODE				BAS316	G2070716		1-	A	C4
D 1080	DIODE				BAS316	G2070716		1-	A	H1
D 1081	DIODE				BAS316	G2070716		1-	A	H2
FB1001	FERRITE BEADS				BLM18BD182SN1D	L1690602		1-	A	H5
FB1002	FERRITE BEADS				BLM18BD182SN1D	L1690602		1-	A	H5
FB1003	FERRITE BEADS				BLM18BD182SN1D	L1690602		1-	A	H5
FB1004	FERRITE BEADS				BLM18BD182SN1D	L1690602		1-	A	H5
FB1005	FERRITE BEADS				BLM18BD182SN1D	L1690602		1-	A	H5
FB1006	FERRITE BEADS				BLM18BD182SN1D	L1690602		1-	A	H5
FB1007	FERRITE BEADS				BLM18BD182SN1D	L1690602		1-	A	H5
FB1008	FERRITE BEADS				BLM18BD182SN1D	L1690602		1-	A	H5
FB1009	FERRITE BEADS				BLM18BD182SN1D	L1690602		1-	A	H5
FB1010	FERRITE BEADS				BLM18BD182SN1D	L1690602		1-	A	H5
FB1011	FERRITE BEADS				BLM18BD182SN1D	L1690602		1-	A	H5
FB1012	FERRITE BEADS				BLM18BD182SN1D	L1690602		1-	A	H5
FB1013	FERRITE BEADS				BLM18BD182SN1D	L1690602		1-	A	H5
FB1014	FERRITE BEADS				BLM18BD182SN1D	L1690602		1-	A	H5
FB1015	FERRITE BEADS				BLM18BD182SN1D	L1690602		1-	A	H4
FB1016	FERRITE BEADS				BLM18BD182SN1D	L1690602		1-	A	H4
FB1017	FERRITE BEADS				BLM18BD182SN1D	L1690602		1-	A	F4
J 1001	CONNECTOR				TMP-J01X-V6	P1090210		1-	A	A1
J 1002	CONNECTOR				JPJ2545-01-510	P1090633		1-	A	B1
J 1003	CONNECTOR				JPJ2545-01-510	P1090633		1-	A	A1
J 1004	CONNECTOR				TMP-J01X-V6	P1090210		1-	A	H6
J 1005	CONNECTOR				JPJ2545-01-510	P1090633		1-	A	F1
J 1006	CONNECTOR				YKB21-5296N	P1091233		1-	A	F1
J 1007	CONNECTOR				30FLT-SM2-TB(LF)(SN)(M)	P1091142		1-	A	H5
J 1008	CONNECTOR				TCS7705-5120177	P1091244		1-	A	C1
J 1009	CONNECTOR				MDJ-008-RS01/1-AGZ	P1091464		1-	A	D1
J 1010	CONNECTOR				MDJ-006-RS01/1-AGZ	P1091463		1-	A	C1
J 1011	CONNECTOR				30FLT-SM2-TB(LF)(SN)(M)	P1091142		1-	A	H4
J 1012	CONNECTOR				SC25-03WS	P0090622		1-	A	E3
J 1013	CONNECTOR				SB20-02WS	P0090609		1-	A	F4
J 1016	CONNECTOR				SB20-04WS	P0090611		1-	A	F1
J 1017	CONNECTOR				MDJ-006-RS01/1-AGZ	P1091463		1-	A	E1
J 1018	CONNECTOR				JPJ2545-01-510	P1090633		1-	A	E1
J 1019	CONNECTOR				SB20-08WS	P0090615		1-	A	F2
J 1020	CONNECTOR				SC25-02WS	P0090621		1-	A	G1
J 1021	CONNECTOR				SB20-03WS	P0090610		1-	A	H1
J 1022	CONNECTOR				SB20-06WS	P0090613		1-	A	H2
J 1023	CONNECTOR				TMP-J01X-V6	P1090210		1-	A	D6
J 1024	CONNECTOR				TMP-J01X-V6	P1090210		1-	A	C2
J 1025	CONNECTOR				TMP-J01X-V6	P1090210		1-	A	F2
J 1027	CONNECTOR				YKB21-5296N	P1091233		1-	A	G1
J 1028	CONNECTOR				HTJ-064-05G	P1091458		1-	A	H1
J 1029	CONNECTOR				IMSA6065B-06-Z075-PT1	P0091455		1-		
J 1030	CONNECTOR				IMSA6065B-05-Z075-PT1	P0091416		1-		
L 1001	M.RFC	1000uH			LLM3225-102J	L1691157		1-	A	F1
L 1002	M.RFC	1000uH			LLM3225-102J	L1691157		1-	A	F1
L 1003	M.RFC	1000uH			LLM3225-102J	L1691157		1-	A	A1

REF	DESCRIPTION	VALUE	V/W	TOL.	MFR'S DESIG	YAESU P/N	VERS.	LOT	SIDE	LAY ADR
L 1004	M.RFC	100uH			LLM3225-101J	L1691145		1-	A	D1
L 1005	M.RFC	100uH			LLM3225-101J	L1691145		1-	A	C1
L 1007	CHIP COIL	0.1uH		2%	C2520C-R10G-RA	L1691294		1-	A	G6
L 1008	M.RFC	100uH			LLM3225-101J	L1691145		1-	A	C1
L 1009	CHIP COIL	0.15uH		2%	C2520C-R15G-RA	L1691296		1-	A	G6
L 1010	CHIP COIL	0.15uH		2%	C2520C-R15G-RA	L1691296		1-	A	G6
L 1011	M.RFC	10uH			LLM3225-100J	L1691133		1-	A	G6
L 1012	M.RFC	0.47uH		5%	C2012C-R47J	L1691016		2-	A	F5
L 1013	CHIP COIL	0.18uH		2%	C2520C-R18G-RA	L1691297		1-	A	B2
L 1014	CHIP COIL	0.22uH		2%	C2520C-R22G-RA	L1691298		1-	A	B2
L 1015	M.RFC	1000uH			LLM3225-102J	L1691157		1-	A	A2
L 1016	M.RFC	4.7uH		5%	EL0606RA-4R7J-PF	L1790272		1-	A	A3
L 1017	CHIP COIL	0.39uH		2%	C2520C-R39G-RA	L1691301		1-	A	A3
L 1018	CHIP COIL	1uH		2%	C2520C-1R0G-RA	L1691309		1-	A	A3
L 1019	CHIP COIL	0.39uH		2%	C2520C-R39G-RA	L1691301		1-	A	A3
L 1020	CHIP COIL	0.15uH		2%	C2520C-R15G-RA	L1691296		1-	A	B3
L 1021	CHIP COIL	0.12uH		2%	C2520C-R12G-RA	L1691295		1-	A	B3
L 1022	CHIP COIL	0.39uH		2%	C2520C-R39G-RA	L1691301		1-	A	B3
L 1023	CHIP COIL	0.15uH		2%	C2520C-R15G-RA	L1691296		1-	A	B3
L 1024	CHIP COIL	0.56uH		2%	C2520C-R56G-RA	L1691303		1-	A	A3
L 1025	CHIP COIL	0.82uH		2%	C2520C-R82G-RA	L1691307		1-	A	A3
L 1026	CHIP COIL	0.18uH		2%	C2520C-R18G-RA	L1691297		1-	A	B3
L 1027	CHIP COIL	0.82uH		2%	C2520C-R82G-RA	L1691307		1-	A	B3
L 1028	M.RFC	0.56uH		10%	EL0606RA-R56K-PF	L1790261		1-	A	A4
L 1029	M.RFC	1.8uH		5%	EL0606RA-1R8J-PF	L1790267		1-	A	A4
L 1030	M.RFC	0.22uH		10%	EL0606RA-R22K-PF	L1790256		1-	A	B4
L 1031	M.RFC	1.8uH		5%	EL0606RA-1R8J-PF	L1790267		1-	A	B4
L 1032	CHIP COIL	10uH		5%	NLV25T-100J-PF	L1691436		1-	A	F6
L 1033	CHIP COIL	1.2uH		5%	NLV25T-1R2J-PF	L1691425		1-	A	E6
L 1034	CHIP COIL	3.3uH		5%	NLV25T-3R3J-PF	L1691430		1-	A	E6
L 1035	CHIP COIL	1.2uH		5%	NLV25T-1R2J-PF	L1691425		1-	A	E6
L 1036	CHIP COIL	0.82uH		5%	NLV25T-R82J-PF	L1691423		1-	A	F6
L 1037	CHIP COIL	1uH		5%	NLV25T-1R0J-PF	L1691424		1-	A	E6
L 1038	CHIP COIL	1uH		5%	NLV25T-1R0J-PF	L1691424		1-	A	E5
L 1039	CHIP COIL	0.27uH		5%	NLV25T-R27J-PF	L1691417		1-	A	E6
L 1040	CHIP COIL	1uH		5%	NLV25T-1R0J-PF	L1691424		1-	A	E6
L 1041	CHIP COIL	1uH		5%	NLV25T-1R0J-PF	L1691424		1-	A	E5
L 1042	CHIP COIL	0.33uH		5%	NLV25T-R33J-PF	L1691418		1-	A	F5
L 1043	M.RFC	0.047uH		2%	C2012C-47NG-RA	L1690772		1-	A	F5
L 1044	CHIP COIL	0.68uH		5%	NLV25T-R68J-PF	L1691422		1-	A	E5
L 1045	CHIP COIL	0.1uH		5%	NLV25T-R10J-PF	L1691412		1-	A	E5
L 1046	M.RFC	0.022uH		2%	C2012C-22NG-RA	L1690768		1-	A	E5
L 1047	CHIP COIL	0.68uH		5%	NLV25T-R68J-PF	L1691422		1-	A	E5
L 1048	CHIP COIL	0.18uH		2%	C2520C-R18G-RA	L1691297		1-	A	B2
L 1049	M.RFC	3.9uH		5%	EL0606RA-3R9J-PF	L1790271		1-	A	A2
L 1050	M.RFC	3.9uH		5%	EL0606RA-3R9J-PF	L1790271		1-	A	A2
L 1051	M.RFC	4.7uH		5%	EL0606RA-4R7J-PF	L1790272		1-	A	A2
L 1052	CHIP COIL	1uH		2%	C2520C-1R0G-RA	L1691309		1-	A	B3
L 1053	CHIP COIL	0.39uH		2%	C2520C-R39G-RA	L1691301		1-	A	B3
L 1054	M.RFC	1.5uH		5%	EL0606RA-1R5J-PF	L1790266		1-	A	A4
L 1055	CHIP COIL	0.56uH		2%	C2520C-R56G-RA	L1691303		1-	A	B3
L 1056	M.RFC	1.8uH		5%	EL0606RA-1R8J-PF	L1790267		1-	A	A5
L 1057	M.RFC	0.56uH		10%	EL0606RA-R56K-PF	L1790261		1-	A	B4
L 1058	M.RFC	1000uH			LLM3225-102J	L1691157		1-	A	B2
L 1059	M.RFC	5.6uH		5%	EL0606RA-5R6J-PF	L1790273		1-	A	A5
L 1060	CHIP COIL	10uH		5%	NLV25T-100J-PF	L1691436		1-	A	E6
L 1061	CHIP COIL	0.82uH		5%	NLV25T-R82J-PF	L1691423		1-	A	E6
L 1062	CHIP COIL	0.33uH		5%	NLV25T-R33J-PF	L1691418		1-	A	E5
L 1063	M.RFC	0.047uH		2%	C2012C-47NG-RA	L1690772		1-	A	E5
L 1064	M.RFC	6.8uH		5%	EL0606RA-6R8J-PF	L1790274		1-	A	A2
L 1065	M.RFC	6.8uH		5%	EL0606RA-6R8J-PF	L1790274		1-	A	B2
L 1066	M.RFC	220uH		5%	EL0606RA-221J-PF	L1790292		1-	A	B2
L 1067	M.RFC	1000uH			LLM3225-102J	L1691157		1-	A	B2
L 1068	M.RFC	1.8uH		5%	EL0606RA-1R8J-PF	L1790267		1-	A	A4
L 1069	M.RFC	0.56uH		10%	EL0606RA-R56K-PF	L1790261		1-	A	B4
L 1070	M.RFC	1.8uH		5%	EL0606RA-1R8J-PF	L1790267		1-	A	B4
L 1071	M.RFC	5.6uH		5%	EL0606RA-5R6J-PF	L1790273		1-	A	A5
L 1072	M.RFC	0.56uH		10%	EL0606RA-R56K-PF	L1790261		1-	A	B5
L 1073	M.RFC	5.6uH		5%	EL0606RA-5R6J-PF	L1790273		1-	A	B5
L 1074	M.RFC	5.6uH		5%	EL0606RA-5R6J-PF	L1790273		1-	A	A5
L 1075	M.RFC	1.8uH		5%	EL0606RA-1R8J-PF	L1790267		1-	A	B5
L 1076	M.RFC	5.6uH		5%	EL0606RA-5R6J-PF	L1790273		1-	A	B5
L 1077	M.RFC	47uH			LLM3225-470J	L1691141		1-	A	C6

REF	DESCRIPTION	VALUE	V/W	TOL.	MFR'S DESIG	YAESU P/N	VERS.	LOT	SIDE	LAY ADR
L 1078	M.RFC	1.5uH		5%	EL0606RA-1R5J-PF	L1790266		1-	A	B4
L 1079	M.RFC	47uH			LLM3225-470J	L1691141		1-	A	C6
L 1080	M.RFC	1.8uH		5%	EL0606RA-1R8J-PF	L1790267		1-	A	B5
L 1081	M.RFC	5.6uH		5%	EL0606RA-5R6J-PF	L1790273		1-	A	B5
L 1084	CHIP COIL	0.27uH		2%	C2520C-R27G-RA	L1691299		1-	A	D5
L 1085	CHIP COIL	0.15uH		2%	C2520C-R15G-RA	L1691296		1-	A	D4
L 1087	M.RFC	1uH			LK1608 1R0K-T	L1690687		1-	A	E4
L 1088	CHIP COIL	0.18uH		2%	C2520C-R18G-RA	L1691297		1-	A	E4
L 1089	CHIP COIL	0.22uH		2%	C2520C-R22G-RA	L1691298		1-	A	E4
L 1090	CHIP COIL	0.15uH		2%	C2520C-R15G-RA	L1691296		1-	A	D4
L 1091	CHIP COIL	0.22uH		2%	C2520C-R22G-RA	L1691298		1-	A	C4
L 1092	CHIP COIL	0.22uH		2%	C2520C-R22G-RA	L1691298		1-	A	C4
L 1093	CHIP COIL	0.12uH		2%	C2520C-R12G-RA	L1691295		1-	A	D5
L 1094	CHIP COIL	0.12uH		2%	C2520C-R12G-RA	L1691295		1-	A	D5
L 1095	M.RFC	1000uH			LLM3225-102J	L1691157		1-	A	E1
L 1096	M.RFC	47uH			LLM3225-470J	L1691141		1-	A	D4
L 1099	M.RFC	1000uH			LLM3225-102J	L1691157		1-	A	C3
L 1100	CHIP COIL	4.7uH		2%	C2520C-4R7G-RA	L1691317		1-	A	D6
L 1101	M.RFC	470uH			LLM3225-471J	L1691153		1-	A	D1
L 1102	M.RFC	330uH			LLM3225-331J	L1691151		1-	A	C1
L 1103	CHIP COIL	2.2uH		10%	C2520C-2R2K-RA	L1690731		1-	A	D3
L 1104	M.RFC	15uH			LLM3225-150J	L1691135		1-	A	D3
L 1105	M.RFC	470uH			LLM3225-471J	L1691153		1-	A	C1
L 1106	M.RFC	470uH			LLM3225-471J	L1691153		1-	A	C1
L 1107	M.RFC	470uH			LLM3225-471J	L1691153		1-	A	D2
L 1108	M.RFC	470uH			LLM3225-471J	L1691153		1-	A	E1
L 1109	M.RFC	470uH			LLM3225-471J	L1691153		1-	A	E1
L 1110	M.RFC	470uH			LLM3225-471J	L1691153		1-	A	E1
L 1111	M.RFC	470uH			LLM3225-471J	L1691153		1-	A	D1
L 1112	M.RFC	15uH			LLM3225-150J	L1691135		1-	A	D3
L 1113	M.RFC	82uH			LLM3225-820J	L1691144		1-	A	E2
L 1114	M.RFC	470uH			LLM3225-471J	L1691153		1-	A	D1
L 1115	M.RFC	470uH			LLM3225-471J	L1691153		1-	A	E1
L 1116	M.RFC	22uH			LLM3225-220J	L1691137		1-	A	C2
L 1117	M.RFC	470uH			LLM3225-471J	L1691153		1-	A	G1
L 1118	M.RFC	470uH			LLM3225-471J	L1691153		1-	A	G1
L 1119	M.RFC	470uH			LLM3225-471J	L1691153		1-	A	G1
L 1121	M.RFC	0.47uH		5%	C2012C-R47J	L1691016		1-	A	F5
Q 1001	IC				LM2904PWR	G1094010		1-	A	F6
Q 1002	IC				LM2904PWR	G1094010		1-	A	B1
Q 1003	IC				LM2904PWR	G1094010		1-	A	G5
Q 1004	IC				NJM2068V-TE1	G1094112		1-	A	E3
Q 1005	IC				NJM2068V-TE1	G1094112		1-	A	E3
Q 1006	IC				LM2904PWR	G1094010		1-	A	F2
Q 1007	IC				LM2904PWR	G1094010		1-	A	F3
Q 1008	IC				NJM2068V-TE1	G1094112		1-	A	E3
Q 1009	IC				NJM2068V-TE1	G1094112		1-	A	E2
Q 1010	IC				NJM2068V-TE1	G1094112		1-	A	E3
Q 1011	IC				LM2902PWR	G1094009		1-	A	F4
Q 1012	IC				LM2904PWR	G1094010		1-	A	D5
Q 1013	IC				LM2902PWR	G1094009		1-	A	F1
Q 1014	IC				NJM2737V(TAPE)	G1094292		1-	A	H2
Q 1015	IC				NJM2737V(TAPE)	G1094292		1-	A	F2
Q 1016	IC				LM2904PWR	G1094010		1-	A	B2
Q 1017	TRANSISTOR				DTA114EUA T106	G3070083		1-	A	A1
Q 1018	POLY SWITCH				MINISMDC150F/16	G9090183		1-	A	E1
Q 1019	FET				BF1201WR_115	G3070425		1-	A	F6
Q 1020	IC				BU2152FS(TAPE)	G1093942		1-	A	G4
Q 1021	TRANSISTOR				DTC114YUA T106	G3070298		1-	A	C1
Q 1022	TRANSISTOR				DTC114YUA T106	G3070298		1-	A	C1
Q 1023	TRANSISTOR				2SD2403GY-T1	G3424038Y		1-	A	D1
Q 1024	TRANSISTOR				DTC114EUA T106	G3070084		1-	A	H5
Q 1025	TRANSISTOR				2SC5415E-TD-E	G3354158E		1-	A	G6
Q 1026	TRANSISTOR				DTA114EUA T106	G3070083		1-	A	B1
Q 1027	IC				SN74HCT04PWR	G1094484		1-	A	G4
Q 1028	TRANSISTOR				DTA114EUA T106	G3070083		1-	A	B1
Q 1029	IC				BU2505FV-E2	G1093714		1-	A	F5
Q 1030	TRANSISTOR				DTA114EUA T106	G3070083		1-	A	A2
Q 1033	TRANSISTOR				2SC4081 T106	G3340818		1-	A	F2
Q 1034	TRANSISTOR				2SC3356-T2B R24	G3333567D		1-	A	C6
Q 1036	TRANSISTOR				DTC143ZE TL	G3070102		1-	A	E6
Q 1037	TRANSISTOR				DTC143ZE TL	G3070102		1-	A	E6
Q 1038	TRANSISTOR				2SC3356-T2B R24	G3333567D		1-	A	C6

REF	DESCRIPTION	VALUE	V/W	TOL.	MFR'S DESIG	YAESU P/N	VERS.	LOT	SIDE	LAY ADR
Q 1039	TRANSISTOR				2SC4081 T106	G3340818		1-	A	E3
Q 1040	TRANSISTOR				DTC143ZE TL	G3070102		1-	A	E5
Q 1041	TRANSISTOR				2SC4081 T106	G3340818		1-	A	E1
Q 1042	TRANSISTOR				DTC143ZE TL	G3070102		1-	A	B1
Q 1043	FET				BF1201WR_115	G3070425		1-	A	E4
Q 1044	TRANSISTOR				2SC4081 T106	G3340818		1-	A	F3
Q 1045	TRANSISTOR				2SC4081 T106	G3340818		1-	A	E3
Q 1046	TRANSISTOR				2SC4081 T106	G3340818		1-	A	E1
Q 1047	TRANSISTOR				DTC143ZE TL	G3070102		1-	A	C5
Q 1048	TRANSISTOR				DTC143ZE TL	G3070102		1-	A	B1
Q 1049	IC				M51132FP 600C	G1091930		1-	A	G2
Q 1050	TRANSISTOR				DTC144EUA T106	G3070041		1-	A	E3
Q 1051	TRANSISTOR				DTC143ZE TL	G3070102		1-	A	B5
Q 1052	TRANSISTOR				DTC143ZE TL	G3070102		1-	A	B1
Q 1053	TRANSISTOR				2SA1576A T106 R	G3115768R		1-	A	D1
Q 1054	TRANSISTOR				DTC143ZE TL	G3070102		1-	A	B5
Q 1055	TRANSISTOR				2SA1576A T106 R	G3115768R		1-	A	D1
Q 1057	IC				CD74HCT4053PWR	G1094273		1-	A	F2
Q 1058	TRANSISTOR				UMD5N TR	G3070343		1-	A	C5
Q 1059	TRANSISTOR				DTC143ZE TL	G3070102		1-	A	B4
Q 1061	IC				HD74LV2G74A(TAPE)	G1093788		1-	A	G1
Q 1062	TRANSISTOR				2SC4081 T106	G3340818		1-	A	D1
Q 1063	TRANSISTOR				UMD5N TR	G3070343		1-	A	D5
Q 1064	TRANSISTOR				DTC143ZE TL	G3070102		1-	A	B4
Q 1065	IC				SN74LVC1G66DCKR	G1094046		1-	A	D1
Q 1066	TRANSISTOR				DTC144EUA T106	G3070041		1-	A	D3
Q 1067	TRANSISTOR				2SC2714Y(TE85R.F)	G3327147Y		1-	A	D3
Q 1068	TRANSISTOR				DTC143ZE TL	G3070102		1-	A	B4
Q 1069	TRANSISTOR				2SC4081 T106	G3340818		1-	A	D1
Q 1070	IC				M62364FP 600D	G1093033		1-	A	G2
Q 1071	TRANSISTOR				DTC143ZE TL	G3070102		1-	A	B4
Q 1072	TRANSISTOR				2SC4081 T106	G3340818		1-	A	D6
Q 1073	TRANSISTOR				DTC143ZE TL	G3070102		1-	A	B3
Q 1074	TRANSISTOR				2SC4081 T106	G3340818		1-	A	D1
Q 1075	TRANSISTOR				DTC143ZE TL	G3070102		1-	A	B4
Q 1077	TRANSISTOR				DTC143ZE TL	G3070102		1-	A	B3
Q 1078	TRANSISTOR				2SC4081 T106	G3340818		1-	A	C1
Q 1079	FET				MMBFJ310LT1G	G3070457		1-	A	D3
Q 1080	TRANSISTOR				DTC143ZE TL	G3070102		1-	A	B4
Q 1081	TRANSISTOR				2SC5415E-TD-E	G3354158E		1-	A	D5
Q 1082	FET				BF1201WR_115	G3070425		1-	A	C1
Q 1083	IC				NJM2594V-TE1	G1093750		1-	A	D2
Q 1084	IC				BU2152FS(TAPE)	G1093942		1-	A	B6
Q 1085	TRANSISTOR				2SC4081 T106	G3340818		1-	A	F2
Q 1087	IC				LA4425A-E	G1092241		1-	A	H2
Q 1088	FET				BF1201WR_115	G3070425		1-	A	C1
Q 1089	TRANSISTOR				2SC4081 T106	G3340818		1-	A	D2
Q 1091	TRANSISTOR				2SA1576A T106 R	G3115768R		1-	A	H1
Q 1092	TRANSISTOR				DTC144EUA T106	G3070041		1-	A	H2
Q 1092	TRANSISTOR				DTC124EU T106	G3070045		4-	A	H2
Q 1093	FET				3SK294(TE85L)	G4802948A		1-	A	C2
Q 1094	FET				3SK294(TE85L)	G4802948A		1-	A	C2
Q 1095	TRANSISTOR				2SC4081 T106	G3340818		1-	A	H1
Q 1097	IC				CD74HCT4053PWR	G1094273		1-	A	G2
Q 1098	IC				NJM2594V-TE1	G1093750		1-	A	E2
Q 1099	TRANSISTOR				2SC2714Y(TE85R.F)	G3327147Y		1-	A	C2
Q 1102	TRANSISTOR				2SC4081 T106	G3340818		1-	A	E2
Q 1103	TRANSISTOR				2SC4081 T106	G3340818		1-	A	B2
Q 1106	TRANSISTOR				2SD1628-TD-E	G3416288		1-	A	H2
Q 1107	TRANSISTOR				2SC3356-T2B R24	G3333567D		1-	A	D4
Q 1108	IC				CD74HCT4053PWR	G1094273		1-	A	F1
Q 1109	FET				3SK294(TE85L)	G4802948A		1-	A	D5
Q 1110	FET				3SK294(TE85L)	G4802948A		1-	A	C5
Q 1111	FET				3SK294(TE85L)	G4802948A		1-	A	C5
Q 1112	FET				3SK294(TE85L)	G4802948A		1-	A	C5
Q 1113	TRANSISTOR				2SD1664 T100 Q	G3416647Q		1-	A	C4
Q 1114	FET				BF1201WR_115	G3070425		1-	A	C2
Q 1115	FET				3SK294(TE85L)	G4802948A		1-	A	C2
Q 1116	FET				3SK294(TE85L)	G4802948A		1-	A	C1
Q 1117	TRANSISTOR				DTC143ZE TL	G3070102		1-	A	E5
Q 1118	TRANSISTOR				DTC114EUA T106	G3070084		1-	A	C4
Q 1119	FET				3SK294(TE85L)	G4802948A		1-	A	C1
R 1001	CHIP RES.	1k	1/4W	5%	RMC1/4 102JATP	J24245102		1-	A	A1

REF	DESCRIPTION	VALUE	V/W	TOL.	MFR'S DESIG	YAESU P/N	VERS.	LOT	SIDE	LAY ADR
R 1002	CHIP RES.	47	1/10W	5%	RMC1/10T 470J	J24205470		1-	A	A1
R 1003	CHIP RES.	0	1/10W	5%	RMC1/10T 000J	J24205000		1-	A	B1
R 1004	CHIP RES.	100	1/10W	5%	RMC1/10T 101J	J24205101		1-	A	A1
R 1005	CHIP RES.	100	1/16W	5%	RMC1/16 101JATP	J24185101		1-	A	A1
R 1006	CHIP RES.	0	1/10W	5%	RMC1/10T 000J	J24205000		1-	A	B1
R 1007	CHIP RES.	0	1/16W	5%	RMC1/16 000JATP	J24185000		1-	A	C1
R 1008	CHIP RES.	100	1/16W	5%	RMC1/16 101JATP	J24185101		1-	A	D1
R 1009	CHIP RES.	100	1/16W	5%	RMC1/16 101JATP	J24185101		1-	A	C1
R 1010	CHIP RES.	220	1/16W	5%	RMC1/16 221JATP	J24185221		1-	A	D1
R 1011	CHIP RES.	220	1/16W	5%	RMC1/16 221JATP	J24185221		1-	A	D1
R 1012	CHIP RES.	1k	1/16W	5%	RMC1/16 102JATP	J24185102		1-	A	C1
R 1013	CHIP RES.	220	1/16W	5%	RMC1/16 221JATP	J24185221		1-	A	D1
R 1014	CHIP RES.	220	1/16W	5%	RMC1/16 221JATP	J24185221		1-	A	D1
R 1015	CHIP RES.	220	1/16W	5%	RMC1/16 221JATP	J24185221		1-	A	D1
R 1016	CHIP RES.	0	1/16W	5%	RMC1/16 000JATP	J24185000		1-	A	F6
R 1017	CHIP RES.	47	1/16W	5%	RMC1/16 470JATP	J24185470		1-	A	F6
R 1018	CHIP RES.	100	1/16W	5%	RMC1/16 101JATP	J24185101		1-	A	B1
R 1019	CHIP RES.	100	1/16W	5%	RMC1/16 101JATP	J24185101		1-	A	B1
R 1020	CHIP RES.	0	1/16W	5%	RMC1/16 000JATP	J24185000		1-	A	F1
R 1021	CHIP RES.	0	1/16W	5%	RMC1/16 000JATP	J24185000		1-	A	F1
R 1022	CHIP RES.	100	1/16W	5%	RMC1/16 101JATP	J24185101		1-	A	C1
R 1023	CHIP RES.	100	1/16W	5%	RMC1/16 101JATP	J24185101		1-	A	C1
R 1024	CHIP RES.	10k	1/16W	5%	RMC1/16 103JATP	J24185103		1-	A	F1
R 1025	CHIP RES.	150	1/10W	5%	RMC1/10T 151J	J24205151		1-	A	A1
R 1026	CHIP RES.	68	1/10W	5%	RMC1/10T 680J	J24205680		1-	A	A1
R 1027	CHIP RES.	100	1/16W	5%	RMC1/16 101JATP	J24185101		1-	A	C1
R 1028	CHIP RES.	1k	1/16W	5%	RMC1/16 102JATP	J24185102		1-	A	C1
R 1029	CHIP RES.	1k	1/16W	5%	RMC1/16 102JATP	J24185102		1-	A	C1
R 1030	CHIP RES.	4.7k	1/16W	5%	RMC1/16 472JATP	J24185472		1-	A	F6
R 1031	CHIP RES.	10k	1/16W	5%	RMC1/16 103JATP	J24185103		1-	A	F6
R 1032	CHIP RES.	22k	1/16W	5%	RMC1/16 223JATP	J24185223		1-	A	F6
R 1033	CHIP RES.	100	1/16W	5%	RMC1/16 101JATP	J24185101		1-	A	F6
R 1034	CHIP RES.	1k	1/16W	5%	RMC1/16 102JATP	J24185102		1	A	F6
R 1034	CHIP RES.	2.2k	1/16W	5%	RMC1/16 222JATP	J24185222		2-	A	F6
R 1035	CHIP RES.	33	1/16W	5%	RMC1/16 330JATP	J24185330		1-	A	F5
R 1036	CHIP RES.	22	1/16W	5%	RMC1/16 220JATP	J24185220		1-	A	F6
R 1038	CHIP RES.	220	1/16W	5%	RMC1/16 221JATP	J24185221		1	A	F6
R 1038	CHIP RES.	470	1/16W	5%	RMC1/16 471JATP	J24185471		2-	A	F6
R 1039	CHIP RES.	220k	1/16W	5%	RMC1/16 224JATP	J24185224		1-	A	F5
R 1040	CHIP RES.	0	1/16W	5%	RMC1/16 000JATP	J24185000		1-	A	G6
R 1041	CHIP RES.	8.2	1/16W	5%	RMC1/16 8R2JATP	J24185829		1-	A	G6
R 1042	CHIP RES.	47	1/2W	5%	RMC1/2 470JCTP	J24275470		1-	A	G5
R 1043	CHIP RES.	100	1/16W	5%	RMC1/16 101JATP	J24185101		1-	A	B1
R 1044	CHIP RES.	470	1/16W	5%	RMC1/16 471JATP	J24185471		1-	A	H4
R 1045	CHIP RES.	470	1/16W	5%	RMC1/16 471JATP	J24185471		1-	A	H4
R 1046	CHIP RES.	470	1/16W	5%	RMC1/16 471JATP	J24185471		1-	A	H4
R 1047	CHIP RES.	100	1/16W	5%	RMC1/16 101JATP	J24185101		1-	A	A1
R 1048	CHIP RES.	33	1/4W	5%	RMC1/4 330JATP	J24245330		1-	A	B2
R 1049	CHIP RES.	1k	1/16W	5%	RMC1/16 102JATP	J24185102		1-	A	D1
R 1050	CHIP RES.	1k	1/16W	5%	RMC1/16 102JATP	J24185102		1-	A	C1
R 1051	CHIP RES.	4.7k	1/16W	5%	RMC1/16 472JATP	J24185472		1-	A	D1
R 1052	CHIP RES.	47k	1/16W	5%	RMC1/16 473JATP	J24185473		1-	A	E6
R 1053	CHIP RES.	47k	1/16W	5%	RMC1/16 473JATP	J24185473		1-	A	E5
R 1054	CHIP RES.	47k	1/16W	5%	RMC1/16 473JATP	J24185473		1-	A	E5
R 1055	CHIP RES.	47k	1/16W	5%	RMC1/16 473JATP	J24185473		1-	A	E5
R 1056	CHIP RES.	330	1/10W	5%	RMC1/10T 331J	J24205331		1-	A	F5
R 1057	CHIP RES.	680	1/16W	5%	RMC1/16 681JATP	J24185681		1-	A	G6
R 1058	CHIP RES.	220	1/4W	5%	RMC1/4 221JATP	J24245221		1-	A	G6
R 1059	CHIP RES.	330	1/16W	5%	RMC1/16 331JATP	J24185331		1-	A	G5
R 1060	CHIP RES.	100	1/16W	5%	RMC1/16 101JATP	J24185101		1-	A	G5
R 1061	CHIP RES.	1k	1/16W	5%	RMC1/16 102JATP	J24185102		1-	A	B1
R 1062	CHIP RES.	1k	1/16W	5%	RMC1/16 102JATP	J24185102		1-	A	B1
R 1063	CHIP RES.	100k	1/16W	5%	RMC1/16 104JATP	J24185104		1-	A	B1
R 1064	CHIP RES.	0	1/16W	5%	RMC1/16 000JATP	J24185000		1-	A	H4
R 1065	CHIP RES.	0	1/16W	5%	RMC1/16 000JATP	J24185000		1-	A	H4
R 1066	CHIP RES.	100	1/16W	5%	RMC1/16 101JATP	J24185101		1-	A	B1
R 1067	CHIP RES.	330	1/10W	5%	RMC1/10T 331J	J24205331		1-	A	A2
R 1068	CHIP RES.	0	1/16W	5%	RMC1/16 000JATP	J24185000		1-	A	A3
R 1069	CHIP RES.	220	1/10W	5%	RMC1/10T 221J	J24205221		1-	A	A3
R 1070	CHIP RES.	33	1/10W	5%	RMC1/10T 330J	J24205330		1-	A	B3
R 1071	CHIP RES.	220	1/10W	5%	RMC1/10T 221J	J24205221		1-	A	B3
R 1072	CHIP RES.	220	1/10W	5%	RMC1/10T 221J	J24205221		1-	A	A3
R 1073	CHIP RES.	220	1/10W	5%	RMC1/10T 221J	J24205221		1-	A	A4

REF	DESCRIPTION	VALUE	V/W	TOL.	MFR'S DESIG	YAESU P/N	VERS.	LOT	SIDE	LAY ADR
R 1074	CHIP RES.	33	1/10W	5%	RMC1/10T 330J	J24205330		1-	A	B3
R 1075	CHIP RES.	220	1/10W	5%	RMC1/10T 221J	J24205221		1-	A	B3
R 1076	CHIP RES.	220	1/10W	5%	RMC1/10T 221J	J24205221		1-	A	B4
R 1077	CHIP RES.	220	1/10W	5%	RMC1/10T 221J	J24205221		1-	A	A4
R 1078	CHIP RES.	33	1/10W	5%	RMC1/10T 330J	J24205330		1-	A	B4
R 1079	CHIP RES.	33	1/10W	5%	RMC1/10T 330J	J24205330		1-	A	A4
R 1080	CHIP RES.	220	1/10W	5%	RMC1/10T 221J	J24205221		1-	A	B4
R 1081	CHIP RES.	220	1/16W	5%	RMC1/16 221JATP	J24185221		1-	A	F6
R 1082	CHIP RES.	220	1/16W	5%	RMC1/16 221JATP	J24185221		1-	A	F6
R 1083	CHIP RES.	33	1/16W	5%	RMC1/16 330JATP	J24185330		1-	A	E6
R 1084	CHIP RES.	33	1/16W	5%	RMC1/16 330JATP	J24185330		1-	A	E5
R 1085	CHIP RES.	220	1/16W	5%	RMC1/16 221JATP	J24185221		1-	A	F5
R 1086	CHIP RES.	220	1/16W	5%	RMC1/16 221JATP	J24185221		1-	A	F5
R 1087	CHIP RES.	33	1/16W	5%	RMC1/16 330JATP	J24185330		1-	A	E5
R 1088	CHIP RES.	1k	1/16W	5%	RMC1/16 102JATP	J24185102		1-	A	B1
R 1089	CHIP RES.	470	1/16W	5%	RMC1/16 471JATP	J24185471		1-	A	B1
R 1090	CHIP RES.	33	1/16W	5%	RMC1/16 330JATP	J24185330		1-	A	E5
R 1091	CHIP RES.	470	1/16W	5%	RMC1/16 471JATP	J24185471		1-	A	G4
R 1092	CHIP RES.	470	1/16W	5%	RMC1/16 471JATP	J24185471		1-	A	G4
R 1093	CHIP RES.	470	1/16W	5%	RMC1/16 471JATP	J24185471		1-	A	G4
R 1094	CHIP RES.	0	1/16W	5%	RMC1/16 000JATP	J24185000		1-	A	H4
R 1095	CHIP RES.	330	1/10W	5%	RMC1/10T 331J	J24205331		1-	A	B2
R 1096	CHIP RES.	33	1/4W	5%	RMC1/4 330JATP	J24245330		1-	A	B2
R 1097	CHIP RES.	220	1/16W	5%	RMC1/16 221JATP	J24185221		1-	A	E6
R 1098	CHIP RES.	220	1/16W	5%	RMC1/16 221JATP	J24185221		1-	A	E6
R 1099	CHIP RES.	220	1/16W	5%	RMC1/16 221JATP	J24185221		1-	A	E5
R 1100	CHIP RES.	220	1/16W	5%	RMC1/16 221JATP	J24185221		1-	A	E5
R 1101	CHIP RES.	47	1/16W	5%	RMC1/16 470JATP	J24185470		1-	A	G5
R 1102	CHIP RES.	220k	1/16W	5%	RMC1/16 224JATP	J24185224		1-	A	G5
R 1103	CHIP RES.	330k	1/16W	5%	RMC1/16 334JATP	J24185334		1-	A	G5
R 1104	CHIP RES.	0	1/16W	5%	RMC1/16 000JATP	J24185000		1-	A	G5
R 1105	CHIP RES.	680k	1/16W	5%	RMC1/16 684JATP	J24185684		1-	A	G5
R 1106	CHIP RES.	10	1/16W	5%	RMC1/16 100JATP	J24185100		1-	A	F5
R 1107	CHIP RES.	4.7k	1/16W	5%	RMC1/16 472JATP	J24185472		1-	A	F5
R 1108	CHIP RES.	4.7k	1/16W	5%	RMC1/16 472JATP	J24185472		1-	A	F5
R 1109	CHIP RES.	470	1/16W	5%	RMC1/16 471JATP	J24185471		1-	A	F5
R 1110	CHIP RES.	470	1/16W	5%	RMC1/16 471JATP	J24185471		1-	A	F5
R 1111	CHIP RES.	470	1/16W	5%	RMC1/16 471JATP	J24185471		1-	A	F5
R 1112	CHIP RES.	470	1/16W	5%	RMC1/16 471JATP	J24185471		1-	A	H4
R 1113	CHIP RES.	470	1/16W	5%	RMC1/16 471JATP	J24185471		1-	A	H4
R 1114	CHIP RES.	27	1/16W	5%	RMC1/16 270JATP	J24185270		1-	A	A2
R 1115	CHIP RES.	33	1/16W	5%	RMC1/16 330JATP	J24185330		1-	A	A2
R 1116	CHIP RES.	27	1/16W	5%	RMC1/16 270JATP	J24185270		1-	A	A2
R 1117	CHIP RES.	330	1/10W	5%	RMC1/10T 331J	J24205331		1-	A	B2
R 1118	CHIP RES.	100	1/16W	5%	RMC1/16 101JATP	J24185101		1-	A	A2
R 1119	CHIP RES.	68	1/4W	5%	RMC1/4 680JATP	J24245680		1-	A	B2
R 1120	CHIP RES.	220	1/10W	5%	RMC1/10T 221J	J24205221		1-	A	A4
R 1121	CHIP RES.	220	1/10W	5%	RMC1/10T 221J	J24205221		1-	A	A5
R 1122	CHIP RES.	33	1/10W	5%	RMC1/10T 330J	J24205330		1-	A	A4
R 1123	CHIP RES.	33	1/10W	5%	RMC1/10T 330J	J24205330		1-	A	A5
R 1124	CHIP RES.	220	1/10W	5%	RMC1/10T 221J	J24205221		1-	A	B4
R 1125	CHIP RES.	220	1/10W	5%	RMC1/10T 221J	J24205221		1-	A	B5
R 1126	CHIP RES.	220	1/10W	5%	RMC1/10T 221J	J24205221		1-	A	A5
R 1127	CHIP RES.	33	1/10W	5%	RMC1/10T 330J	J24205330		1-	A	A5
R 1128	CHIP RES.	220	1/10W	5%	RMC1/10T 221J	J24205221		1-	A	B5
R 1129	CHIP RES.	22	1/16W	5%	RMC1/16 220JATP	J24185220		1-	A	D4
R 1130	CHIP RES.	47	1/16W	5%	RMC1/16 470JATP	J24185470		1-	A	D4
R 1131	CHIP RES.	330	1/10W	5%	RMC1/10T 331J	J24205331		1-	A	E5
R 1132	CHIP RES.	22k	1/16W	1%	RMC1/16 223FTP	J24183223		1-	A	E3
R 1133	CHIP RES.	22k	1/16W	1%	RMC1/16 223FTP	J24183223		1-	A	E3
R 1134	CHIP RES.	43k	1/16W	1%	RMC1/16 433FTP	J24183433		1-	A	E3
R 1135	CHIP RES.	47k	1/16W	1%	RMC1/16 473FTP	J24183473		1-	A	E3
R 1136	CHIP RES.	22k	1/16W	5%	RMC1/16 223JATP	J24185223		1-	A	G5
R 1137	CHIP RES.	22k	1/16W	1%	RMC1/16 223FTP	J24183223		1-	A	G5
R 1138	CHIP RES.	100k	1/16W	5%	RMC1/16 104JATP	J24185104		1-	A	G5
R 1139	CHIP RES.	12k	1/16W	1%	RMC1/16 123FTP	J24183123		1-	A	G5
R 1140	CHIP RES.	47	1/16W	5%	RMC1/16 470JATP	J24185470		1-	A	G5
R 1141	CHIP RES.	10k	1/16W	5%	RMC1/16 103JATP	J24185103		1-	A	F2
R 1142	CHIP RES.	47	1/16W	5%	RMC1/16 470JATP	J24185470		1-	A	F2
R 1143	CHIP RES.	2.2k	1/16W	5%	RMC1/16 222JATP	J24185222		1-	A	F2
R 1144	CHIP RES.	47	1/10W	5%	RMC1/10T 470J	J24205470		1-	A	C6
R 1145	CHIP RES.	33	1/10W	5%	RMC1/10T 330J	J24205330		1-	A	C6
R 1146	CHIP RES.	1k	1/16W	5%	RMC1/16 102JATP	J24185102		1-	A	C6

REF	DESCRIPTION	VALUE	V/W	TOL.	MFR'S DESIG	YAESU P/N	VERS.	LOT	SIDE	LAY ADR
R 1147	CHIP RES.	1k	1/16W	5%	RMC1/16 102JATP	J24185102		1-	A	C6
R 1148	CHIP RES.	47	1/10W	5%	RMC1/10T 470J	J24205470		1-	A	C6
R 1149	CHIP RES.	330	1/16W	5%	RMC1/16 331JATP	J24185331		1-	A	C6
R 1150	CHIP RES.	1k	1/16W	5%	RMC1/16 102JATP	J24185102		1-	A	C6
R 1151	CHIP RES.	33	1/10W	5%	RMC1/10T 330J	J24205330		1-	A	C6
R 1152	CHIP RES.	100	1/16W	5%	RMC1/16 101JATP	J24185101		1-	A	C5
R 1153	CHIP RES.	330	1/16W	5%	RMC1/16 331JATP	J24185331		1-	A	C6
R 1154	CHIP RES.	1k	1/16W	5%	RMC1/16 102JATP	J24185102		1-	A	C6
R 1156	CHIP RES.	22	1/16W	5%	RMC1/16 220JATP	J24185220		1-	A	D4
R 1157	CHIP RES.	1k	1/16W	5%	RMC1/16 102JATP	J24185102		1-	A	E4
R 1158	CHIP RES.	4.7k	1/16W	1%	RMC1/16 472FTP	J24183472		1-	A	E3
R 1159	CHIP RES.	68k	1/16W	5%	RMC1/16 683JATP	J24185683		1-	A	E3
R 1160	CHIP RES.	150k	1/16W	5%	RMC1/16 154JATP	J24185154		1-	A	E3
R 1161	CHIP RES.	150k	1/16W	5%	RMC1/16 154JATP	J24185154		1-	A	E3
R 1162	CHIP RES.	4.7k	1/16W	1%	RMC1/16 472FTP	J24183472		1-	A	E3
R 1163	CHIP RES.	4.7k	1/16W	1%	RMC1/16 472FTP	J24183472		1-	A	E3
R 1164	CHIP RES.	4.7k	1/16W	1%	RMC1/16 472FTP	J24183472		1-	A	E3
R 1165	CHIP RES.	100k	1/16W	5%	RMC1/16 104JATP	J24185104		1-	A	E3
R 1166	CHIP RES.	470k	1/16W	1%	RMC1/16 474FTP	J24183474		1-	A	G5
R 1167	CHIP RES.	3.3M	1/16W	5%	RMC1/16 335JATP	J24185335		1-	A	F2
R 1168	CHIP RES.	10k	1/16W	1%	RMC1/16 103FTP	J24183103		1-	A	F2
R 1169	CHIP RES.	10k	1/16W	1%	RMC1/16 103FTP	J24183103		1-	A	F2
R 1170	CHIP RES.	470k	1/16W	5%	RMC1/16 474JATP	J24185474		1-	A	F2
R 1171	CHIP RES.	47k	1/16W	1%	RMC1/16 473FTP	J24183473		1-	A	G5
R 1172	CHIP RES.	100k	1/16W	5%	RMC1/16 104JATP	J24185104		1-	A	G3
R 1173	CHIP RES.	68k	1/16W	5%	RMC1/16 683JATP	J24185683		1-	A	F3
R 1174	CHIP RES.	100k	1/16W	5%	RMC1/16 104JATP	J24185104		1-	A	F3
R 1175	CHIP RES.	100k	1/16W	5%	RMC1/16 104JATP	J24185104		1-	A	G2
R 1176	CHIP RES.	33k	1/16W	5%	RMC1/16 333JATP	J24185333		1-	A	F3
R 1177	CHIP RES.	220k	1/16W	5%	RMC1/16 224JATP	J24185224		1-	A	F3
R 1178	CHIP RES.	100k	1/16W	5%	RMC1/16 104JATP	J24185104		1-	A	G3
R 1179	CHIP RES.	10k	1/16W	5%	RMC1/16 103JATP	J24185103		1-	A	F3
R 1180	CHIP RES.	10k	1/16W	5%	RMC1/16 103JATP	J24185103		1-	A	F3
R 1181	CHIP RES.	10	1/10W	5%	RMC1/10T 100J	J24205100		1-	A	C6
R 1183	CHIP RES.	18	1/16W	5%	RMC1/16 180JATP	J24185180		1-	A	C5
R 1184	CHIP RES.	220	1/16W	1%	RMC1/16 221FTP	J24183221		1-	A	C5
R 1185	CHIP RES.	0	1/10W	5%	RMC1/10T 000J	J24205000		1-	A	C5
R 1186	CHIP RES.	10	1/10W	5%	RMC1/10T 100J	J24205100		1-	A	C6
R 1188	CHIP RES.	0	1/16W	5%	RMC1/16 000JATP	J24185000		1-	A	D6
R 1189	CHIP RES.	10	1/10W	5%	RMC1/10T 100J	J24205100		1-	A	C6
R 1190	CHIP RES.	1k	1/16W	5%	RMC1/16 102JATP	J24185102		1-	A	D6
R 1193	CHIP RES.	10	1/10W	5%	RMC1/10T 100J	J24205100		1-	A	D6
R 1194	CHIP RES.	100	1/16W	5%	RMC1/16 101JATP	J24185101		1-	A	D5
R 1195	CHIP RES.	1k	1/16W	5%	RMC1/16 102JATP	J24185102		1-	A	D2
R 1197	CHIP RES.	47	1/16W	5%	RMC1/16 470JATP	J24185470		1-	A	E2
R 1198	CHIP RES.	8.2k	1/16W	5%	RMC1/16 822JATP	J24185822		1-	A	B2
R 1199	CHIP RES.	3.9k	1/16W	5%	RMC1/16 392JATP	J24185392		1-	A	B2
R 1200	CHIP RES.	10k	1/16W	5%	RMC1/16 103JATP	J24185103		1-	A	E1
R 1201	CHIP RES.	68k	1/16W	5%	RMC1/16 683JATP	J24185683		1-	A	E2
R 1202	CHIP RES.	0	1/16W	5%	RMC1/16 000JATP	J24185000		1-	A	F2
R 1203	CHIP RES.	0	1/16W	5%	RMC1/16 000JATP	J24185000		1-	A	E2
R 1204	CHIP RES.	150	1/16W	5%	RMC1/16 151JATP	J24185151		1-	A	E4
R 1205	CHIP RES.	3.9k	1/16W	5%	RMC1/16 392JATP	J24185392		1-	A	E3
R 1206	CHIP RES.	22k	1/16W	5%	RMC1/16 223JATP	J24185223		1-	A	E4
R 1207	CHIP RES.	2.2k	1/16W	5%	RMC1/16 222JATP	J24185222		1-	A	E4
R 1208	CHIP RES.	10k	1/16W	5%	RMC1/16 103JATP	J24185103		1-	A	D3
R 1209	CHIP RES.	47k	1/16W	5%	RMC1/16 473JATP	J24185473		1-	A	E3
R 1210	CHIP RES.	10k	1/16W	5%	RMC1/16 103JATP	J24185103		1-	A	E3
R 1211	CHIP RES.	4.7k	1/16W	5%	RMC1/16 472JATP	J24185472		1-	A	E3
R 1212	CHIP RES.	470k	1/16W	5%	RMC1/16 474JATP	J24185474		1-	A	E3
R 1213	CHIP RES.	47k	1/16W	5%	RMC1/16 473JATP	J24185473		1-	A	D3
R 1214	CHIP RES.	10k	1/16W	5%	RMC1/16 103JATP	J24185103		1-	A	D3
R 1215	CHIP RES.	39k	1/16W	5%	RMC1/16 393JATP	J24185393		1-	A	D3
R 1216	CHIP RES.	100k	1/16W	5%	RMC1/16 104JATP	J24185104		1-	A	E3
R 1217	CHIP RES.	100k	1/16W	5%	RMC1/16 104JATP	J24185104		1-	A	D3
R 1218	CHIP RES.	1M	1/16W	1%	RMC1/16 105FTP	J24183105		1-	A	G5
R 1219	CHIP RES.	4.7k	1/16W	5%	RMC1/16 472JATP	J24185472		1-	A	G4
R 1220	CHIP RES.	2.2k	1/16W	5%	RMC1/16 222JATP	J24185222		1-	A	G5
R 1221	CHIP RES.	2.2k	1/16W	5%	RMC1/16 222JATP	J24185222		1-	A	F4
R 1222	CHIP RES.	470k	1/16W	5%	RMC1/16 474JATP	J24185474		1-	A	F4
R 1223	CHIP RES.	100k	1/16W	1%	RMC1/16 104FTP	J24183104		1-	A	G5
R 1224	CHIP RES.	4.7k	1/16W	5%	RMC1/16 472JATP	J24185472		1-	A	F2
R 1225	CHIP RES.	10k	1/16W	1%	RMC1/16 103FTP	J24183103		1-	A	F2

REF	DESCRIPTION	VALUE	V/W	TOL.	MFR'S DESIG	YAESU P/N	VERS.	LOT	SIDE	LAY ADR
R 1226	CHIP RES.	2.2k	1/16W	5%	RMC1/16 222JATP	J24185222		1-	A	G5
R 1227	CHIP RES.	10k	1/16W	5%	RMC1/16 103JATP	J24185103		1-	A	F2
R 1228	CHIP RES.	150k	1/16W	5%	RMC1/16 154JATP	J24185154		1-	A	F2
R 1229	CHIP RES.	47	1/16W	5%	RMC1/16 470JATP	J24185470		1-	A	F3
R 1230	CHIP RES.	100k	1/16W	5%	RMC1/16 104JATP	J24185104		1-	A	F3
R 1231	CHIP RES.	3.3k	1/16W	5%	RMC1/16 332JATP	J24185332		1-	A	F3
R 1232	CHIP RES.	4.7k	1/16W	5%	RMC1/16 472JATP	J24185472		1-	A	C5
R 1233	CHIP RES.	33	1/16W	1%	RMC1/16 330FTP	J24183330		1-	A	C5
R 1234	CHIP RES.	33	1/16W	1%	RMC1/16 330FTP	J24183330		1-	A	C5
R 1235	CHIP RES.	270	1/16W	5%	RMC1/16 271JATP	J24185271		1	A	D4
R 1236	CHIP RES.	18	1/16W	5%	RMC1/16 180JATP	J24185180		1	A	D4
R 1236	CHIP RES.	0	1/16W	5%	RMC1/16 000JATP	J24185000		2-	A	D4
R 1237	CHIP RES.	270	1/16W	5%	RMC1/16 271JATP	J24185271		1	A	D4
R 1239	CHIP RES.	100	1/16W	5%	RMC1/16 101JATP	J24185101		1-	A	D5
R 1240	CHIP RES.	10k	1/16W	5%	RMC1/16 103JATP	J24185103		1-	A	E2
R 1241	CHIP RES.	15k	1/16W	5%	RMC1/16 153JATP	J24185153		1-	A	D1
R 1242	CHIP RES.	22k	1/16W	5%	RMC1/16 223JATP	J24185223		1-	A	D1
R 1243	CHIP RES.	100k	1/16W	5%	RMC1/16 104JATP	J24185104		1-	A	D1
R 1244	CHIP RES.	2.2k	1/16W	5%	RMC1/16 222JATP	J24185222		1-	A	E2
R 1245	CHIP RES.	47	1/16W	5%	RMC1/16 470JATP	J24185470		1-	A	E2
R 1247	CHIP RES.	39k	1/16W	5%	RMC1/16 393JATP	J24185393		1-	A	E2
R 1248	CHIP RES.	47	1/16W	5%	RMC1/16 470JATP	J24185470		1-	A	E4
R 1249	CHIP RES.	47	1/16W	5%	RMC1/16 470JATP	J24185470		1-	A	E4
R 1250	CHIP RES.	100	1/16W	5%	RMC1/16 101JATP	J24185101		1-	A	E4
R 1251	CHIP RES.	100k	1/16W	5%	RMC1/16 104JATP	J24185104		1	A	E3
R 1251	CHIP RES.	68k	1/16W	5%	RMC1/16 683JATP	J24185683		2-	A	E3
R 1253	CHIP RES.	1.5k	1/16W	5%	RMC1/16 152JATP	J24185152		1-	A	E3
R 1254	CHIP RES.	150k	1/16W	5%	RMC1/16 154JATP	J24185154		1-	A	E3
R 1255	CHIP RES.	47k	1/16W	5%	RMC1/16 473JATP	J24185473		1-	A	E3
R 1256	CHIP RES.	10k	1/16W	5%	RMC1/16 103JATP	J24185103		1-	A	E3
R 1257	CHIP RES.	470	1/16W	5%	RMC1/16 471JATP	J24185471		1-	A	E3
R 1258	CHIP RES.	100k	1/16W	5%	RMC1/16 104JATP	J24185104		1-	A	E3
R 1259	CHIP RES.	10k	1/16W	5%	RMC1/16 103JATP	J24185103		1-	A	E3
R 1260	CHIP RES.	470k	1/16W	5%	RMC1/16 474JATP	J24185474		1-	A	E3
R 1261	CHIP RES.	2.2k	1/16W	5%	RMC1/16 222JATP	J24185222		1-	A	E3
R 1262	CHIP RES.	2.2k	1/16W	5%	RMC1/16 222JATP	J24185222		1-	A	F4
R 1263	CHIP RES.	2.2k	1/16W	5%	RMC1/16 222JATP	J24185222		1-	A	F4
R 1264	CHIP RES.	470k	1/16W	5%	RMC1/16 474JATP	J24185474		1-	A	F4
R 1265	CHIP RES.	2.2k	1/16W	5%	RMC1/16 222JATP	J24185222		1-	A	F4
R 1266	CHIP RES.	330k	1/16W	5%	RMC1/16 334JATP	J24185334		1-	A	F4
R 1267	CHIP RES.	10k	1/16W	5%	RMC1/16 103JATP	J24185103		1-	A	F4
R 1268	CHIP RES.	33k	1/16W	5%	RMC1/16 333JATP	J24185333		1-	A	F4
R 1269	CHIP RES.	10k	1/16W	5%	RMC1/16 103JATP	J24185103		1-	A	F4
R 1270	CHIP RES.	6.8k	1/16W	5%	RMC1/16 682JATP	J24185682		1-	A	F2
R 1271	CHIP RES.	33k	1/16W	5%	RMC1/16 333JATP	J24185333		1-	A	F2
R 1272	CHIP RES.	47	1/16W	5%	RMC1/16 470JATP	J24185470		1-	A	G3
R 1273	CHIP RES.	10k	1/16W	5%	RMC1/16 103JATP	J24185103		1-	A	F3
R 1274	CHIP RES.	33k	1/16W	5%	RMC1/16 333JATP	J24185333		1-	A	F3
R 1275	CHIP RES.	680	1/16W	5%	RMC1/16 681JATP	J24185681		1-	A	F3
R 1276	CHIP RES.	100k	1/16W	5%	RMC1/16 104JATP	J24185104		1-	A	F3
R 1277	CHIP RES.	22k	1/16W	5%	RMC1/16 223JATP	J24185223		1-	A	F3
R 1278	CHIP RES.	22k	1/16W	5%	RMC1/16 223JATP	J24185223		1-	A	F3
R 1279	CHIP RES.	2.2k	1/16W	5%	RMC1/16 222JATP	J24185222		1-	A	F3
R 1280	CHIP RES.	100	1/16W	1%	RMC1/16 101FTP	J24183101		1-	A	C5
R 1281	CHIP RES.	100	1/16W	1%	RMC1/16 101FTP	J24183101		1-	A	C5
R 1282	CHIP RES.	10	1/4W	5%	RMC1/4 100JATP	J24245100		1-	A	C4
R 1283	CHIP RES.	51	1/16W	1%	RMC1/16 510FTP	J24183510		1-	A	C4
R 1284	CHIP RES.	100k	1/16W	1%	RMC1/16 104FTP	J24183104		1-	A	D5
R 1285	CHIP RES.	33k	1/16W	1%	RMC1/16 333FTP	J24183333		1-	A	D5
R 1286	CHIP RES.	33k	1/16W	1%	RMC1/16 333FTP	J24183333		1-	A	D5
R 1287	CHIP RES.	100k	1/16W	1%	RMC1/16 104FTP	J24183104		1-	A	C5
R 1288	CHIP RES.	100	1/16W	5%	RMC1/16 101JATP	J24185101		1-	A	D4
R 1289	CHIP RES.	22k	1/16W	5%	RMC1/16 223JATP	J24185223		1-	A	D1
R 1290	CHIP RES.	4.7k	1/16W	5%	RMC1/16 472JATP	J24185472		1-	A	D5
R 1292	CHIP RES.	22k	1/16W	5%	RMC1/16 223JATP	J24185223		1-	A	D1
R 1293	CHIP RES.	1k	1/16W	5%	RMC1/16 102JATP	J24185102		1-	A	D5
R 1296	CHIP RES.	10k	1/16W	5%	RMC1/16 103JATP	J24185103		1-	A	D1
R 1297	CHIP RES.	47k	1/16W	5%	RMC1/16 473JATP	J24185473		1-	A	D1
R 1298	CHIP RES.	3.3k	1/16W	5%	RMC1/16 332JATP	J24185332		1-	A	D1
R 1299	CHIP RES.	47k	1/16W	5%	RMC1/16 473JATP	J24185473		1-	A	B5
R 1300	CHIP RES.	5.6k	1/16W	5%	RMC1/16 562JATP	J24185562		1-	A	E2
R 1302	CHIP RES.	47k	1/16W	5%	RMC1/16 473JATP	J24185473		1-	A	B5
R 1303	CHIP RES.	0	1/16W	5%	RMC1/16 000JATP	J24185000		1-	A	E2

REF	DESCRIPTION	VALUE	V/W	TOL.	MFR'S DESIG	YAESU P/N	VERS.	LOT	SIDE	LAY ADR
R 1305	CHIP RES.	560	1/16W	5%	RMC1/16 561JATP	J24185561		1-	A	E3
R 1306	CHIP RES.	180	1/16W	5%	RMC1/16 181JATP	J24185181		1-	A	E3
R 1307	CHIP RES.	10k	1/16W	5%	RMC1/16 103JATP	J24185103		1-	A	E3
R 1308	CHIP RES.	1.5k	1/16W	5%	RMC1/16 152JATP	J24185152		1-	A	E3
R 1309	CHIP RES.	120	1/10W	5%	RMC1/10T 121J	J24205121		1-	A	D3
R 1310	CHIP RES.	47	1/10W	5%	RMC1/10T 470J	J24205470		1-	A	D3
R 1312	CHIP RES.	1k	1/16W	5%	RMC1/16 102JATP	J24185102		1-	A	D3
R 1313	CHIP RES.	47k	1/16W	1%	RMC1/16 473FTP	J24183473		1-	A	E3
R 1314	CHIP RES.	3.3k	1/16W	5%	RMC1/16 332JATP	J24185332		1	A	E3
R 1314	CHIP RES.	3.9k	1/16W	5%	RMC1/16 392JATP	J24185392		2-	A	E3
R 1315	CHIP RES.	47k	1/16W	1%	RMC1/16 473FTP	J24183473		1-	A	E3
R 1316	CHIP RES.	100k	1/16W	1%	RMC1/16 104FTP	J24183104		1-	A	E3
R 1317	CHIP RES.	100k	1/16W	1%	RMC1/16 104FTP	J24183104		1-	A	E3
R 1318	CHIP RES.	4.7k	1/16W	5%	RMC1/16 472JATP	J24185472		1-	A	E3
R 1319	CHIP RES.	10k	1/16W	5%	RMC1/16 103JATP	J24185103		1-	A	F1
R 1320	CHIP RES.	68k	1/16W	5%	RMC1/16 683JATP	J24185683		1-	A	F4
R 1321	CHIP RES.	10k	1/16W	5%	RMC1/16 103JATP	J24185103		1-	A	F4
R 1322	CHIP RES.	100k	1/16W	5%	RMC1/16 104JATP	J24185104		1-	A	F4
R 1323	CHIP RES.	10k	1/16W	5%	RMC1/16 103JATP	J24185103		1-	A	G4
R 1324	CHIP RES.	10k	1/16W	5%	RMC1/16 103JATP	J24185103		1-	A	F4
R 1325	CHIP RES.	4.7k	1/16W	5%	RMC1/16 472JATP	J24185472		1-	A	E3
R 1326	CHIP RES.	10k	1/16W	5%	RMC1/16 103JATP	J24185103		1-	A	G2
R 1327	CHIP RES.	10k	1/16W	5%	RMC1/16 103JATP	J24185103		1-	A	G2
R 1328	CHIP RES.	47	1/16W	5%	RMC1/16 470JATP	J24185470		1-	A	F2
R 1329	CHIP RES.	47	1/16W	5%	RMC1/16 470JATP	J24185470		1-	A	F4
R 1330	CHIP RES.	4.7	1/16W	5%	RMC1/16 4R7JATP	J24185479		1-	A	F2
R 1331	CHIP RES.	220	1/16W	5%	RMC1/16 221JATP	J24185221		1-	A	F4
R 1332	CHIP RES.	33k	1/16W	5%	RMC1/16 333JATP	J24185333		1-	A	G2
R 1333	CHIP RES.	0	1/16W	5%	RMC1/16 000JATP	J24185000		1-	A	F2
R 1334	CHIP RES.	6.8k	1/16W	5%	RMC1/16 682JATP	J24185682		1-	A	G2
R 1335	CHIP RES.	51	1/16W	1%	RMC1/16 510FTP	J24183510		1-	A	C4
R 1337	CHIP RES.	100	1/10W	5%	RMC1/10T 101J	J24205101		1-	A	C4
R 1338	CHIP RES.	1k	1/16W	5%	RMC1/16 102JATP	J24185102		1-	A	C5
R 1339	CHIP RES.	0	1/16W	5%	RMC1/16 000JATP	J24185000		1-	A	D4
R 1340	CHIP RES.	47	1/10W	5%	RMC1/10T 470J	J24205470		1-	A	D4
R 1341	CHIP RES.	330	1/16W	5%	RMC1/16 331JATP	J24185331		1-	A	E4
R 1342	CHIP RES.	1k	1/16W	5%	RMC1/16 102JATP	J24185102		1-	A	E4
R 1343	CHIP RES.	10k	1/16W	5%	RMC1/16 103JATP	J24185103		1-	A	D5
R 1344	CHIP RES.	100k	1/16W	5%	RMC1/16 104JATP	J24185104		1-	A	D1
R 1345	CHIP RES.	10	1/16W	5%	RMC1/16 100JATP	J24185100		1-	A	D6
R 1347	CHIP RES.	56	1/4W	5%	RMC1/4 560JATP	J24245560		1-	A	D5
R 1348	CHIP RES.	100	1/16W	5%	RMC1/16 101JATP	J24185101		1-	A	D1
R 1349	CHIP RES.	0	1/16W	5%	RMC1/16 000JATP	J24185000		1-	A	E1
R 1350	CHIP RES.	150k	1/16W	5%	RMC1/16 154JATP	J24185154		1-	A	D1
R 1351	CHIP RES.	68k	1/16W	5%	RMC1/16 683JATP	J24185683		1-	A	D1
R 1352	CHIP RES.	15k	1/16W	5%	RMC1/16 153JATP	J24185153		1-	A	D1
R 1353	CHIP RES.	100k	1/16W	5%	RMC1/16 104JATP	J24185104		1-	A	D1
R 1354	CHIP RES.	1k	1/16W	5%	RMC1/16 102JATP	J24185102		1-	A	D1
R 1355	CHIP RES.	47k	1/16W	5%	RMC1/16 473JATP	J24185473		1-	A	B4
R 1356	CHIP RES.	47k	1/16W	5%	RMC1/16 473JATP	J24185473		1-	A	B4
R 1357	CHIP RES.	47k	1/16W	5%	RMC1/16 473JATP	J24185473		1-	A	B4
R 1358	CHIP RES.	47	1/16W	5%	RMC1/16 470JATP	J24185470		1-	A	D3
R 1360	CHIP RES.	100	1/16W	5%	RMC1/16 101JATP	J24185101		1-	A	D3
R 1361	CHIP RES.	3.3k	1/16W	5%	RMC1/16 332JATP	J24185332		1-	A	D3
R 1362	CHIP RES.	0	1/16W	5%	RMC1/16 000JATP	J24185000		1-	A	D3
R 1363	CHIP RES.	10k	1/16W	5%	RMC1/16 103JATP	J24185103		1-	A	D3
R 1364	CHIP RES.	1.5k	1/16W	5%	RMC1/16 152JATP	J24185152		1-	A	D3
R 1365	CHIP RES.	10k	1/16W	5%	RMC1/16 103JATP	J24185103		1-	A	D3
R 1366	CHIP RES.	10k	1/16W	5%	RMC1/16 103JATP	J24185103		1-	A	G1
R 1367	CHIP RES.	100k	1/16W	5%	RMC1/16 104JATP	J24185104		1-	A	F1
R 1368	CHIP RES.	47	1/16W	5%	RMC1/16 470JATP	J24185470		1-	A	H2
R 1369	CHIP RES.	100k	1/16W	5%	RMC1/16 104JATP	J24185104		1-	A	F1
R 1370	CHIP RES.	470	1/16W	5%	RMC1/16 471JATP	J24185471		1-	A	G2
R 1371	CHIP RES.	470	1/16W	5%	RMC1/16 471JATP	J24185471		1-	A	G2
R 1372	CHIP RES.	470	1/16W	5%	RMC1/16 471JATP	J24185471		1-	A	G2
R 1373	CHIP RES.	0	1/16W	5%	RMC1/16 000JATP	J24185000		1-	A	G2
R 1374	CHIP RES.	100k	1/16W	5%	RMC1/16 104JATP	J24185104		1-	A	G2
R 1375	CHIP RES.	33k	1/16W	5%	RMC1/16 333JATP	J24185333		1-	A	G2
R 1378	CHIP RES.	33	1/16W	5%	RMC1/16 330JATP	J24185330		1-	A	E4
R 1379	CHIP RES.	10	1/16W	5%	RMC1/16 100JATP	J24185100		1-	A	E4
R 1380	CHIP RES.	4.7	1/16W	5%	RMC1/16 4R7JATP	J24185479		1-	A	D5
R 1381	CHIP RES.	3.3	1/16W	5%	RMC1/16 3R3JATP	J24185339		1-	A	D4
R 1382	CHIP RES.	10	1/16W	5%	RMC1/16 100JATP	J24185100		1-	A	E4

REF	DESCRIPTION	VALUE	V/W	TOL.	MFR'S DESIG	YAESU P/N	VERS.	LOT	SIDE	LAY ADR
R 1383	CHIP RES.	390	1/16W	5%	RMC1/16 391JATP	J24185391		1-	A	D4
R 1384	CHIP RES.	470	1/16W	5%	RMC1/16 471JATP	J24185471		1-	A	D4
R 1385	CHIP RES.	3.3	1/16W	5%	RMC1/16 3R3JATP	J24185339		1-	A	D3
R 1386	CHIP RES.	2.2k	1/16W	5%	RMC1/16 222JATP	J24185222		1-	A	D3
R 1387	CHIP RES.	330	1/10W	5%	RMC1/10T 331J	J24205331		1-	A	C3
R 1388	CHIP RES.	100k	1/16W	5%	RMC1/16 104JATP	J24185104		1-	A	D1
R 1389	CHIP RES.	2.2k	1/16W	5%	RMC1/16 222JATP	J24185222		1-	A	D6
R 1390	CHIP RES.	47	1/16W	5%	RMC1/16 470JATP	J24185470		1-	A	C1
R 1391	CHIP RES.	47	1/16W	5%	RMC1/16 470JATP	J24185470		1-	A	D1
R 1392	CHIP RES.	100	1/16W	5%	RMC1/16 101JATP	J24185101		1-	A	D1
R 1393	CHIP RES.	33k	1/16W	5%	RMC1/16 333JATP	J24185333		1-	A	D6
R 1394	CHIP RES.	10k	1/16W	5%	RMC1/16 103JATP	J24185103		1-	A	C1
R 1395	CHIP RES.	0	1/16W	5%	RMC1/16 000JATP	J24185000		1-	A	D2
R 1396	CHIP RES.	10k	1/16W	5%	RMC1/16 103JATP	J24185103		1-	A	D1
R 1398	CHIP RES.	470	1/16W	5%	RMC1/16 471JATP	J24185471		1-	A	C1
R 1399	CHIP RES.	47k	1/16W	5%	RMC1/16 473JATP	J24185473		1-	A	B3
R 1400	CHIP RES.	0	1/16W	5%	RMC1/16 000JATP	J24185000		1-	A	D2
R 1401	CHIP RES.	47k	1/16W	5%	RMC1/16 473JATP	J24185473		1-	A	B3
R 1402	CHIP RES.	0	1/16W	5%	RMC1/16 000JATP	J24185000		1-	A	D2
R 1403	CHIP RES.	47k	1/16W	5%	RMC1/16 473JATP	J24185473		1-	A	B4
R 1404	CHIP RES.	47k	1/16W	5%	RMC1/16 473JATP	J24185473		1-	A	B4
R 1405	CHIP RES.	47k	1/16W	5%	RMC1/16 473JATP	J24185473		1-	A	B4
R 1406	CHIP RES.	1.5k	1/16W	5%	RMC1/16 152JATP	J24185152		1-	A	D3
R 1407	CHIP RES.	100	1/16W	5%	RMC1/16 101JATP	J24185101		1-	A	D3
R 1408	CHIP RES.	330	1/16W	5%	RMC1/16 331JATP	J24185331		1-	A	D3
R 1409	CHIP RES.	100	1/16W	5%	RMC1/16 101JATP	J24185101		1-	A	D3
R 1410	CHIP RES.	1k	1/16W	5%	RMC1/16 102JATP	J24185102		1-	A	F1
R 1411	CHIP RES.	10k	1/16W	5%	RMC1/16 103JATP	J24185103		1-	A	F1
R 1412	CHIP RES.	100k	1/16W	5%	RMC1/16 104JATP	J24185104		1-	A	F1
R 1413	CHIP RES.	100k	1/16W	5%	RMC1/16 104JATP	J24185104		1-	A	F1
R 1414	CHIP RES.	47k	1/16W	5%	RMC1/16 473JATP	J24185473		1-	A	G1
R 1415	CHIP RES.	33k	1/16W	5%	RMC1/16 333JATP	J24185333		1-	A	G1
R 1416	CHIP RES.	10k	1/16W	5%	RMC1/16 103JATP	J24185103		1-	A	F1
R 1417	CHIP RES.	22k	1/16W	5%	RMC1/16 223JATP	J24185223		1-	A	H2
R 1418	CHIP RES.	33k	1/16W	5%	RMC1/16 333JATP	J24185333		1-	A	H2
R 1419	CHIP RES.	4.7k	1/16W	5%	RMC1/16 472JATP	J24185472		1-	A	G2
R 1420	CHIP RES.	100k	1/16W	5%	RMC1/16 104JATP	J24185104		1-	A	G2
R 1421	CHIP RES.	100k	1/16W	5%	RMC1/16 104JATP	J24185104		1-	A	G2
R 1422	CHIP RES.	100k	1/16W	5%	RMC1/16 104JATP	J24185104		1-	A	G2
R 1423	CHIP RES.	470	1/10W	5%	RMC1/10T 471J	J24205471		1-	A	H2
R 1427	CHIP RES.	0	1/16W	5%	RMC1/16 000JATP	J24185000		1-	A	F1
R 1428	CHIP RES.	100k	1/16W	5%	RMC1/16 104JATP	J24185104		1-	A	F1
R 1429	CHIP RES.	100k	1/16W	5%	RMC1/16 104JATP	J24185104		1-	A	F1
R 1430	CHIP RES.	0	1/16W	5%	RMC1/16 000JATP	J24185000		1-	A	C3
R 1431	CHIP RES.	0	1/16W	5%	RMC1/16 000JATP	J24185000		1-	A	D3
R 1432	CHIP RES.	330	1/10W	5%	RMC1/10T 331J	J24205331		1-	A	D3
R 1433	CHIP RES.	5.6	1/16W	5%	RMC1/16 5R6JATP	J24185569		1-	A	D3
R 1434	CHIP RES.	0	1/16W	5%	RMC1/16 000JATP	J24185000		1-	A	C3
R 1435	CHIP RES.	330	1/10W	5%	RMC1/10T 331J	J24205331		1-	A	C4
R 1436	CHIP RES.	330	1/10W	5%	RMC1/10T 331J	J24205331		1-	A	C4
R 1437	CHIP RES.	330	1/16W	5%	RMC1/16 331JATP	J24185331		1-	A	D6
R 1438	CHIP RES.	18	1/16W	5%	RMC1/16 180JATP	J24185180		1-	A	D6
R 1439	CHIP RES.	330	1/16W	5%	RMC1/16 331JATP	J24185331		1-	A	D6
R 1440	CHIP RES.	100k	1/16W	1%	RMC1/16 104FTP	J24183104		1-	A	B1
R 1441	CHIP RES.	33k	1/16W	1%	RMC1/16 333FTP	J24183333		1-	A	B2
R 1442	CHIP RES.	100k	1/16W	1%	RMC1/16 104FTP	J24183104		1-	A	B1
R 1443	CHIP RES.	33k	1/16W	1%	RMC1/16 333FTP	J24183333		1-	A	B1
R 1444	CHIP RES.	220k	1/16W	5%	RMC1/16 224JATP	J24185224		1-	A	C1
R 1445	CHIP RES.	10k	1/16W	5%	RMC1/16 103JATP	J24185103		1-	A	C1
R 1446	CHIP RES.	100	1/16W	5%	RMC1/16 101JATP	J24185101		1-	A	C1
R 1447	CHIP RES.	100	1/16W	5%	RMC1/16 101JATP	J24185101		1-	A	B1
R 1448	CHIP RES.	47	1/16W	5%	RMC1/16 470JATP	J24185470		1-	A	C1
R 1449	CHIP RES.	470	1/16W	5%	RMC1/16 471JATP	J24185471		1-	A	C1
R 1450	CHIP RES.	220k	1/16W	5%	RMC1/16 224JATP	J24185224		1-	A	C1
R 1451	CHIP RES.	2.2k	1/16W	5%	RMC1/16 222JATP	J24185222		1-	A	C1
R 1453	CHIP RES.	10	1/16W	5%	RMC1/16 100JATP	J24185100		1-	A	F3
R 1454	CHIP RES.	33k	1/16W	5%	RMC1/16 333JATP	J24185333		1-	A	F2
R 1455	CHIP RES.	10k	1/16W	5%	RMC1/16 103JATP	J24185103		1-	A	F2
R 1456	CHIP RES.	470	1/16W	5%	RMC1/16 471JATP	J24185471		1-	A	B6
R 1457	CHIP RES.	1.2k	1/16W	5%	RMC1/16 122JATP	J24185122		1-	A	D2
R 1458	CHIP RES.	470	1/16W	5%	RMC1/16 471JATP	J24185471		1-	A	B6
R 1459	CHIP RES.	470	1/16W	5%	RMC1/16 471JATP	J24185471		1-	A	B6
R 1460	CHIP RES.	470	1/16W	5%	RMC1/16 471JATP	J24185471		1-	A	D2

REF	DESCRIPTION	VALUE	V/W	TOL.	MFR'S DESIG	YAESU P/N	VERS.	LOT	SIDE	LAY ADR
R 1461	CHIP RES.	47	1/16W	5%	RMC1/16 470JATP	J24185470		1-	A	D2
R 1462	CHIP RES.	470	1/4W	5%	RMC1/4 471JATP	J24245471		1-	A	D2
R 1463	CHIP RES.	1k	1/16W	5%	RMC1/16 102JATP	J24185102		1-	A	D2
R 1464	CHIP RES.	0	1/16W	5%	RMC1/16 000JATP	J24185000		1-	A	D2
R 1465	CHIP RES.	47	1/16W	5%	RMC1/16 470JATP	J24185470		1-	A	D2
R 1466	CHIP RES.	220	1/16W	5%	RMC1/16 221JATP	J24185221		1-	A	D2
R 1467	CHIP RES.	1k	1/16W	5%	RMC1/16 102JATP	J24185102		1-	A	D2
R 1468	CHIP RES.	390	1/16W	5%	RMC1/16 391JATP	J24185391		1-	A	D2
R 1469	CHIP RES.	680k	1/16W	5%	RMC1/16 684JATP	J24185684		1-	A	G1
R 1470	CHIP RES.	10k	1/16W	5%	RMC1/16 103JATP	J24185103		1-	A	F1
R 1471	CHIP RES.	3.3k	1/16W	5%	RMC1/16 332JATP	J24185332		1-	A	F2
R 1472	CHIP RES.	10k	1/16W	5%	RMC1/16 103JATP	J24185103		1-	A	G1
R 1473	CHIP RES.	33k	1/16W	5%	RMC1/16 333JATP	J24185333		1-	A	H2
R 1474	CHIP RES.	6.8k	1/16W	5%	RMC1/16 682JATP	J24185682		1-	A	H2
R 1475	CHIP RES.	1k	1/16W	5%	RMC1/16 102JATP	J24185102		1-	A	H2
R 1476	CHIP RES.	100k	1/16W	5%	RMC1/16 104JATP	J24185104		1-	A	G2
R 1477	CHIP RES.	270k	1/16W	5%	RMC1/16 274JATP	J24185274		1-	A	H2
R 1478	CHIP RES.	33k	1/16W	5%	RMC1/16 333JATP	J24185333		1-	A	H2
R 1479	CHIP RES.	330	1/10W	5%	RMC1/10T 331J	J24205331		1-	A	H2
R 1480	CHIP RES.	3.3k	1/16W	5%	RMC1/16 332JATP	J24185332		1-	A	E1
R 1481	CHIP RES.	100k	1/16W	5%	RMC1/16 104JATP	J24185104		1-	A	H2
R 1482	CHIP RES.	10k	1/16W	5%	RMC1/16 103JATP	J24185103		1-	A	H2
R 1483	CHIP RES.	1k	1/16W	5%	RMC1/16 102JATP	J24185102		1-	A	H2
R 1484	CHIP RES.	1k	1/16W	5%	RMC1/16 102JATP	J24185102		1-	A	F2
R 1485	CHIP RES.	100k	1/16W	5%	RMC1/16 104JATP	J24185104		1-	A	F2
R 1487	CHIP RES.	4.7k	1/16W	5%	RMC1/16 472JATP	J24185472		1-	A	E1
R 1488	CHIP RES.	100k	1/16W	5%	RMC1/16 104JATP	J24185104		1-	A	E1
R 1489	CHIP RES.	220	1/16W	5%	RMC1/16 221JATP	J24185221		1-	A	D3
R 1490	CHIP RES.	5.6	1/16W	5%	RMC1/16 5R6JATP	J24185569		1-	A	D3
R 1491	CHIP RES.	330	1/10W	5%	RMC1/10T 331J	J24205331		1-	A	D3
R 1492	CHIP RES.	33	1/16W	5%	RMC1/16 330JATP	J24185330		1-	A	B4
R 1493	CHIP RES.	33	1/16W	5%	RMC1/16 330JATP	J24185330		1-	A	B4
R 1494	CHIP RES.	33	1/16W	5%	RMC1/16 330JATP	J24185330		1-	A	B3
R 1495	CHIP RES.	330	1/10W	5%	RMC1/10T 331J	J24205331		1-	A	C3
R 1496	CHIP RES.	330	1/10W	5%	RMC1/10T 331J	J24205331		1-	A	C3
R 1497	CHIP RES.	100k	1/16W	5%	RMC1/16 104JATP	J24185104		1-	A	B1
R 1498	CHIP RES.	4.7k	1/16W	5%	RMC1/16 472JATP	J24185472		1-	A	B2
R 1499	CHIP RES.	4.7k	1/16W	5%	RMC1/16 472JATP	J24185472		1-	A	C1
R 1501	CHIP RES.	1k	1/16W	5%	RMC1/16 102JATP	J24185102		1-	A	C2
R 1502	CHIP RES.	0	1/16W	5%	RMC1/16 000JATP	J24185000		1-	A	C1
R 1504	CHIP RES.	100	1/16W	1%	RMC1/16 101FTP	J24183101		1-	A	C2
R 1505	CHIP RES.	100	1/16W	1%	RMC1/16 101FTP	J24183101		1-	A	C2
R 1507	CHIP RES.	100	1/16W	1%	RMC1/16 101FTP	J24183101		1-	A	C2
R 1508	CHIP RES.	100	1/16W	1%	RMC1/16 101FTP	J24183101		1-	A	C2
R 1509	CHIP RES.	8.2k	1/16W	5%	RMC1/16 822JATP	J24185822		1-	A	C2
R 1510	CHIP RES.	10	1/10W	5%	RMC1/10T 100J	J24205100		1-	A	C2
R 1511	CHIP RES.	10	1/4W	5%	RMC1/4 100JATP	J24245100		1-	A	D2
R 1512	CHIP RES.	220	1/16W	5%	RMC1/16 221JATP	J24185221		1-	A	F2
R 1513	CHIP RES.	56k	1/16W	1%	RMC1/16 563FTP	J24183563		1-	A	C1
R 1514	CHIP RES.	100k	1/16W	1%	RMC1/16 104FTP	J24183104		1-	A	C1
R 1515	CHIP RES.	100k	1/16W	1%	RMC1/16 104FTP	J24183104		1-	A	C2
R 1516	CHIP RES.	820	1/16W	5%	RMC1/16 821JATP	J24185821		1-	A	E2
R 1517	CHIP RES.	1.8k	1/16W	5%	RMC1/16 182JATP	J24185182		1-	A	D2
R 1518	CHIP RES.	33k	1/16W	5%	RMC1/16 333JATP	J24185333		1-	A	D2
R 1519	CHIP RES.	1.2k	1/16W	5%	RMC1/16 122JATP	J24185122		1-	A	E2
R 1520	CHIP RES.	10k	1/16W	5%	RMC1/16 103JATP	J24185103		1-	A	D2
R 1521	CHIP RES.	1.8k	1/16W	5%	RMC1/16 182JATP	J24185182		1-	A	E2
R 1522	CHIP RES.	1.2k	1/16W	5%	RMC1/16 122JATP	J24185122		1-	A	E2
R 1523	CHIP RES.	0	1/16W	5%	RMC1/16 000JATP	J24185000		1-	A	E2
R 1524	CHIP RES.	47	1/16W	5%	RMC1/16 470JATP	J24185470		1-	A	E2
R 1525	CHIP RES.	470	1/4W	5%	RMC1/4 471JATP	J24245471		1-	A	E2
R 1526	CHIP RES.	100k	1/16W	5%	RMC1/16 104JATP	J24185104		1-	A	F2
R 1527	CHIP RES.	33k	1/16W	5%	RMC1/16 333JATP	J24185333		1-	A	F2
R 1528	CHIP RES.	120k	1/16W	5%	RMC1/16 124JATP	J24185124		1-	A	F2
R 1529	CHIP RES.	33k	1/16W	5%	RMC1/16 333JATP	J24185333		1-	A	F2
R 1530	CHIP RES.	47	1/16W	5%	RMC1/16 470JATP	J24185470		1-	A	F2
R 1531	CHIP RES.	22k	1/16W	5%	RMC1/16 223JATP	J24185223		1-	A	F2
R 1533	CHIP RES.	680	1/16W	5%	RMC1/16 681JATP	J24185681		1-	A	F2
R 1535	CHIP RES.	120k	1/16W	5%	RMC1/16 124JATP	J24185124		1-	A	F2
R 1536	CHIP RES.	1	1W	5%	RMC1 1R0JTE	J24305010		1-	A	H2
R 1537	CHIP RES.	33k	1/16W	5%	RMC1/16 333JATP	J24185333		1-	A	F2
R 1538	CHIP RES.	10k	1/16W	5%	RMC1/16 103JATP	J24185103		1-	A	H2
R 1539	CHIP RES.	0	1/16W	5%	RMC1/16 000JATP	J24185000		1-	A	F2

REF	DESCRIPTION	VALUE	V/W	TOL.	MFR'S DESIG	YAESU P/N	VERS.	LOT	SIDE	LAY ADR
R 1540	CHIP RES.	470	1/16W	5%	RMC1/16 471JATP	J24185471		1-	A	H1
R 1541	CHIP RES.	47	1/16W	5%	RMC1/16 470JATP	J24185470		1-	A	H1
R 1542	CHIP RES.	0	1/10W	5%	RMC1/10T 000J	J24205000		1-	A	H2
R 1543	CHIP RES.	0	1/10W	5%	RMC1/10T 000J	J24205000		1-	A	H2
R 1544	CHIP RES.	470	1/2W	5%	RMC1/2 471JCTP	J24275471		1-	A	H2
R 1545	CHIP RES.	10k	1/16W	5%	RMC1/16 103JATP	J24185103		1-	A	D1
R 1549	CHIP RES.	1k	1/16W	5%	RMC1/16 102JATP	J24185102		1-	A	C2
R 1552	CHIP RES.	10	1/10W	5%	RMC1/10T 100J	J24205100		1-	A	C2
R 1553	CHIP RES.	330	1/10W	5%	RMC1/10T 331J	J24205331		1-	A	B3
R 1555	CHIP RES.	220k	1/16W	5%	RMC1/16 224JATP	J24185224		1-	A	C2
R 1557	CHIP RES.	0	1/16W	5%	RMC1/16 000JATP	J24185000		1-	A	B2
R 1558	CHIP RES.	2.2k	1/16W	5%	RMC1/16 222JATP	J24185222		1-	A	C2
R 1559	CHIP RES.	0	1/16W	5%	RMC1/16 000JATP	J24185000		1-	A	C2
R 1560	CHIP RES.	1k	1/16W	5%	RMC1/16 102JATP	J24185102		1-	A	C2
R 1561	CHIP RES.	33k	1/16W	5%	RMC1/16 333JATP	J24185333		1-	A	C2
R 1562	CHIP RES.	10k	1/16W	5%	RMC1/16 103JATP	J24185103		1-	A	C2
R 1563	CHIP RES.	120	1/16W	5%	RMC1/16 121JATP	J24185121		1-	A	C2
R 1566	CHIP RES.	0	1/16W	5%	RMC1/16 000JATP	J24185000		1-	A	D2
R 1568	CHIP RES.	56k	1/16W	1%	RMC1/16 563FTP	J24183563		1-	A	C2
R 1570	CHIP RES.	1k	1/16W	5%	RMC1/16 102JATP	J24185102		1-	A	E2
R 1571	CHIP RES.	22k	1/16W	5%	RMC1/16 223JATP	J24185223		1-	A	E2
R 1572	CHIP RES.	2.2k	1/16W	5%	RMC1/16 222JATP	J24185222		1-	A	E2
R 1573	CHIP RES.	22k	1/16W	5%	RMC1/16 223JATP	J24185223		1-	A	E2
R 1574	CHIP RES.	470	1/16W	5%	RMC1/16 471JATP	J24185471		1-	A	F2
R 1575	CHIP RES.	1k	1/16W	5%	RMC1/16 102JATP	J24185102		1-	A	F2
R 1576	CHIP RES.	150k	1/16W	1%	RMC1/16 154FTP	J24183154		1-	A	F2
R 1578	CHIP RES.	220k	1/16W	1%	RMC1/16 224FTP	J24183224		1-	A	F2
R 1579	CHIP RES.	10k	1/16W	5%	RMC1/16 103JATP	J24185103		1-	A	F2
R 1580	CHIP RES.	3.3k	1/16W	1%	RMC1/16 332FTP	J24183332		1-	A	F2
R 1581	CHIP RES.	6.8k	1/16W	1%	RMC1/16 682FTP	J24183682		1-	A	F2
R 1582	CHIP RES.	3.3k	1/16W	5%	RMC1/16 332JATP	J24185332		1-	A	F2
R 1584	CHIP RES.	220	1/16W	5%	RMC1/16 221JATP	J24185221		1-	A	G1
R 1585	CHIP RES.	330	1/4W	5%	RMC1/4 331JATP	J24245331		1-	A	H1
R 1586	CHIP RES.	1k	1/16W	5%	RMC1/16 102JATP	J24185102		1-	A	G1
R 1587	CHIP RES.	10k	1/16W	5%	RMC1/16 103JATP	J24185103		1-	A	H2
R 1587	CHIP RES.	5.6k	1/16W	5%	RMC1/16 562JATP	J24185562		3	A	H2
R 1587	CHIP RES.	10k	1/16W	5%	RMC1/16 103JATP	J24185103		4-	A	H2
R 1588	CHIP RES.	3.3k	1/16W	5%	RMC1/16 332JATP	J24185332		1-	A	H2
R 1589	CHIP RES.	100	1/16W	5%	RMC1/16 101JATP	J24185101		1-	A	C2
R 1590	CHIP RES.	22k	1/16W	5%	RMC1/16 223JATP	J24185223		1-	A	B2
R 1594	CHIP RES.	1k	1/16W	5%	RMC1/16 102JATP	J24185102		1-	A	D5
R 1595	CHIP RES.	470	1/16W	5%	RMC1/16 471JATP	J24185471		1-	A	D5
R 1597	CHIP RES.	0	1/16W	5%	RMC1/16 000JATP	J24185000		1-	A	H4
RL1001	RELAY		DC12V		FTR-B3GA012Z-B10 DC12V	M1190201		1-	A	A1
RL1002	RELAY		DC12V		FTR-B3GA012Z-B10 DC12V	M1190201		1-	A	A1
RL1003	RELAY		DC12V		FTR-B3GA012Z-B10 DC12V	M1190201		1-	A	B1
RL1004	RELAY		DC12V		FTR-B3GA012Z-B10 DC12V	M1190201		1-	A	A2
RL1005	RELAY		DC12V		FTR-B3GA012Z-B10 DC12V	M1190201		1-	A	C5
RL1006	RELAY		DC12V		FTR-B3GA012Z-B10 DC12V	M1190201		1-	A	C5
RL1007	RELAY		DC12V		FTR-B3GA012Z-B10 DC12V	M1190201		1-	A	C4
RL1008	RELAY		DC12V		FTR-B4SA012Z-B05	M1190209		1-	A	H1
S 1001	SLIDE SWITCH				SSSS820201	N6090107		1-	A	B2
T 1001	BALUN TRANSFOMER$				#458PT-1565	L0190273		1-	A	F6
T 1002	BALUN TRANSFOMER$				#458PT-1565	L0190273		1-	A	F6
T 1003	BALUN TRANSFOMER$				070812735D	L0023046		1-	A	G6
T 1004	BALUN TRANSFOMER$				#458PT-1565	L0190273		1-	A	E5
T 1005	BALUN TRANSFOMER$				120491012A	L0023160		1-	A	C6
T 1006	BALUN TRANSFOMER$				120491012A	L0023160		1-	A	C6
T 1007	BALUN TRANSFOMER$				#458PT-1565	L0190273		1-	A	E4
T 1008	COIL 07RF	160MHz			160M R12-K906X	L0022056		1-	A	C5
T 1009	BALUN TRANSFOMER$				#458PT-1917	L0023156		1-	A	C5
T 1010	BALUN TRANSFOMER$				#458PT-1586	L0190276		1-	A	D4
T 1011	BALUN TRANSFOMER$				#617DS-1710	L0190275		1-	A	D5
T 1012	COIL 05RF				74.62M 010812302	L0022781		1-	A	E4
T 1013	COIL 05RF				74.62M 010812302	L0022781		1-	A	E3
T 1014	BALUN TRANSFOMER$				#458PT-1917	L0023156		1-	A	C4
T 1015	COIL 07RF	40.455MHz			M7-T1 R-12W083A	L0022920		1-	A	D4
T 1016	BALUN TRANSFOMER$				#458DS-1757	L0023157		1-	A	D4
T 1017	COIL 05RF				74.62M 010812302	L0022781		1-	A	D3
T 1018	COIL 07RF	40.455MHz			M7-T1 R-12W083A	L0022920		1-	A	D4
T 1019	BALUN TRANSFOMER$				120491012A	L0023160		1-	A	D4
T 1020	BALUN TRANSFOMER$				#458PT-1586	L0190276		1-	A	D5
T 1021	BALUN TRANSFOMER$				080812771A	L0023078		1-	A	D2

REF	DESCRIPTION	VALUE	V/W	TOL.	MFR'S DESIG	YAESU P/N	VERS.	LOT	SIDE	LAY ADR
T 1022	BALUN TRANSFOMERS				080812771A	L0023078		1-	A	E2
T 1024	BALUN TRANSFOMERS				#458DB-1632	L0023158		1-	A	D3
T 1025	COIL 05RF	455kHz			030812471 57H5B 455K	L0022780		1-	A	D2
T 1026	COIL 05RF				74.62M 010812302	L0022781		1-	A	D3
T 1027	BALUN TRANSFOMERS				120491013	L0023161		1-	A	C3
T 1028	BALUN TRANSFOMERS				120491021	L0023163		1-	A	C3
T 1029	COIL 05RF	455kHz			030812471 57H5B 455K	L0022780		1-	A	F2
T 1030	BALUN TRANSFOMERS				120491013	L0023161		1-	A	C3
T 1031	BALUN TRANSFOMERS				120491021	L0023163		1-	A	C3
T 1032	COIL 07RF	47MHz			47.0M	L0021546		1-	A	D2
T 1033	BALUN TRANSFOMERS				080812771A	L0023078		1-	A	C2
T 1034	COIL 07RF	47.1MHz			47.1M R12-M411A	L0021225		1-	A	C2
T 1035	BALUN TRANSFOMERS				#458PT-1917	L0023156		1-	A	C2
T 1036	BALUN TRANSFOMERS				#458PT-1586	L0190276		1-	A	C2
T 1037	BALUN TRANSFOMERS				080812769	L0023049		1-	A	C2
T 1038	BALUN TRANSFOMERS				080812769	L0023049		1-	A	D4
TP1036	CHECK TERMINAL				RCTCTE	Q5000103		1-	A	C2
TP1041	CHECK TERMINAL				RCTCTE	Q5000103		1-	A	G5
TP1042	CHECK TERMINAL				RCTCTE	Q5000103		1-	A	C5
TP1054	CHECK TERMINAL				RCTCTE	Q5000103		1-	A	B1
TP1058	CHECK TERMINAL				RCTCTE	Q5000103		1-	A	E2
TP1062	CHECK TERMINAL				RCTCTE	Q5000103		1-	A	D2
XF1001	XTAL FILTER				MFT40R2 40.455MHz 15kHz	H1102386		1-	A	D4
XF1002	XTAL FILTER				MFT40R2 40.455MHz 15kHz	H1102386		1-	A	D3
XF1003	XTAL FILTER				MFT40L 40.455MHz 6kHz	H1102387		1-	A	C3
XF1004	XTAL FILTER				MFT40F 40.455MHz 3kHz	H1102388		1-	A	C3
XF1004	XTAL FILTER				MFT40F3 40.455MHZ	H1102485		4-	A	C3
	SHIELD CASE				(21X25)	RA0830300		1-		
	SHIELD CASE COVER				(21X25)	RA0830400		1-		
	SHIELD CASE				(20X51)	RA0830700		1-		
	SHIELD CASE COVER				(20X51)	RA0830800		1-		
	SHIELD CASE					RA0659300		1-		
	SHIELD CASE COVER				(37x30.5)	RA1152400		1-		
	SHIELD CASE				(BPF)	RA0961600		1-		
	SHIELD CASE COVER				(BPF)	RA0961700		1-		

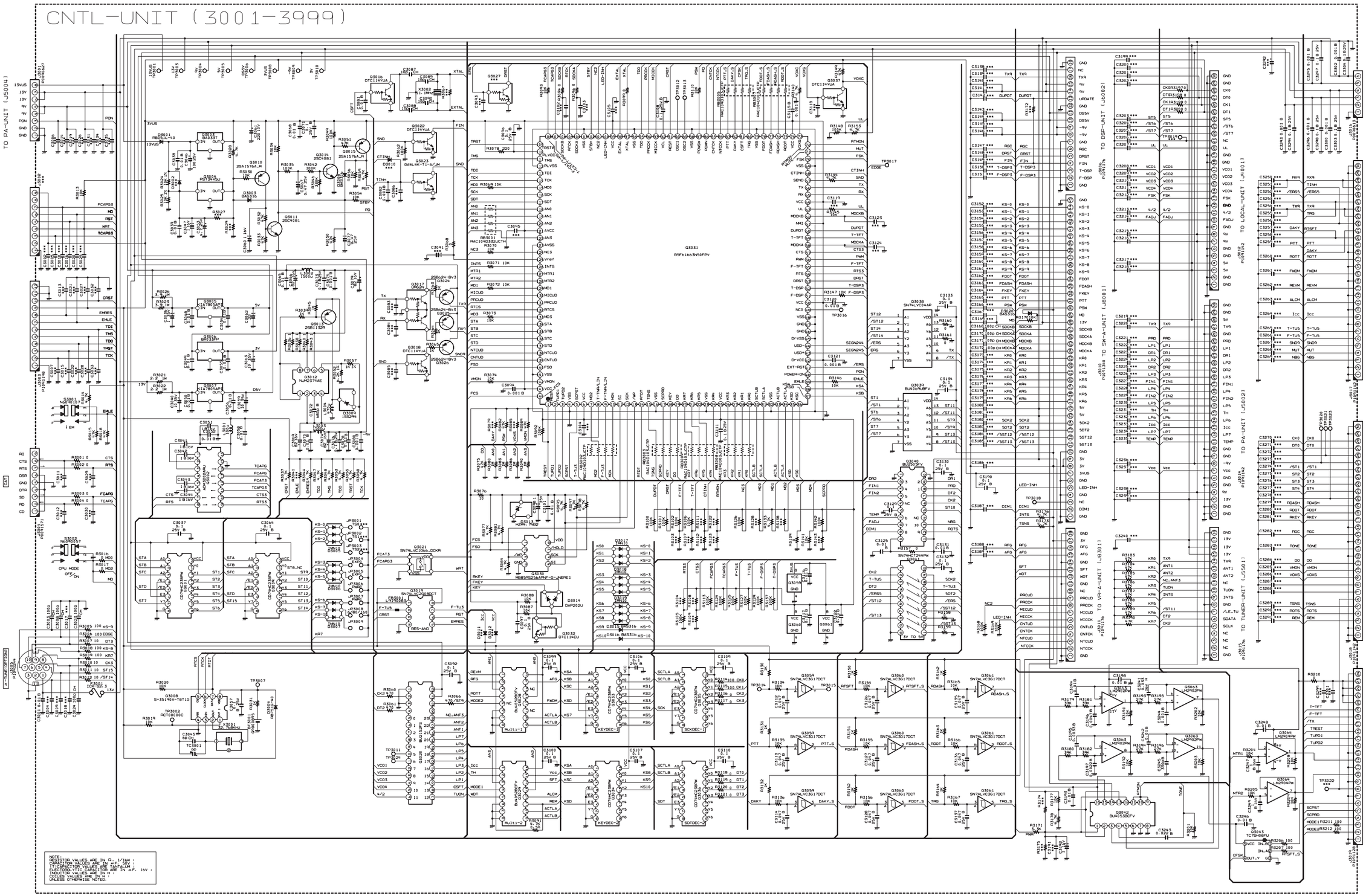
CNTL-UNIT (3001-3999)
TO PA-UNIT (J5004)
TO MAIN-UNIT (J1022)
TO DSP-UNIT (J6002)
TO LOCAL-UNIT (J4001)
TO SW-A-UNIT (J8001)
TO VR-A-UNIT (J8501)
TO PA-UNIT (J5002)
TO TUNER-UNIT (J5501)
TO DISPLAY-I-UNIT (J7002)
TO MAIN-UNIT (J1007)
A-TUNE(OPTION)
CAT
Q3031
R5F61663N50FPV
NOTE:
RESISTOR VALUES ARE IN Ω, 1/16W :
CAPACITOR VALUES ARE IN mF, 50V :
(*)CAPACITOR VALUES ARE TANTALUM
(**)CAPACITOR VALUES ARE IN mF, 16V :
INDUCTOR VALUES ARE IN H :
COILS VALUES ARE IN H :
UNLESS OTHERWISE NOTED.

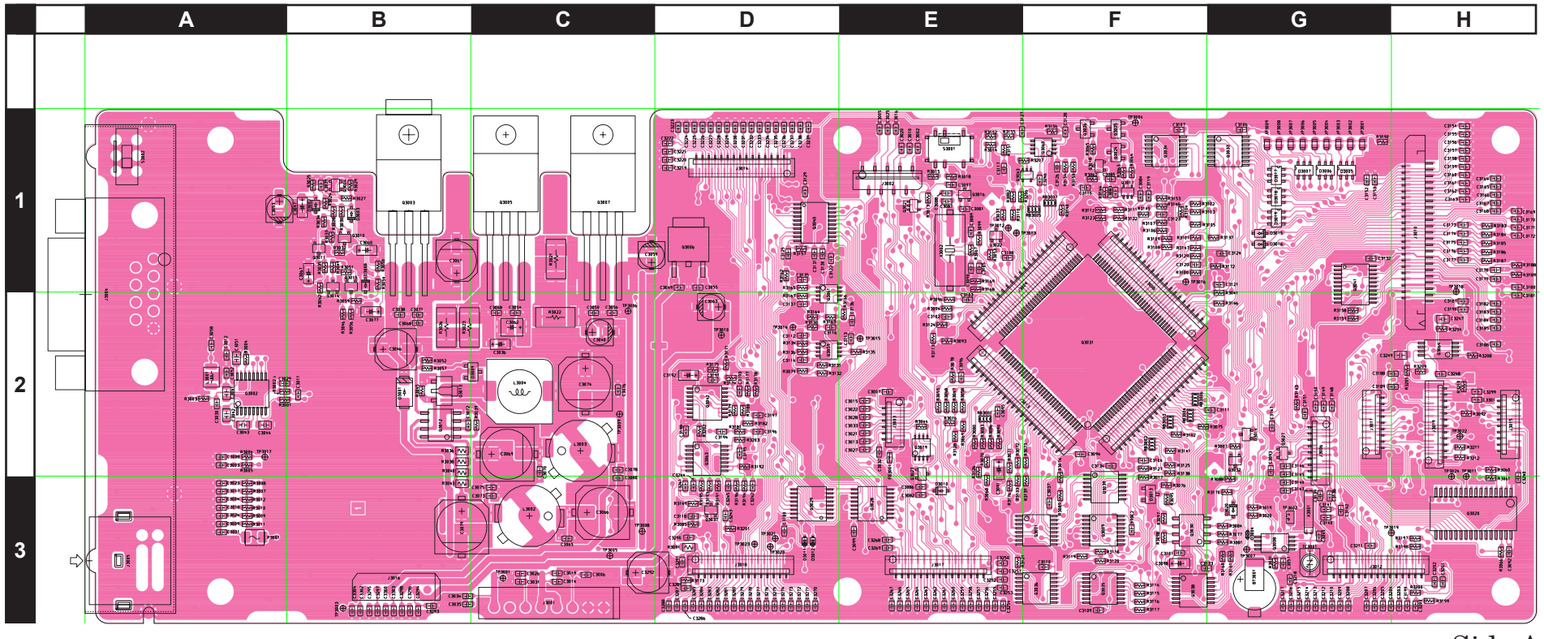

Side A

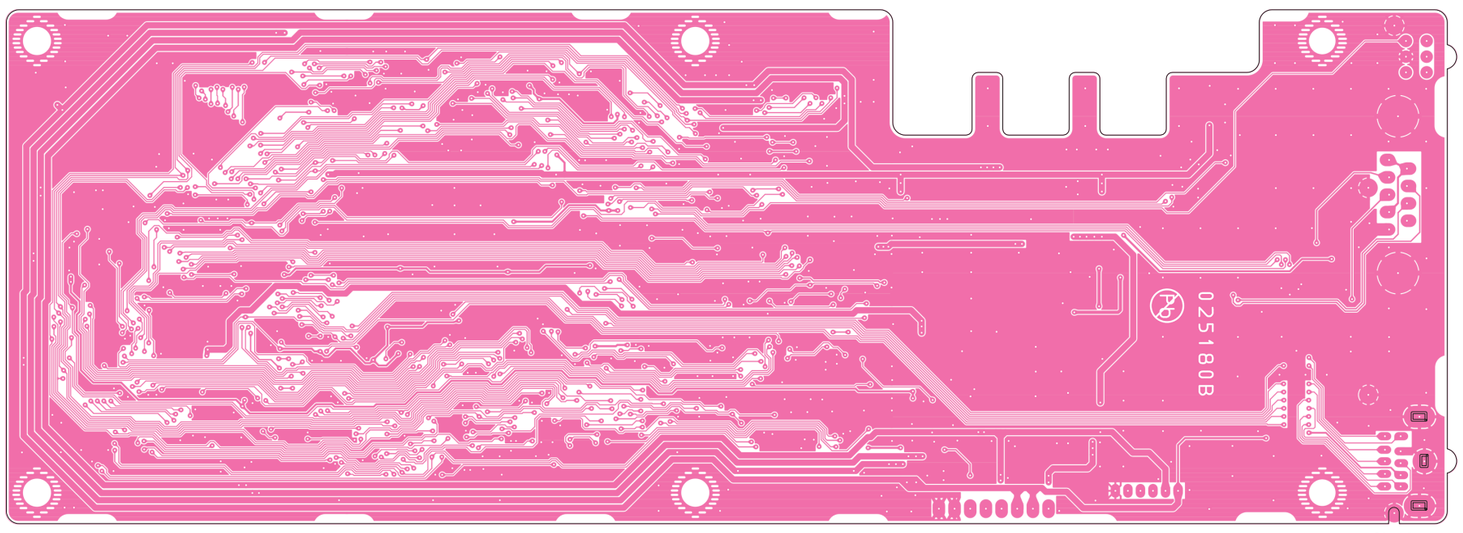

Side B

CNTL-UNIT (3001-3999)

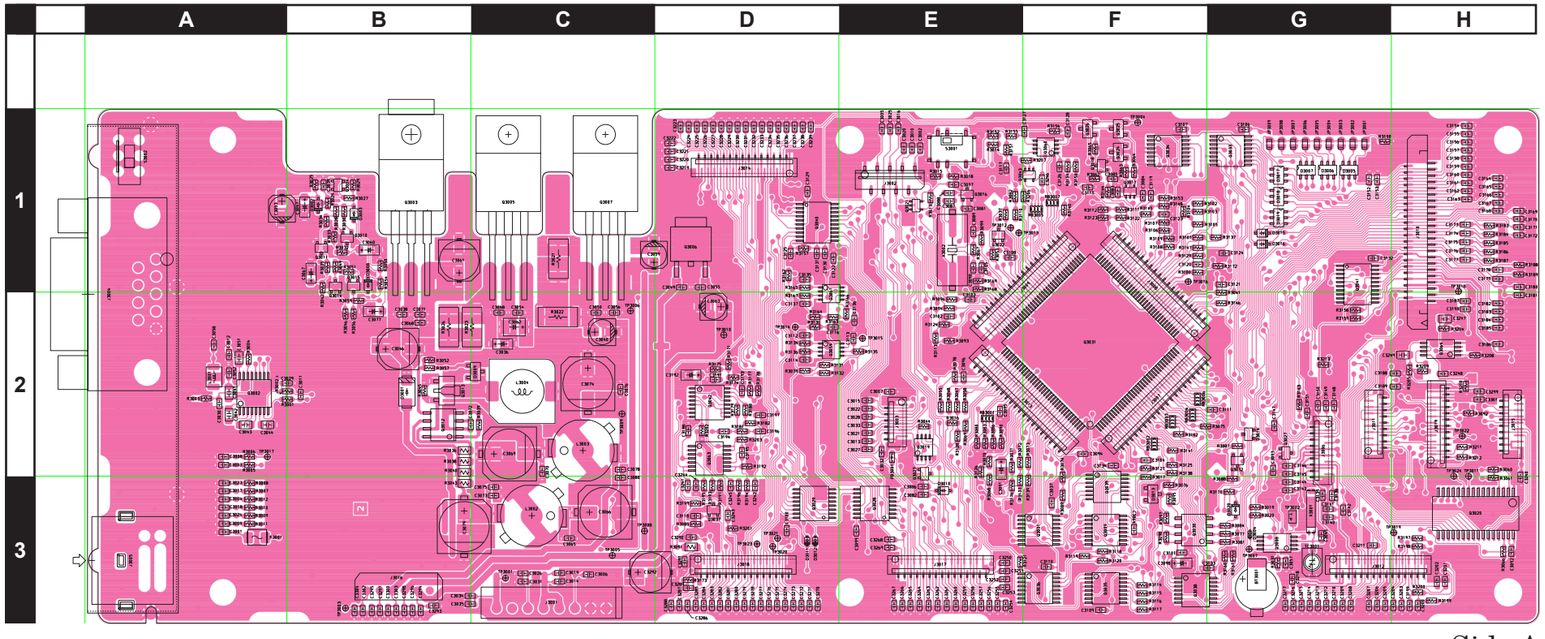

Side A

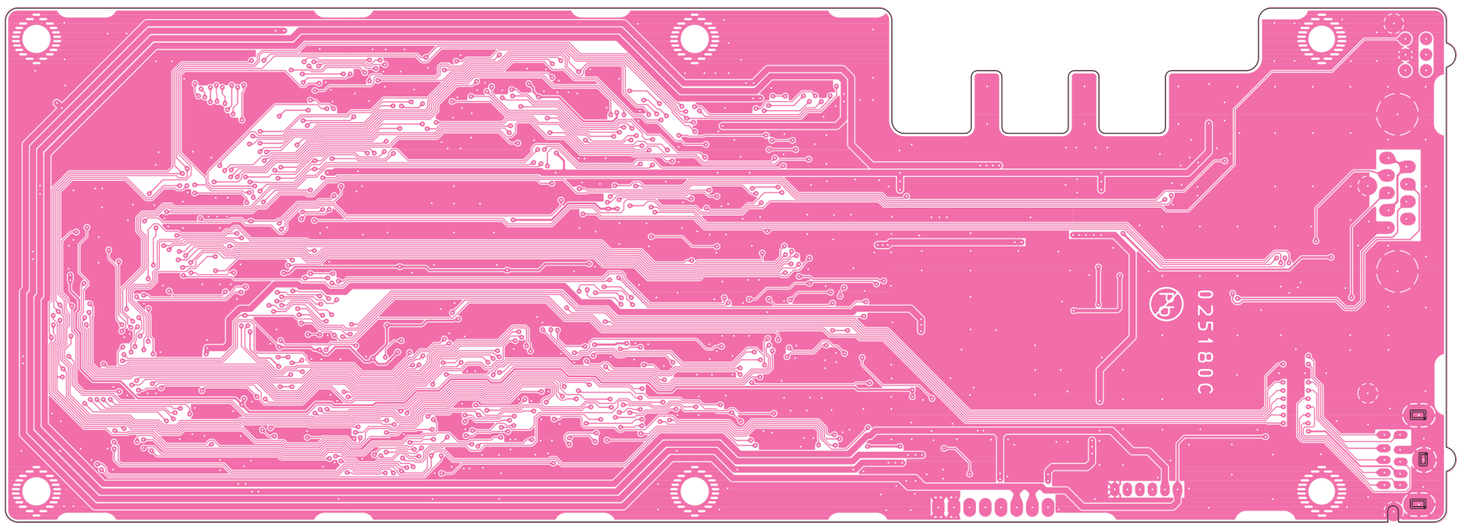

Side B

REF	DESCRIPTION	VALUE	V/W	TOL.	MFR'S DESIG	YAESU P/N	VERS.	LOT	SIDE	LAY ADR
	PCB with Components (w/o Q3003, Q3005, Q3007)					CS2181702 DST:USA CS2181703 DST:EXP CS2181704 DST:EU CS2181705 DST:UK				
C 3001	CHIP CAP.	0.01uF	50V	B	GRM188B11H103KA01D	K22174823		1-	A	A3
C 3003	CHIP CAP.	100pF	50V	CH	GRM1882C1H101JA01D	K22174235		1-	A	A2
C 3008	CHIP CAP.	100pF	50V	CH	GRM1882C1H101JA01D	K22174235		1-	A	A2
C 3023	CHIP CAP.	100pF	50V	CH	GRM1882C1H101JA01D	K22174235		1-	A	A2
C 3024	CHIP CAP.	100pF	50V	CH	GRM1882C1H101JA01D	K22174235		1-	A	A3
C 3036	CHIP TA.CAP.	1uF	35V		TEESVA1V105M8R	K78160032		1-	A	C2
C 3037	CHIP CAP.	0.1uF	25V	B	GRM188B11E104KA01D	K22144814		1-	A	F3
C 3038	CHIP CAP.	0.01uF	50V	B	GRM188B11H103KA01D	K22174823		1-	A	B2
C 3039	CHIP CAP.	0.01uF	50V	B	GRM188B11H103KA01D	K22174823		1-	A	B1
C 3040	AL.ELECTRO.CAP.	10uF	35V		EEE1VA100WR	K48160006		1-	A	C2
C 3041	CHIP CAP.	1uF	16V	B	GRM21BB11C105KA01L	K22120809		1-	A	A2
C 3042	CHIP CAP.	1uF	16V	B	GRM21BB11C105KA01L	K22120809		1-	A	A2
C 3043	CHIP CAP.	1uF	16V	B	GRM21BB11C105KA01L	K22120809		1-	A	A2
C 3044	CHIP CAP.	1uF	16V	B	GRM21BB11C105KA01L	K22120809		1-	A	A2
C 3045	CHIP CAP.	6pF	50V	CH	GRM1882C1H6R0DA01D	K22174207		1-	A	G3
C 3046	AL.ELECTRO.CAP.	100uF	25V		EMVA250ADA101MF80G	K48140016		1-	A	B2
C 3047	CHIP TA.CAP.	1uF	16V		TEESVA1C105M8R	K78120009		1-	A	B1
C 3048	CHIP CAP.	0.01uF	50V	B	GRM188B11H103KA01D	K22174823		1-	A	C2
C 3049	CHIP CAP.	0.01uF	50V	B	GRM188B11H103KA01D	K22174823		1-	A	D1
C 3050	CHIP CAP.	0.01uF	50V	B	GRM188B11H103KA01D	K22174823		1-	A	C2
C 3051	CHIP CAP.	1uF	16V	B	GRM21BB11C105KA01L	K22120809		1-	A	A2
C 3052	CHIP CAP.	0.01uF	50V	B	GRM188B11H103KA01D	K22174823		1-	A	A2
C 3053	AL.ELECTRO.CAP.	4.7uF	25V		UWX1E4R7MCL1GB	K48140012		1-	A	A1
C 3054	CHIP CAP.	0.01uF	50V	B	GRM188B11H103KA01D	K22174823		1-	A	C2
C 3055	CHIP CAP.	0.01uF	50V	B	GRM188B11H103KA01D	K22174823		1-	A	D1
C 3056	CHIP CAP.	0.01uF	50V	B	GRM188B11H103KA01D	K22174823		1-	A	C2
C 3057	CHIP CAP.	0.1uF	25V	B	GRM188B11E104KA01D	K22144814		1-	A	G3
C 3058	CHIP CAP.	0.01uF	50V	B	GRM188B11H103KA01D	K22174823		1-	A	A2
C 3059	AL.ELECTRO.CAP.	10uF	35V		EEE1VA100WR	K48160006		1-	A	C1
C 3060	CHIP TA.CAP.	1uF	16V		TEESVA1C105M8R	K78120009		1-	A	B1
C 3061	AL.ELECTRO.CAP.	220uF	10V		EEE1AA221XP	K48100007		1-	A	B1
C 3062	CHIP TA.CAP.	22uF			TPSB226M016Y0600	K78120075		1-	A	C2
C 3063	AL.ELECTRO.CAP.	10uF	35V		EEE1VA100WR	K48160006		1-	A	D2
C 3064	CHIP CAP.	0.1uF	25V	B	GRM188B11E104KA01D	K22144814		1-	A	F3
C 3065	CHIP CAP.	0.01uF	50V	B	GRM188B11H103KA01D	K22174823		1-	A	C3
C 3066	AL.ELECTRO.CAP.	82uF	16V		APXA160ARA820MH70G	K48120022		1-	A	C3
C 3067	CHIP TA.CAP.	0.47uF	25V		TEESVA1E474M8R	K78140009		1-	A	B1
C 3068	CHIP CAP.	0.01uF	50V	B	GRM188B11H103KA01D	K22174823		1-	A	B2
C 3069	AL.ELECTRO.CAP.	82uF	16V		APXA160ARA820MH70G	K48120022		1-	A	C2
C 3070	CHIP CAP.	0.01uF	50V	B	GRM188B11H103KA01D	K22174823		1-	A	C2
C 3071	CHIP CAP.	0.1uF	25V	B	GRM188B11E104KA01D	K22144814		1-	A	B2
C 3072	CHIP CAP.	680pF	50V	B	GRM188B11H681KA01D	K22174807		1-	A	B2
C 3073	CHIP CAP.	0.1uF	25V	B	GRM188B11E104KA01D	K22144814		1-	A	C3
C 3074	AL.ELECTRO.CAP.	82uF	16V		APXA160ARA820MH70G	K48120022		1-	A	C2
C 3075	CHIP CAP.	0.001uF	50V	B	GRM188B11H102KA01D	K22174821		1-	A	C3
C 3076	CHIP CAP.	0.1uF	25V	B	GRM188B11E104KA01D	K22144814		1-	A	C2
C 3077	CHIP TA.CAP.	0.47uF	25V		TEESVA1E474M8R	K78140009		1-	A	B2
C 3078	CHIP CAP.	0.01uF	50V	B	GRM188B11H103KA01D	K22174823		1-	A	C2
C 3079	AL.ELECTRO.CAP.	82uF	16V		APXA160ARA820MH70G	K48120022		1-	A	B3
C 3080	CHIP CAP.	0.001uF	50V	B	GRM188B11H102KA01D	K22174821		1-	A	C2
C 3081	CHIP CAP.	0.01uF	50V	B	GRM188B11H103KA01D	K22174823		1-	A	E1
C 3082	CHIP CAP.	0.001uF	50V	B	GRM188B11H102KA01D	K22174821		1-	A	E3
C 3087	CHIP CAP.	10pF	50V	CH	GRM1882C1H100JA01D	K22174211		1-	A	E1
C 3088	CHIP CAP.	10pF	50V	CH	GRM1882C1H100JA01D	K22174211		1-	A	E1
C 3089	CHIP CAP.	10pF	50V	CH	GRM1882C1H100JA01D	K22174211		1-	A	E1
C 3090	CHIP CAP.	10pF	50V	CH	GRM1882C1H100JA01D	K22174211		1-	A	E1
C 3092	CHIP CAP.	0.1uF	25V	B	GRM188B11E104KA01D	K22144814		1-	A	H3
C 3094	CHIP CAP.	0.001uF	50V	B	GRM188B11H102KA01D	K22174821		1-	A	F2
C 3096	CHIP CAP.	0.1uF	25V	B	GRM188B11E104KA01D	K22144814		1-	A	E2
C 3097	CHIP CAP.	0.1uF	25V	B	GRM188B11E104KA01D	K22144814		1-	A	E1
C 3098	CHIP TA.CAP.	1uF	35V		TEESVA1V105M8R	K78160032		1-	A	F3
C 3099	CHIP CAP.	0.1uF	25V	B	GRM188B11E104KA01D	K22144814		1-	A	E3
C 3100	CHIP CAP.	0.1uF	25V	B	GRM188B11E104KA01D	K22144814		1-	A	D3
C 3101	CHIP CAP.	0.01uF	50V	B	GRM188B11H103KA01D	K22174823		1-	A	F3
C 3106	CHIP CAP.	0.1uF	25V	B	GRM188B11E104KA01D	K22144814		1-	A	G1
C 3107	CHIP CAP.	0.1uF	25V	B	GRM188B11E104KA01D	K22144814		1-	A	F1
C 3108	CHIP CAP.	0.1uF	25V	B	GRM188B11E104KA01D	K22144814		1-	A	E1
C 3109	CHIP CAP.	0.1uF	25V	B	GRM188B11E104KA01D	K22144814		1-	A	F3
C 3110	CHIP CAP.	0.1uF	25V	B	GRM188B11E104KA01D	K22144814		1-	A	F3

REF	DESCRIPTION	VALUE	V/W	TOL.	MFR'S DESIG	YAESU P/N	VERS.	LOT	SIDE	LAY ADR
C 3111	CHIP CAP.	0.1uF	25V	B	GRM188B11E104KA01D	K22144814		1-	A	F2
C 3112	CHIP CAP.	0.047uF	25V	B	GRM188B11E473KA01D	K22144811		1-	A	D2
C 3113	CHIP CAP.	0.047uF	25V	B	GRM188B11E473KA01D	K22144811		1-	A	E2
C 3114	CHIP CAP.	0.047uF	25V	B	GRM188B11E473KA01D	K22144811		1-	A	D2
C 3115	CHIP CAP.	0.001uF	50V	B	GRM188B11H102KA01D	K22174821		1-	A	F1
C 3116	CHIP CAP.	0.01uF	50V	B	GRM188B11H103KA01D	K22174823		1-	A	D2
C 3117	CHIP CAP.	0.01uF	50V	B	GRM188B11H103KA01D	K22174823		1-	A	E1
C 3120	CHIP CAP.	0.01uF	50V	B	GRM188B11H103KA01D	K22174823		1-	A	F1
C 3121	CHIP CAP.	0.001uF	50V	B	GRM188B11H102KA01D	K22174821		1-	A	F1
C 3122	CHIP CAP.	0.01uF	50V	B	GRM188B11H103KA01D	K22174823		1-	A	D1
C 3125	CHIP CAP.	0.01uF	50V	B	GRM188B11H103KA01D	K22174823		1-	A	D1
C 3126	CHIP CAP.	0.047uF	25V	B	GRM188B11E473KA01D	K22144811		1-	A	F1
C 3127	CHIP CAP.	0.047uF	25V	B	GRM188B11E473KA01D	K22144811		1-	A	E1
C 3128	CHIP CAP.	0.047uF	25V	B	GRM188B11E473KA01D	K22144811		1-	A	F1
C 3129	CHIP CAP.	0.1uF	25V	B	GRM188B11E104KA01D	K22144814		1-	A	D1
C 3130	CHIP CAP.	0.1uF	25V	B	GRM188B11E104KA01D	K22144814		1-	A	D1
C 3131	CHIP CAP.	0.01uF	50V	B	GRM188B11H103KA01D	K22174823		1-	A	D1
C 3132	CHIP CAP.	0.1uF	25V	B	GRM188B11E104KA01D	K22144814		1-	A	G1
C 3133	CHIP CAP.	0.1uF	25V	B	GRM188B11E104KA01D	K22144814		1-	A	F3
C 3134	CHIP CAP.	0.1uF	25V	B	GRM188B11E104KA01D	K22144814		1-	A	F2
C 3135	CHIP CAP.	0.047uF	25V	B	GRM188B11E473KA01D	K22144811		1-	A	D1
C 3136	CHIP CAP.	0.047uF	25V	B	GRM188B11E473KA01D	K22144811		1-	A	E2
C 3137	CHIP CAP.	0.047uF	25V	B	GRM188B11E473KA01D	K22144811		1-	A	D2
C 3169	CHIP CAP.	100pF	50V	CH	GRM1882C1H101JA01D	K22174235		1-	A	H1
C 3170	CHIP CAP.	100pF	50V	CH	GRM1882C1H101JA01D	K22174235		1-	A	H1
C 3171	CHIP CAP.	100pF	50V	CH	GRM1882C1H101JA01D	K22174235		1-	A	H1
C 3172	CHIP CAP.	100pF	50V	CH	GRM1882C1H101JA01D	K22174235		1-	A	H1
C 3190	CHIP CAP.	0.1uF	25V	B	GRM188B11E104KA01D	K22144814		1-	A	H2
C 3192	CHIP TA.CAP.	1uF	16V		TEESVA1C105M8R	K78120009		1-	A	D2
C 3193	CHIP CAP.	0.01uF	50V	B	GRM188B11H103KA01D	K22174823		1-	A	D2
C 3194	CHIP CAP.	0.01uF	50V	B	GRM188B11H103KA01D	K22174823		1-	A	D2
C 3195	CHIP CAP.	0.0033uF	50V	B	GRM188B11H332KA01D	K22174831		1-	A	D2
C 3196	CHIP CAP.	0.0047uF	50V	B	GRM188B11H472KA01D	K22174833		1-	A	D2
C 3197	CHIP CAP.	0.0022uF	50V	B	GRM188B11H222KA01D	K22174822		1-	A	D2
C 3198	CHIP CAP.	0.01uF	50V	B	GRM188B11H103KA01D	K22174823		1-	A	D2
C 3241	CHIP CAP.	0.033uF	16V	R	GRM188R11C333KA01D	K22124801		1-	A	D3
C 3242	CHIP CAP.	0.01uF	50V	B	GRM188B11H103KA01D	K22174823		1-	A	D3
C 3243	CHIP CAP.	0.022uF	50V	B	GRM188B11H223KA01D	K22174839		1-	A	D3
C 3244	CHIP CAP.	0.001uF	50V	B	GRM188B11H102KA01D	K22174821		1-	A	D3
C 3245	CHIP CAP.	330pF	50V	B	GRM188B11H331KA01D	K22174803		1-	A	D3
C 3246	CHIP CAP.	0.01uF	50V	B	GRM188B11H103KA01D	K22174823		1-	A	F1
C 3247	CHIP CAP.	1uF	16V	B	GRM21BB11C105KA01L	K22120809		1-	A	H2
C 3248	CHIP CAP.	0.01uF	50V	B	GRM188B11H103KA01D	K22174823		1-	A	H2
C 3249	CHIP CAP.	1uF	16V	B	GRM21BB11C105KA01L	K22120809		1-	A	G2
C 3261	CHIP CAP.	0.01uF	50V	B	GRM188B11H103KA01D	K22174823		2-	A	E3
C 3262	CHIP CAP.	0.01uF	50V	B	GRM188B11H103KA01D	K22174823		2-	A	E3
C 3263	CHIP CAP.	0.01uF	50V	B	GRM188B11H103KA01D	K22174823		2-	A	E3
C 3293	CHIP CAP.	0.001uF	50V	B	GRM188B11H102KA01D	K22174821		1-	A	B3
C 3294	CHIP CAP.	0.1uF	25V	B	GRM188B11E104KA01D	K22144814		1-	A	B3
C 3295	CHIP CAP.	0.001uF	50V	B	GRM188B11H102KA01D	K22174821		1-	A	B3
C 3296	CHIP CAP.	0.001uF	50V	B	GRM188B11H102KA01D	K22174821		1-	A	B3
C 3297	CHIP CAP.	0.1uF	25V	B	GRM188B11E104KA01D	K22144814		1-	A	B3
C 3298	CHIP CAP.	0.1uF	25V	B	GRM188B11E104KA01D	K22144814		1-	A	B3
C 3300	CHIP CAP.	0.001uF	50V	B	GRM188B11H102KA01D	K22174821		1-	A	B3
C 3302	CHIP CAP.	0.001uF	50V	B	GRM188B11H102KA01D	K22174821		1-	A	B3
C 3303	CHIP CAP.	0.1uF	25V	B	GRM188B11E104KA01D	K22144814		1-	A	B3
C 3304	CHIP CAP.	0.1uF	25V	B	GRM188B11E104KA01D	K22144814		1-	A	B3
D 3001	DIODE				RB051L-40TE25	G2070718		1-	A	B2
D 3003	DIODE				BAS316	G2070716		1-	A	B1
D 3004	DIODE				RB751G-40T2R	G2071066		1-	A	G3
D 3005	DIODE				IMN10 T108	G2070078		1-	A	G1
D 3006	DIODE				IMN10 T108	G2070078		1-	A	G1
D 3007	DIODE				IMN10 T108	G2070078		1-	A	G1
D 3008	DIODE				BAS316	G2070716		1-	A	B1
D 3009	DIODE				1SS294(TE85R.F)	G2070058		1-	A	C2
D 3013	DIODE				HZM4.7NB2 TR-E	G2070782		1-	A	F3
D 3014	DIODE				DAP202U T106	G2070160		1-	A	G2
D 3015	DIODE				BAS316	G2070716		1-	A	G1
D 3016	DIODE				BAS316	G2070716		1-	A	G1
D 3017	DIODE				IMN10 T108	G2070078		1-	A	G1
D 3018	DIODE				IMN10 T108	G2070078		1-	A	G1
D 3019	DIODE				IMN10 T108	G2070078		1-	A	G1
D 3020	DIODE				BAS316	G2070716		1-	A	G3

REF	DESCRIPTION	VALUE	V/W	TOL.	MFR'S DESIG	YAESU P/N	VERS.	LOT	SIDE	LAY ADR
F 3001	PROTECTOR				ICP-S2.3TN	G9090144		1-	A	A3
FB3001	FERRITE BEADS				BK1608HS601-T	L9190083		1-	A	E2
J 3001	CONNECTOR				SC25-08WS	P0090627		1-	A	C3
J 3003	CONNECTOR				12FLT-SM2-TB(LF)(SN)	P1091198		1-	A	E2
J 3004	CONNECTOR				1210-062-09P-AAE	P0091571		1-	A	A1
J 3005	CONNECTOR				TCS7705-5120177	P1091244		1-	A	A3
J 3006	CONNECTOR				18FLT-SM2-TB(LF)(SN)(M)	P1091176		1-	A	G2
J 3010	CONNECTOR				IMSA-9639S-45	P1091340		1-	A	H1
J 3011	CONNECTOR				18FLT-SM2-TB(LF)(SN)(M)	P1091176		1-	A	G2
J 3012	CONNECTOR				30FLT-SM2-TB(LF)(SN)(M)	P1091142		1-	A	G3
J 3014	CONNECTOR				30FLT-SM2-TB(LF)(SN)(M)	P1091142		1-	A	D1
J 3015	CONNECTOR				18FLT-SM2-TB(LF)(SN)(M)	P1091176		1-	A	H2
J 3016	CONNECTOR				SB20-06WS	P0090613		1-	A	B3
J 3017	CONNECTOR				30FLT-SM2-TB(LF)(SN)(M)	P1091142		1-	A	E3
J 3018	CONNECTOR				30FLT-SM2-TB(LF)(SN)(M)	P1091142		1-	A	D3
J 3019	CONNECTOR				24FLT-SM2-TB(LF)(SN)(M)	P1091128		1-	A	H2
JP3006	CHIP RES.	0	1/16W	5%	RMC1/16 000JATP	J24185000		2-	A	G1
JP3007	CHIP RES.	0	1/16W	5%	RMC1/16 000JATP	J24185000		2-	A	G1
L 3001	M.RFC	100uH			LLM3225-101J	L1691145		1-	A	A2
L 3002	CHIP COIL	1500uH			A814AY-152K=P3	L1691320		1-	A	C3
L 3003	CHIP COIL	1500uH			A814AY-152K=P3	L1691320		1-	A	C2
L 3004	M.RFC	470uH			CDRH105RNP-471NC-VS	L1691359		1-	A	C2
Q 3001	IC				CD74HC238PWR	G1094275		1-	A	F3
Q 3002	IC				ADM3202ARUZ	G1094022		1-	A	A2
Q 3003	IC				BA033T	G1093776		1-	A	B1
Q 3004	IC				PST3445UR	G1093232		1-	A	B1
Q 3005	IC				KIA7805API	G1093163		1-	A	C1
Q 3006	IC				BA033CC0FP-BZE2	G1094077		1-	A	D1
Q 3007	IC				KIA7805API	G1093163		1-	A	C1
Q 3008	IC				S-35190A-T8T1G	G1094356		1-	A	G3
Q 3009	IC				CD74HC238PWR	G1094275		1-	A	F3
Q 3010	TRANSISTOR				2SA1576A T106 R	G3115768R		1-	A	B1
Q 3011	TRANSISTOR				2SC4081 T106	G3340818		1-	A	B1
Q 3012	IC				NJM2374AE-TE1	G1093808		1-	A	B2
Q 3013	TRANSISTOR				2SB1132 T100 R	G3211327R		1-	A	B2
Q 3014	TRANSISTOR				2SC4081 T106	G3340818		1-	A	B1
Q 3015	TRANSISTOR				2SA1576A T106 R	G3115768R		1-	A	B1
Q 3016	TRANSISTOR				DTC114YUA T106	G3070298		1-	A	E1
Q 3017	TRANSISTOR				UMG2N TR	G3070088		1-	A	F1
Q 3018	TRANSISTOR				DTC114YUA T106	G3070298		1-	A	F1
Q 3019	IC				SN74LVC2G08DCTR	G1094341		1-	A	E2
Q 3020	IC				BU2152FS(TAPE)	G1093942		1-	A	H3
Q 3021	IC				SN74LVC1G66DCKR	G1094046		1-	A	E1
Q 3022	TRANSISTOR				DTC114YUA T106	G3070298		1-	A	E1
Q 3023	TRANSISTOR				GA4L4K-T1-A/JM	G3070443		1-	A	E2
Q 3024	TRANSISTOR				2SB624-T2B BV3	G3206247C		1-	A	F1
Q 3025	TRANSISTOR				2SB624-T2B BV3	G3206247C		1-	A	F1
Q 3026	TRANSISTOR				2SB624-T2B BV3	G3206247C		1-	A	F1
Q 3028	IC				BU4052BCFV-BZE2	G1094196		1-	A	E3
Q 3029	IC				BU4052BCFV-BZE2	G1094196		1-	A	D3
Q 3030	IC				MB85RS256APNF-G-JNERE1	G1094985		1-	A	F3
Q 3031	IC				R5F61663N50FPV	G1094412		1-	A	F2
Q 3032	TRANSISTOR				DTC114EUA T106	G3070084		1-	A	G2
Q 3033	IC				CD74HC238PWR	G1094275		1-	A	G1
Q 3034	IC				CD74HC238PWR	G1094275		1-	A	F1
Q 3035	IC				CD74HC238PWR	G1094275		1-	A	F3
Q 3036	IC				CD74HC238PWR	G1094275		1-	A	F3
Q 3037	TRANSISTOR				DTC114YUA T106	G3070298		1-	A	D3
Q 3038	IC				SN74LVC04APWR	G1094177		1-	A	F3
Q 3039	IC				BU4069UBFV-BZE2	G1093601		1-	A	F3
Q 3040	IC				BU2505FV-E2	G1093714		1-	A	D1
Q 3041	IC				SN74HCT244PWR	G1094091		1-	A	G1
Q 3042	IC				BU4053BCFV-BZE2	G1093422		1-	A	D2
Q 3043	IC				TC7SH08FU(TE85L.JF)	G1094736		1-	A	E1
Q 3059	IC				SN74LVC3G17DCTR	G1094419		1-	A	D2
Q 3060	IC				SN74LVC3G17DCTR	G1094419		1-	A	F1
Q 3061	IC				SN74LVC3G17DCTR	G1094419		1-	A	D1
Q 3063	IC				LM2902PWR	G1094009		1-	A	D2
Q 3064	IC				LM2904PWR	G1094010		1-	A	H2
R 3001	CHIP RES.	0	1/16W	5%	RMC1/16 000JATP	J24185000		1-	A	B2
R 3002	CHIP RES.	0	1/16W	5%	RMC1/16 000JATP	J24185000		1-	A	B2
R 3003	CHIP RES.	0	1/16W	5%	RMC1/16 000JATP	J24185000		1-	A	A2
R 3004	CHIP RES.	0	1/16W	5%	RMC1/16 000JATP	J24185000		1-	A	A2

REF	DESCRIPTION	VALUE	V/W	TOL.	MFR'S DESIG	YAESU P/N	VERS.	LOT	SIDE	LAY ADR
R 3005	CHIP RES.	100	1/16W	5%	RMC1/16 101JATP	J24185101		1-	A	A2
R 3006	CHIP RES.	100	1/16W	5%	RMC1/16 101JATP	J24185101		1-	A	A2
R 3007	CHIP RES.	10	1/16W	5%	RMC1/16 100JATP	J24185100		1-	A	A3
R 3008	CHIP RES.	100	1/16W	5%	RMC1/16 101JATP	J24185101		1-	A	A2
R 3009	CHIP RES.	100	1/16W	5%	RMC1/16 101JATP	J24185101		1-	A	A3
R 3010	CHIP RES.	10	1/16W	5%	RMC1/16 100JATP	J24185100		1-	A	A3
R 3011	CHIP RES.	10	1/16W	5%	RMC1/16 100JATP	J24185100		1-	A	A3
R 3012	CHIP RES.	10	1/16W	5%	RMC1/16 100JATP	J24185100		1-	A	A3
R 3013	CHIP RES.	10k	1/16W	5%	RMC1/16 103JATP	J24185103		1-	A	E1
R 3014	CHIP RES.	4.7k	1/16W	5%	RMC1/16 472JATP	J24185472		1-	A	E1
R 3015	CHIP RES.	47k	1/16W	5%	RMC1/16 473JATP	J24185473		1-	A	E1
R 3016	CHIP RES.	0	1/16W	5%	RMC1/16 000JATP	J24185000		1-	A	E2
R 3017	CHIP RES.	0	1/16W	5%	RMC1/16 000JATP	J24185000		1-	A	F2
R 3018	CHIP RES.	47k	1/16W	5%	RMC1/16 473JATP	J24185473		1-	A	E1
R 3019	CHIP RES.	10k	1/16W	5%	RMC1/16 103JATP	J24185103		1-	A	G3
R 3020	CHIP RES.	10k	1/16W	5%	RMC1/16 103JATP	J24185103		1-	A	G3
R 3021	CHIP RES.	2.2	1W	5%	RMC1 2R2JTE	J24305229		1-	A	C1
R 3022	CHIP RES.	2.2	1W	5%	RMC1 2R2JTE	J24305229		1-	A	C2
R 3023	CHIP RES.	3.9	1W	5%	RMC1 3R9JTE	J24305399		1-	A	B2
R 3024	CHIP RES.	10k	1/16W	1%	RMC1/16 103FTP	J24183103		1-	A	B1
R 3025	CHIP RES.	10k	1/16W	1%	RMC1/16 103FTP	J24183103		1-	A	B1
R 3026	CHIP RES.	3.9	1W	5%	RMC1 3R9JTE	J24305399		1-	A	B2
R 3028	CHIP RES.	4.7k	1/16W	5%	RMC1/16 472JATP	J24185472		1-	A	B1
R 3030	CHIP RES.	10k	1/16W	5%	RMC1/16 103JATP	J24185103		1-	A	B1
R 3031	CHIP RES.	1k	1/16W	5%	RMC1/16 102JATP	J24185102		1-	A	G3
R 3032	CHIP RES.	47k	1/16W	5%	RMC1/16 473JATP	J24185473		1-	A	B1
R 3033	CHIP RES.	47k	1/16W	5%	RMC1/16 473JATP	J24185473		1-	A	B1
R 3034	CHIP RES.	10k	1/16W	5%	RMC1/16 103JATP	J24185103		1-	A	B1
R 3035	CHIP RES.	100k	1/16W	5%	RMC1/16 104JATP	J24185104		1-	A	B1
R 3036	CHIP RES.	1	1/10W	5%	RMC1/10T 1R0J	J24205010		1-	A	B2
R 3037	CHIP RES.	4.7k	1/16W	5%	RMC1/16 472JATP	J24185472		1-	A	E1
R 3038	CHIP RES.	1	1/10W	5%	RMC1/10T 1R0J	J24205010		1-	A	B2
R 3039	CHIP RES.	1k	1/16W	5%	RMC1/16 102JATP	J24185102		1-	A	C2
R 3040	CHIP RES.	1	1/10W	5%	RMC1/10T 1R0J	J24205010		1-	A	B2
R 3042	CHIP RES.	100k	1/16W	5%	RMC1/16 104JATP	J24185104		1-	A	B1
R 3043	CHIP RES.	1	1/10W	5%	RMC1/10T 1R0J	J24205010		1-	A	B2
R 3044	CHIP RES.	4.7k	1/16W	5%	RMC1/16 472JATP	J24185472		1-	A	E2
R 3045	CHIP RES.	1k	1/16W	5%	RMC1/16 102JATP	J24185102		1-	A	B2
R 3046	CHIP RES.	330k	1/16W	5%	RMC1/16 334JATP	J24185334		1-	A	B2
R 3047	CHIP RES.	4.7k	1/16W	5%	RMC1/16 472JATP	J24185472		1-	A	E2
R 3048	CHIP RES.	4.7k	1/16W	5%	RMC1/16 472JATP	J24185472		1-	A	E2
R 3049	CHIP RES.	100k	1/16W	5%	RMC1/16 104JATP	J24185104		1-	A	B1
R 3050	CHIP RES.	47k	1/16W	5%	RMC1/16 473JATP	J24185473		1-	A	B1
R 3051	CHIP RES.	47k	1/16W	5%	RMC1/16 473JATP	J24185473		1-	A	B1
R 3052	CHIP RES.	6.2k	1/16W	1%	RMC1/16 622FTP	J24183622		1-	A	B2
R 3053	CHIP RES.	4.7k	1/16W	5%	RMC1/16 472JATP	J24185472		1-	A	E1
R 3054	CHIP RES.	10k	1/16W	5%	RMC1/16 103JATP	J24185103		1-	A	B1
R 3055	CHIP RES.	4.7k	1/16W	5%	RMC1/16 472JATP	J24185472		1-	A	E2
R 3056	CHIP RES.	10k	1/16W	5%	RMC1/16 103JATP	J24185103		1-	A	B2
R 3057	CHIP RES.	1k	1/16W	1%	RMC1/16 102FTP	J24183102		1-	A	B2
R 3058	CHIP RES.	4.7k	1/16W	5%	RMC1/16 472JATP	J24185472		1-	A	E2
R 3059	CHIP RES.	4.7k	1/16W	5%	RMC1/16 472JATP	J24185472		1-	A	B2
R 3060	CHIP RES.	470	1/16W	5%	RMC1/16 471JATP	J24185471		1-	A	H2
R 3061	CHIP RES.	470	1/16W	5%	RMC1/16 471JATP	J24185471		1-	A	H2
R 3062	CHIP RES.	100k	1/16W	5%	RMC1/16 104JATP	J24185104		1-	A	F1
R 3063	CHIP RES.	1k	1/16W	5%	RMC1/16 102JATP	J24185102		1-	A	F1
R 3064	CHIP RES.	1k	1/16W	5%	RMC1/16 102JATP	J24185102		1-	A	F1
R 3065	CHIP RES.	1k	1/16W	5%	RMC1/16 102JATP	J24185102		1-	A	F1
R 3066	CHIP RES.	470	1/16W	5%	RMC1/16 471JATP	J24185471		1-	A	H3
R 3068	CHIP RES.	0	1/16W	5%	RMC1/16 000JATP	J24185000		1-	A	E2
R 3069	CHIP RES.	10k	1/16W	5%	RMC1/16 103JATP	J24185103		1-	A	E2
R 3070	CHIP RES.	10k	1/16W	5%	RMC1/16 103JATP	J24185103		1-	A	E2
R 3071	CHIP RES.	10k	1/16W	5%	RMC1/16 103JATP	J24185103		1-	A	E2
R 3072	CHIP RES.	10k	1/16W	5%	RMC1/16 103JATP	J24185103		1-	A	E2
R 3073	CHIP RES.	10k	1/16W	5%	RMC1/16 103JATP	J24185103		1-	A	E2
R 3074	CHIP RES.	10k	1/16W	5%	RMC1/16 103JATP	J24185103		1-	A	F2
R 3075	CHIP RES.	47k	1/16W	5%	RMC1/16 473JATP	J24185473		1-	A	F2
R 3076	CHIP RES.	10	1/16W	5%	RMC1/16 100JATP	J24185100		1-	A	F2
R 3077	CHIP RES.	4.7k	1/16W	5%	RMC1/16 472JATP	J24185472		1-	A	F3
R 3078	CHIP RES.	220	1/16W	5%	RMC1/16 221JATP	J24185221		1-	A	E2
R 3080	CHIP RES.	1M	1/16W	5%	RMC1/16 105JATP	J24185105		1-	A	E2
R 3081	CHIP RES.	4.7k	1/16W	5%	RMC1/16 472JATP	J24185472		1-	A	F3
R 3082	CHIP RES.	47k	1/16W	5%	RMC1/16 473JATP	J24185473		1-	A	E1

REF	DESCRIPTION	VALUE	V/W	TOL.	MFR'S DESIG	YAESU P/N	VERS.	LOT	SIDE	LAY ADR
R 3083	CHIP RES.	1M	1/16W	5%	RMC1/16 105JATP	J24185105		1-	A	E2
R 3084	CHIP RES.	4.7k	1/16W	5%	RMC1/16 472JATP	J24185472		1-	A	F3
R 3086	CHIP RES.	1M	1/16W	5%	RMC1/16 105JATP	J24185105		1-	A	E2
R 3087	CHIP RES.	10k	1/16W	5%	RMC1/16 103JATP	J24185103		1-	A	G2
R 3088	CHIP RES.	10k	1/16W	5%	RMC1/16 103JATP	J24185103		1-	A	G2
R 3089	CHIP RES.	47k	1/16W	5%	RMC1/16 473JATP	J24185473		1-	A	F3
R 3090	CHIP RES.	1M	1/16W	5%	RMC1/16 105JATP	J24185105		1-	A	E2
R 3091	CHIP RES.	4.7k	1/10W	0.5%	RR1220P-472-D-T5	J24209187		1-	A	D3
R 3092	CHIP RES.	100k	1/16W	5%	RMC1/16 104JATP	J24185104		1-	A	H2
R 3093	CHIP RES.	10k	1/16W	5%	RMC1/16 103JATP	J24185103		1-	A	E2
R 3094	CHIP RES.	0	1/16W	5%	RMC1/16 000JATP	J24185000		1-	A	E2
R 3095	CHIP RES.	4.7k	1/16W	5%	RMC1/16 472JATP	J24185472		1-	A	F3
R 3096	CHIP RES.	0	1/16W	5%	RMC1/16 000JATP	J24185000		1-	A	E2
R 3097	CHIP RES.	4.7k	1/16W	5%	RMC1/16 472JATP	J24185472		1-	A	F3
R 3098	CHIP RES.	4.7k	1/16W	5%	RMC1/16 472JATP	J24185472		1-	A	F3
R 3099	CHIP RES.	0	1/16W	5%	RMC1/16 000JATP	J24185000		1-	A	E1
R 3100	CHIP RES.	100k	1/16W	5%	RMC1/16 104JATP	J24185104		1-	A	F1
R 3101	CHIP RES.	100k	1/16W	5%	RMC1/16 104JATP	J24185104		1-	A	F1
R 3102	CHIP RES.	100k	1/16W	5%	RMC1/16 104JATP	J24185104		1-	A	F1
R 3105	CHIP RES.	100k	1/16W	5%	RMC1/16 104JATP	J24185104		1-	A	F1
R 3106	CHIP RES.	100k	1/16W	5%	RMC1/16 104JATP	J24185104		1-	A	F1
R 3110	CHIP RES.	10k	1/16W	5%	RMC1/16 103JATP	J24185103		1-	A	E1
R 3113	CHIP RES.	100k	1/16W	5%	RMC1/16 104JATP	J24185104		1-	A	E2
R 3114	CHIP RES.	100	1/16W	5%	RMC1/16 101JATP	J24185101		1-	A	F3
R 3115	CHIP RES.	100	1/16W	5%	RMC1/16 101JATP	J24185101		1-	A	F3
R 3116	CHIP RES.	0	1/16W	5%	RMC1/16 000JATP	J24185000		1-	A	F3
R 3117	CHIP RES.	0	1/16W	5%	RMC1/16 000JATP	J24185000		1-	A	F3
R 3118	CHIP RES.	0	1/16W	5%	RMC1/16 000JATP	J24185000		1-	A	F3
R 3119	CHIP RES.	0	1/16W	5%	RMC1/16 000JATP	J24185000		1-	A	F3
R 3120	CHIP RES.	0	1/16W	5%	RMC1/16 000JATP	J24185000		1-	A	F3
R 3121	CHIP RES.	0	1/16W	5%	RMC1/16 000JATP	J24185000		1-	A	E3
R 3124	CHIP RES.	100k	1/16W	5%	RMC1/16 104JATP	J24185104		1-	A	E2
R 3125	CHIP RES.	100k	1/16W	5%	RMC1/16 104JATP	J24185104		1-	A	F2
R 3126	CHIP RES.	100k	1/16W	5%	RMC1/16 104JATP	J24185104		1-	A	E2
R 3127	CHIP RES.	100k	1/16W	5%	RMC1/16 104JATP	J24185104		1-	A	F2
R 3129	CHIP RES.	100k	1/16W	5%	RMC1/16 104JATP	J24185104		1-	A	F1
R 3130	CHIP RES.	1k	1/16W	5%	RMC1/16 102JATP	J24185102		1-	A	D2
R 3131	CHIP RES.	1k	1/16W	5%	RMC1/16 102JATP	J24185102		1-	A	D2
R 3132	CHIP RES.	1k	1/16W	5%	RMC1/16 102JATP	J24185102		1-	A	D2
R 3133	CHIP RES.	4.7k	1/16W	5%	RMC1/16 472JATP	J24185472		1-	A	E2
R 3134	CHIP RES.	10k	1/16W	5%	RMC1/16 103JATP	J24185103		1-	A	D2
R 3135	CHIP RES.	10k	1/16W	5%	RMC1/16 103JATP	J24185103		1-	A	E2
R 3136	CHIP RES.	10k	1/16W	5%	RMC1/16 103JATP	J24185103		1-	A	D2
R 3137	CHIP RES.	100k	1/16W	5%	RMC1/16 104JATP	J24185104		1-	A	F1
R 3139	CHIP RES.	0	1/16W	5%	RMC1/16 000JATP	J24185000		1-	A	E2
R 3140	CHIP RES.	4.7k	1/16W	5%	RMC1/16 472JATP	J24185472		1-	A	F1
R 3141	CHIP RES.	10k	1/16W	5%	RMC1/16 103JATP	J24185103		1-	A	F2
R 3142	CHIP RES.	100k	1/16W	5%	RMC1/16 104JATP	J24185104		1-	A	F2
R 3144	CHIP RES.	4.7k	1/16W	5%	RMC1/16 472JATP	J24185472		1-	A	F1
R 3145	CHIP RES.	10k	1/16W	5%	RMC1/16 103JATP	J24185103		1-	A	F1
R 3146	CHIP RES.	10k	1/16W	5%	RMC1/16 103JATP	J24185103		1-	A	F2
R 3147	CHIP RES.	10k	1/16W	5%	RMC1/16 103JATP	J24185103		1-	A	F1
R 3148	CHIP RES.	100k	1/16W	5%	RMC1/16 104JATP	J24185104		1-	A	F1
R 3149	CHIP RES.	47k	1/16W	5%	RMC1/16 473JATP	J24185473		1-	A	D3
R 3150	CHIP RES.	1k	1/16W	5%	RMC1/16 102JATP	J24185102		1-	A	F1
R 3151	CHIP RES.	1k	1/16W	5%	RMC1/16 102JATP	J24185102		1-	A	E1
R 3152	CHIP RES.	1k	1/16W	5%	RMC1/16 102JATP	J24185102		1-	A	E1
R 3153	CHIP RES.	4.7k	1/16W	5%	RMC1/16 472JATP	J24185472		1-	A	F1
R 3154	CHIP RES.	10k	1/16W	5%	RMC1/16 103JATP	J24185103		1-	A	F1
R 3155	CHIP RES.	10k	1/16W	5%	RMC1/16 103JATP	J24185103		1-	A	E1
R 3156	CHIP RES.	10k	1/16W	5%	RMC1/16 103JATP	J24185103		1-	A	F1
R 3157	CHIP RES.	0	1/16W	5%	RMC1/16 000JATP	J24185000		1-	A	D1
R 3158	CHIP RES.	0	1/16W	5%	RMC1/16 000JATP	J24185000		1-	A	G2
R 3159	CHIP RES.	0	1/16W	5%	RMC1/16 000JATP	J24185000		1-	A	G2
R 3160	CHIP RES.	0	1/16W	5%	RMC1/16 000JATP	J24185000		1-	A	F3
R 3161	CHIP RES.	0	1/16W	5%	RMC1/16 000JATP	J24185000		1-	A	G3
R 3162	CHIP RES.	1k	1/16W	5%	RMC1/16 102JATP	J24185102		1-	A	D1
R 3163	CHIP RES.	1k	1/16W	5%	RMC1/16 102JATP	J24185102		1-	A	D2
R 3164	CHIP RES.	1k	1/16W	5%	RMC1/16 102JATP	J24185102		1-	A	D2
R 3165	CHIP RES.	10k	1/16W	5%	RMC1/16 103JATP	J24185103		1-	A	D1
R 3166	CHIP RES.	10k	1/16W	5%	RMC1/16 103JATP	J24185103		1-	A	D2
R 3167	CHIP RES.	10k	1/16W	5%	RMC1/16 103JATP	J24185103		1-	A	D1
R 3168	CHIP RES.	100k	1/16W	5%	RMC1/16 104JATP	J24185104		1-	A	E1

REF	DESCRIPTION	VALUE	V/W	TOL.	MFR'S DESIG	YAESU P/N	VERS.	LOT	SIDE	LAY ADR
R 3169	CHIP RES.	100k	1/16W	5%	RMC1/16 104JATP	J24185104		1-	A	E1
R 3170	CHIP RES.	10k	1/16W	5%	RMC1/16 103JATP	J24185103		1-	A	G3
R 3171	CHIP RES.	3.3k	1/16W	5%	RMC1/16 332JATP	J24185332		1-	A	D2
R 3173	CHIP RES.	4.7k	1/16W	5%	RMC1/16 472JATP	J24185472		1-	A	D3
R 3176	CHIP RES.	4.7k	1/16W	5%	RMC1/16 472JATP	J24185472		1-	A	E3
R 3177	CHIP RES.	10k	1/16W	5%	RMC1/16 103JATP	J24185103		1-	A	D2
R 3178	CHIP RES.	4.7k	1/16W	5%	RMC1/16 472JATP	J24185472		1-	A	D2
R 3179	CHIP RES.	39k	1/16W	5%	RMC1/16 393JATP	J24185393		1-	A	D2
R 3180	CHIP RES.	39k	1/16W	5%	RMC1/16 393JATP	J24185393		1-	A	D2
R 3181	CHIP RES.	39k	1/16W	5%	RMC1/16 393JATP	J24185393		1-	A	D2
R 3182	CHIP RES.	39k	1/16W	5%	RMC1/16 393JATP	J24185393		1-	A	D2
R 3183	CHIP RES.	47k	1/16W	5%	RMC1/16 473JATP	J24185473		1-	A	H1
R 3184	CHIP RES.	47k	1/16W	5%	RMC1/16 473JATP	J24185473		1-	A	H1
R 3185	CHIP RES.	47k	1/16W	5%	RMC1/16 473JATP	J24185473		1-	A	H1
R 3186	CHIP RES.	47k	1/16W	5%	RMC1/16 473JATP	J24185473		1-	A	H1
R 3187	CHIP RES.	47k	1/16W	5%	RMC1/16 473JATP	J24185473		1-	A	H1
R 3188	CHIP RES.	47k	1/16W	5%	RMC1/16 473JATP	J24185473		1-	A	H1
R 3189	CHIP RES.	47k	1/16W	5%	RMC1/16 473JATP	J24185473		1-	A	H1
R 3190	CHIP RES.	47k	1/16W	5%	RMC1/16 473JATP	J24185473		1-	A	G1
R 3191	CHIP RES.	10k	1/16W	5%	RMC1/16 103JATP	J24185103		1-	A	D3
R 3192	CHIP RES.	10k	1/16W	5%	RMC1/16 103JATP	J24185103		1-	A	D2
R 3193	CHIP RES.	27k	1/16W	5%	RMC1/16 273JATP	J24185273		1-	A	D3
R 3194	CHIP RES.	27k	1/16W	5%	RMC1/16 273JATP	J24185273		1-	A	D3
R 3195	CHIP RES.	27k	1/16W	5%	RMC1/16 273JATP	J24185273		1-	A	D3
R 3196	CHIP RES.	27k	1/16W	5%	RMC1/16 273JATP	J24185273		1-	A	D3
R 3197	CHIP RES.	0	1/16W	5%	RMC1/16 000JATP	J24185000		1-	A	H3
R 3198	CHIP RES.	0	1/16W	5%	RMC1/16 000JATP	J24185000		1-	A	H3
R 3199	CHIP RES.	0	1/16W	5%	RMC1/16 000JATP	J24185000		1-	A	H3
R 3200	CHIP RES.	0	1/16W	5%	RMC1/16 000JATP	J24185000		1-	A	H3
R 3201	CHIP RES.	10k	1/16W	5%	RMC1/16 103JATP	J24185103		1-	A	D3
R 3202	CHIP RES.	10k	1/16W	5%	RMC1/16 103JATP	J24185103		1-	A	D2
R 3203	CHIP RES.	10k	1/16W	5%	RMC1/16 103JATP	J24185103		1-	A	D2
R 3204	CHIP RES.	10k	1/16W	5%	RMC1/16 103JATP	J24185103		1-	A	H2
R 3205	CHIP RES.	10k	1/16W	5%	RMC1/16 103JATP	J24185103		1-	A	G2
R 3206	CHIP RES.	100	1/16W	5%	RMC1/16 101JATP	J24185101		1-	A	E1
R 3207	CHIP RES.	100	1/16W	5%	RMC1/16 101JATP	J24185101		1-	A	E1
R 3208	CHIP RES.	10k	1/16W	5%	RMC1/16 103JATP	J24185103		1-	A	H2
R 3209	CHIP RES.	10k	1/16W	5%	RMC1/16 103JATP	J24185103		1-	A	H2
R 3210	CHIP RES.	0	1/16W	5%	RMC1/16 000JATP	J24185000		1-	A	H2
R 3211	CHIP RES.	100	1/16W	5%	RMC1/16 101JATP	J24185101		1-	A	H2
R 3212	CHIP RES.	100	1/16W	5%	RMC1/16 101JATP	J24185101		1-	A	H2
R 3213	CHIP RES.	47k	1/16W	5%	RMC1/16 473JATP	J24185473		1-	A	G2
RB3001	BLOCK RES.				RAC104D332JCTH	J42900041		1-	A	E2
RB3002	BLOCK RES.				RAC104D103JCTP	J42900024		1-	A	F2
RB3003	BLOCK RES.				RAC104D103JCTP	J42900024		1-	A	F2
RB3004	BLOCK RES.				RAC104D103JCTP	J42900024		1-	A	F2
RB3005	BLOCK RES.				RAC104D103JCTP	J42900024		1-	A	E1
RB3006	BLOCK RES.				RAC104D103JCTP	J42900024		1-	A	F2
RB3007	BLOCK RES.				RAC104D103JCTP	J42900024		1-	A	F1
S 3001	SLIDE SWITCH				SSSS820201	N6090107		1-	A	E1
S 3002	SLIDE SWITCH				SSSS222700	N6090057		1-	A	A1
TC3001	TRIMMER CAP.	6pF			TZC3Z060A110R00	K91000281		1-	A	G3
TP3002	CHECK TERMINAL				RCTCTE	Q5000103		1-	A	G3
	XTAL SSP-T7-F	32.768kHz			32.768KHZ	H0103327		1-	A	G3
	XTAL SMD-49	11.1MHz			11.10MHZ	H0103321		1-	A	E1

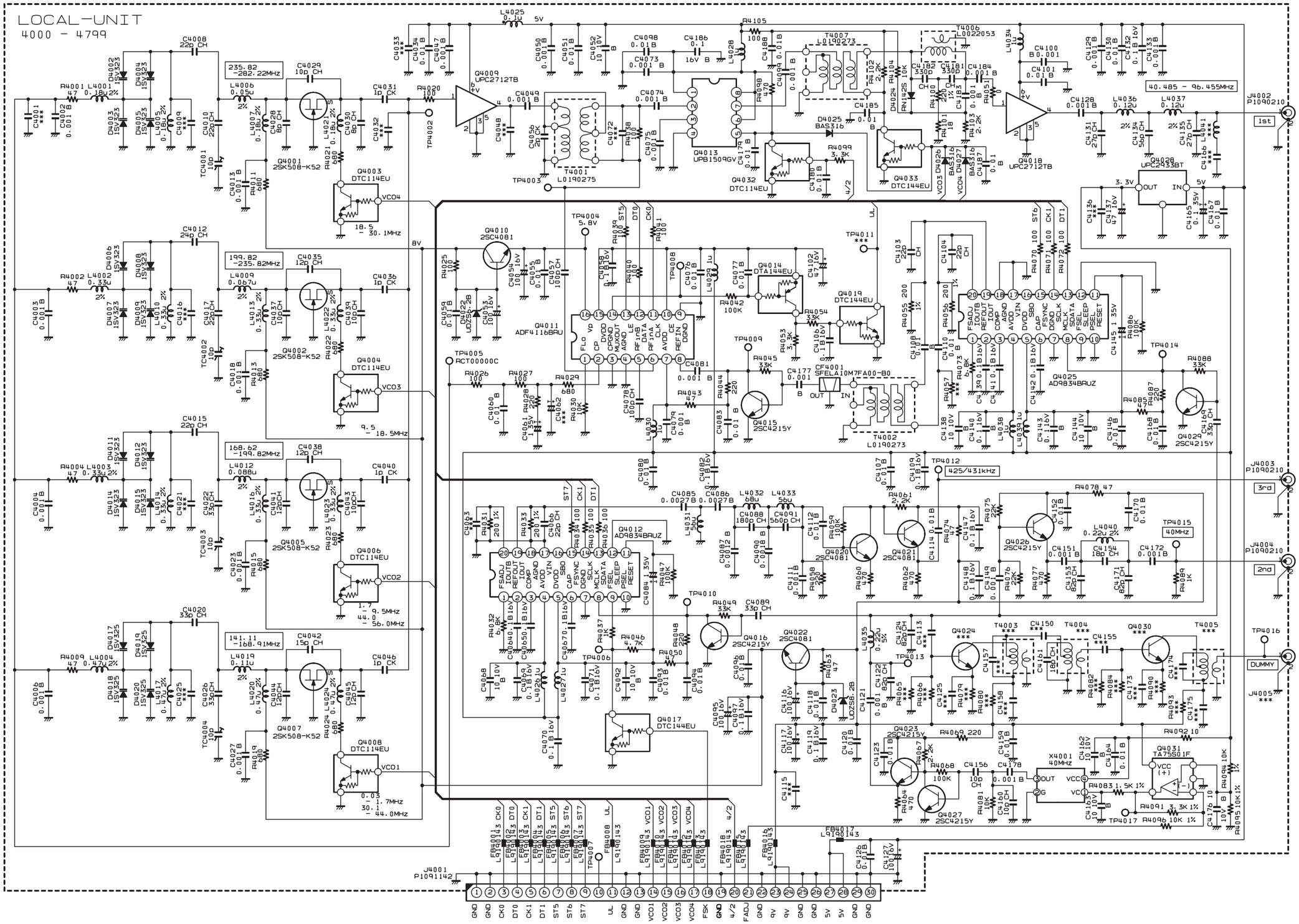
LOCAL—UNIT
4000 - 4799
235.82 -282.22MHz
199.82 -235.82MHz
168.62 -199.82MHz
141.11 -168.91MHz
40.485 - 96.455MHz
425/431kHz
Q4009 UPC2712TB
Q4010 2SC4081
Q4011 ADF4116BRU
Q4012 AD9834BRUZ
Q4013 UPB1509GV
Q4014 DTA144EU
Q4015 2SC4215Y
Q4016 2SC4215Y
Q4017 DTC144EU
Q4018 UPC2712TB
Q4019 DTC144EU
Q4020 2SC4081
Q4021 2SC4081
Q4022 2SB1
Q4023 2SC4215Y
Q4024 ***
Q4025 AD9834BRUZ
Q4026 2SC4215Y
Q4027 2SC4215Y
Q4028 UPC2433BT
Q4029 2SC4215Y
Q4030 ***
Q4031 TA75S01F
Q4032 DTC114EU
Q4033 DTC144EU
Q4001 2SK508-K52
Q4002 2SK508-K52
Q4003 DTC114EU
Q4004 DTC114EU
Q4005 2SK508-K52
Q4006 DTC114EU
Q4007 2SK508-K52
Q4008 DTC114EU
T4001 L0190275
T4002 L0190273
T4003 ***
T4004 ***
T4005 ***
T4006 L0220S3
T4007 L0190273
FH001 SFELA10M7FA00-B0
X4001 40MHz
J4001 P1091142
J4002 P1090210
J4003 P1090210
J4004 P1090210
J4005 ***
1st
2nd
3rd
DUMMY
GND GND CK0 DT0 CK1 DT1 ST5 ST6 ST7 UL GND GND VCO1 VCO2 VCO3 VCO4 FSK GND 4/2 FADJ GND 9V 9V GND GND 5V 5V GND GND

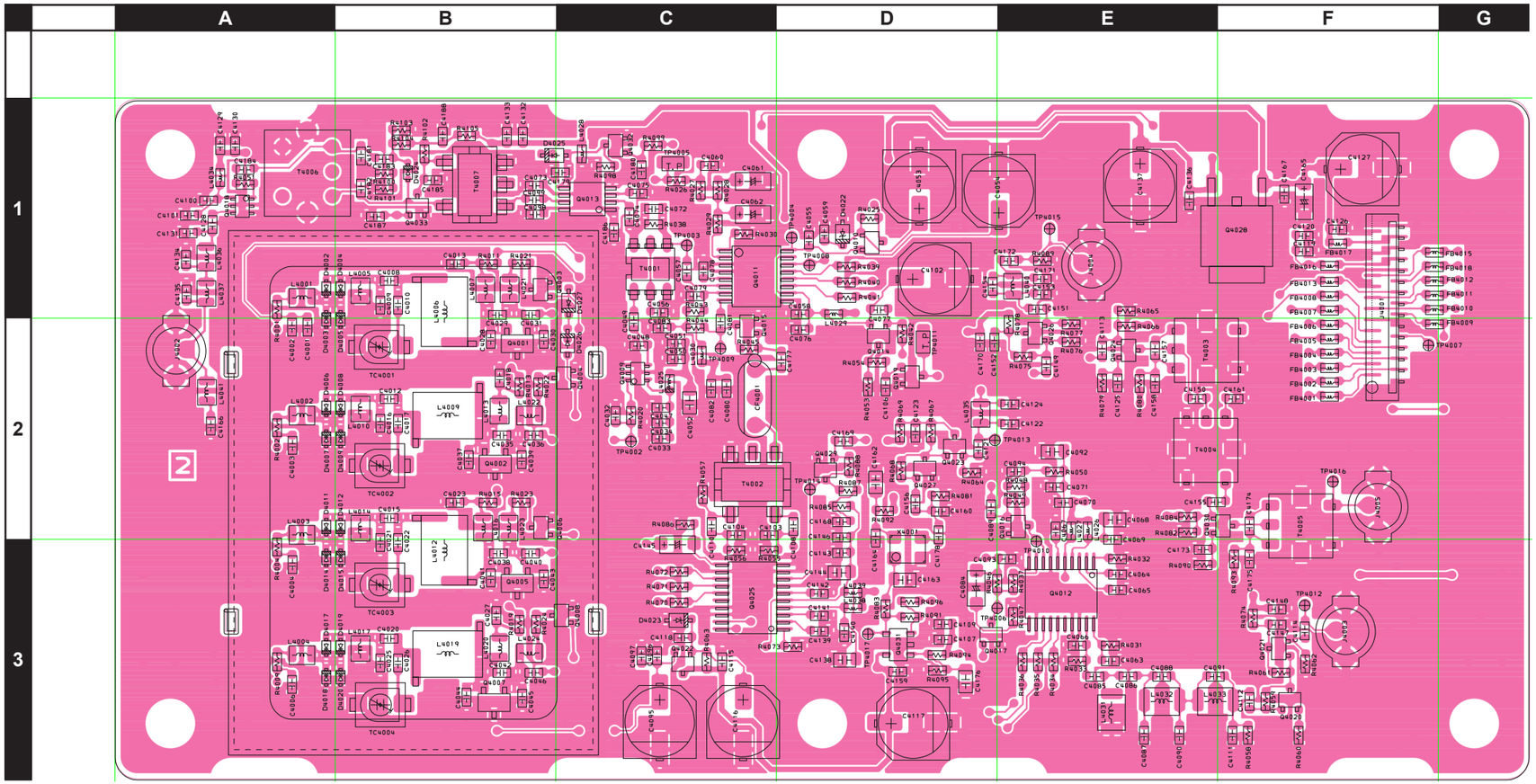
A
B
C
D
E
F
G
1
2
3

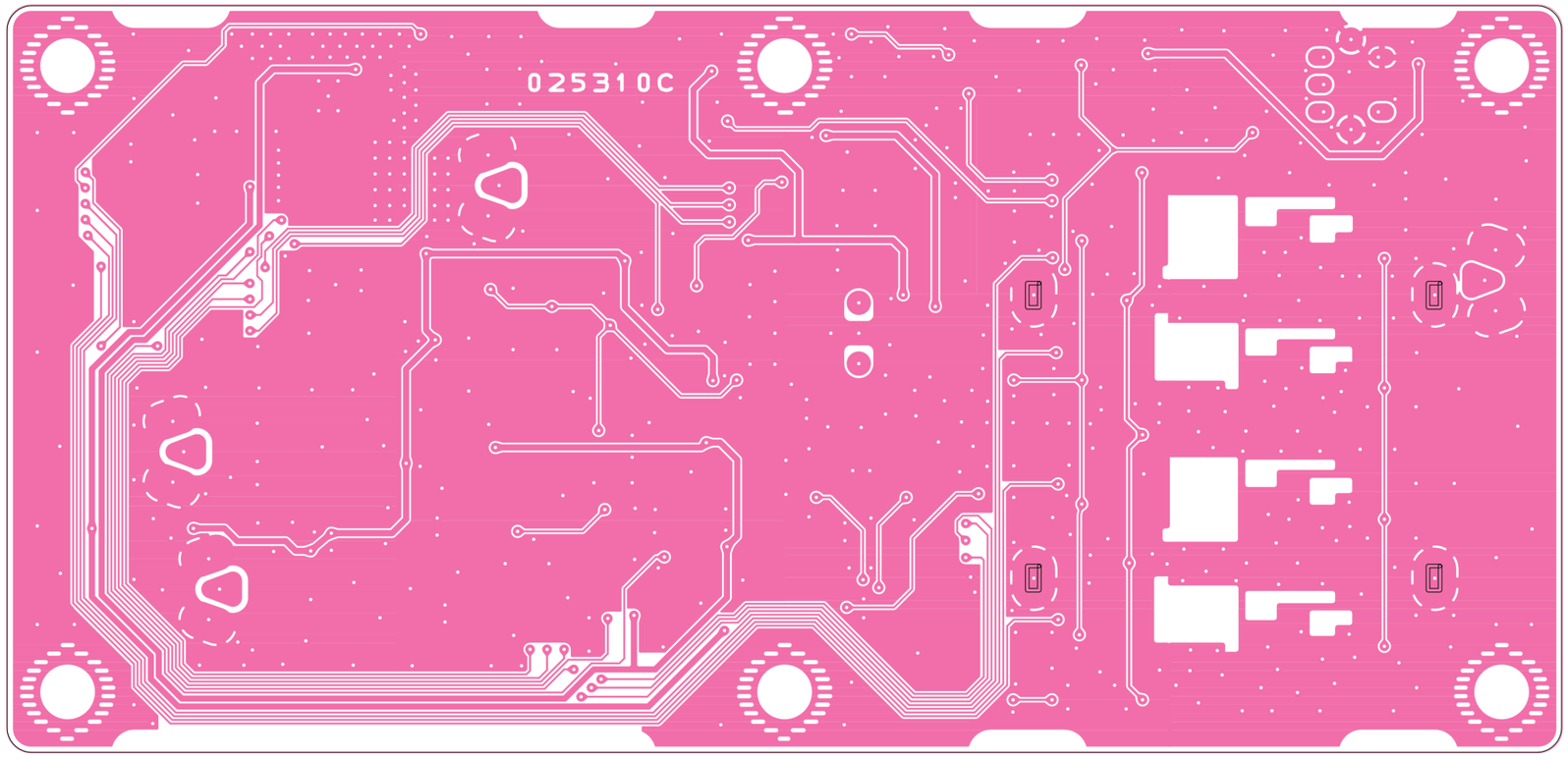
025310C

REF	DESCRIPTION	VALUE	V/W	TOL.	MFR'S DESIG	YAESU P/N	VERS.	LOT	SIDE	LAY ADR
	PCB with Components					CS2182701				
C 4002	CHIP CAP.	0.001uF	50V	B	GRM188B11H102KA01D	K22174821		1-	A	A2
C 4003	CHIP CAP.	0.001uF	50V	B	GRM188B11H102KA01D	K22174821		1-	A	A2
C 4004	CHIP CAP.	0.001uF	50V	B	GRM188B11H102KA01D	K22174821		1-	A	A3
C 4006	CHIP CAP.	0.001uF	50V	B	GRM188B11H102KA01D	K22174821		1-	A	A3
C 4008	CHIP CAP.	22pF	50V	CH	GRM1882C1H220JA01D	K22174219		1-	A	B1
C 4010	CHIP CAP.	22pF	50V	CH	GRM1882C1H220JA01D	K22174219		1-	A	B1
C 4012	CHIP CAP.	24pF	50V	CH	GRM1882C1H240JZ01D	K22174220		1-	A	B2
C 4013	CHIP CAP.	0.001uF	50V	B	GRM188B11H102KA01D	K22174821		1-	A	B1
C 4015	CHIP CAP.	22pF	50V	CH	GRM1882C1H220JA01D	K22174219		1-	A	B2
C 4017	CHIP CAP.	22pF	50V	CH	GRM1882C1H220JA01D	K22174219		1-	A	B2
C 4018	CHIP CAP.	0.001uF	50V	B	GRM188B11H102KA01D	K22174821		1-	A	B2
C 4020	CHIP CAP.	33pF	50V	CH	GRM1882C1H330JA01D	K22174223		1-	A	B3
C 4022	CHIP CAP.	33pF	50V	CH	GRM1882C1H330JA01D	K22174223		1-	A	B3
C 4023	CHIP CAP.	0.001uF	50V	B	GRM188B11H102KA01D	K22174821		1-	A	B2
C 4026	CHIP CAP.	33pF	50V	CH	GRM1882C1H330JA01D	K22174223		1-	A	B3
C 4027	CHIP CAP.	0.001uF	50V	B	GRM188B11H102KA01D	K22174821		1-	A	B3
C 4028	CHIP CAP.	8pF	50V	CH	GRM1882C1H8R0DA01D	K22174209		1-	A	B2
C 4029	CHIP CAP.	10pF	50V	CH	GRM1882C1H100JA01D	K22174211		1-	A	B1
C 4030	CHIP CAP.	8pF	50V	CH	GRM1882C1H8R0DA01D	K22174209		1-	A	B2
C 4031	CHIP CAP.	1pF	50V	CK	GRM1884C1H1R0BA01D	K22174267		1-	A	B1
C 4034	CHIP CAP.	0.01uF	50V	B	GRM188B11H103KA01D	K22174823		1-	A	C2
C 4035	CHIP CAP.	12pF	50V	CH	GRM1882C1H120JA01D	K22174213		1-	A	B2
C 4036	CHIP CAP.	1pF	50V	CK	GRM1884C1H1R0CA01D	K22174202		1-	A	B2
C 4037	CHIP CAP.	10pF	50V	CH	GRM1882C1H100JA01D	K22174211		1-	A	B2
C 4038	CHIP CAP.	12pF	50V	CH	GRM1882C1H120JA01D	K22174213		1-	A	B3
C 4039	CHIP CAP.	10pF	50V	CH	GRM1882C1H100JA01D	K22174211		1-	A	B2
C 4040	CHIP CAP.	1pF	50V	CK	GRM1884C1H1R0BA01D	K22174267		1-	A	B3
C 4041	CHIP CAP.	12pF	50V	CH	GRM1882C1H120JA01D	K22174213		1-	A	B3
C 4042	CHIP CAP.	15pF	50V	CH	GRM1882C1H150JA01D	K22174215		1-	A	B3
C 4043	CHIP CAP.	10pF	50V	CH	GRM1882C1H100JA01D	K22174211		1-	A	B3
C 4044	CHIP CAP.	12pF	50V	CH	GRM1882C1H120JA01D	K22174213		1-	A	B3
C 4045	CHIP CAP.	12pF	50V	CH	GRM1882C1H120JA01D	K22174213		1-	A	B3
C 4046	CHIP CAP.	1pF	50V	CK	GRM1884C1H1R0BA01D	K22174267		1-	A	B3
C 4047	CHIP CAP.	0.001uF	50V	B	GRM188B11H102KA01D	K22174821		1-	A	C2
C 4049	CHIP CAP.	0.001uF	50V	B	GRM188B11H102KA01D	K22174821		1-	A	C2
C 4050	CHIP CAP.	0.001uF	50V	B	GRM188B11H102KA01D	K22174821		1-	A	C2
C 4051	CHIP CAP.	0.01uF	50V	B	GRM188B11H103KA01D	K22174823		1-	A	C2
C 4052	CHIP CAP.	10uF	10V	B	GRM21BB31A106KE18L	K22100808		1-	A	C2
C 4053	AL.ELECTRO.CAP.	100uF	16V		EEE1CA101WP	K48120012		1-	A	D1
C 4054	AL.ELECTRO.CAP.	100uF	16V		EEE1CA101WP	K48120012		1-	A	E1
C 4055	CHIP CAP.	0.01uF	50V	B	GRM188B11H103JA01D	K22174824		1-	A	D1
C 4056	CHIP CAP.	2pF	50V	CK	GRM1884C1H2R0CA01D	K22174203		1-	A	C1
C 4057	CHIP CAP.	100pF	50V	CH	GRM1882C1H101JA01D	K22174235		1-	A	C1
C 4058	CHIP CAP.	0.1uF	16V	B	GRM188B11C104KA01D	K22124805		1-	A	D1
C 4059	CHIP CAP.	0.01uF	50V	B	GRM188B11H103KA01D	K22174823		1-	A	D1
C 4060	CHIP CAP.	0.01uF	50V	B	GRM188B11H103KA01D	K22174823		1-	A	C1
C 4061	CHIP TA.CAP.	1uF	35V		TEESVA1V105M8R	K78160032		1-	A	C1
C 4064	CHIP CAP.	0.1uF	16V	B	GRM188B11C104KA01D	K22124805		1-	A	E3
C 4065	CHIP CAP.	0.1uF	16V	B	GRM188B11C104KA01D	K22124805		1-	A	E3
C 4066	CHIP CAP.	22pF	50V	CH	GRM1882C1H220JA01D	K22174219		1-	A	E3
C 4067	CHIP CAP.	0.1uF	16V	B	GRM188B11C104KA01D	K22124805		1-	A	E2
C 4068	CHIP CAP.	10uF	10V	B	GRM21BB31A106KE18L	K22100808		1-	A	E2
C 4069	CHIP CAP.	0.1uF	16V	B	GRM188B11C104KA01D	K22124805		1-	A	E2
C 4070	CHIP CAP.	0.1uF	16V	B	GRM188B11C104KA01D	K22124805		1-	A	E2
C 4071	CHIP CAP.	0.1uF	16V	B	GRM188B11C104KA01D	K22124805		1-	A	E2
C 4073	CHIP CAP.	0.001uF	50V	B	GRM188B11H102KA01D	K22174821		1-	A	B1
C 4074	CHIP CAP.	0.001uF	50V	B	GRM188B11H102KA01D	K22174821		1-	A	C1
C 4075	CHIP CAP.	0.001uF	50V	B	GRM188B11H102KA01D	K22174821		1-	A	C1
C 4076	CHIP CAP.	0.01uF	50V	B	GRM188B11H103KA01D	K22174823		1-	A	D2
C 4077	CHIP CAP.	0.01uF	50V	B	GRM188B11H103KA01D	K22174823		1-	A	D1
C 4078	CHIP CAP.	100pF	50V	CH	GRM1882C1H101JA01D	K22174235		1-	A	C1
C 4079	CHIP CAP.	0.001uF	50V	B	GRM188B11H102KA01D	K22174821		1-	A	C1
C 4080	CHIP CAP.	0.01uF	50V	B	GRM188B11H103KA01D	K22174823		1-	A	C2
C 4081	CHIP CAP.	0.001uF	50V	B	GRM188B11H102KA01D	K22174821		1-	A	C2
C 4082	CHIP CAP.	0.1uF	16V	B	GRM188B11C104KA01D	K22124805		1-	A	C2
C 4083	CHIP CAP.	0.01uF	50V	B	GRM188B11H103KA01D	K22174823		1-	A	C2
C 4084	CHIP TA.CAP.	1uF	35V		TEESVA1V105M8R	K78160032		1-	A	D3
C 4085	CHIP CAP.	0.0027uF	50V	B	GRM188B11H272KA01D	K22174829		1-	A	E3
C 4086	CHIP CAP.	0.0027uF	50V	B	GRM188B11H272KA01D	K22174829		1-	A	E3
C 4087	CHIP CAP.	0.0012uF	50V	B	GRM188B11H122KA01D	K22174826		1-	A	E3
C 4088	CHIP CAP.	180pF	50V	CH	GRM1882C1H181JA01D	K22174241		1-	A	E3
C 4089	CHIP CAP.	33pF	50V	CH	GRM1882C1H330JA01D	K22174223		1-	A	D2

REF	DESCRIPTION	VALUE	V/W	TOL.	MFR'S DESIG	YAESU P/N	VERS.	LOT	SIDE	LAY ADR
C 4090	CHIP CAP.	0.0018uF	50V	B	GRM188B11H182KA01D	K22174828		1-	A	E3
C 4091	CHIP CAP.	560pF	50V	CH	GRM1882C1H561JA01D	K22174273		1-	A	E3
C 4092	CHIP CAP.	10uF	10V	B	GRM21BB31A106KE18L	K22100808		1-	A	E2
C 4093	CHIP CAP.	0.01uF	50V	B	GRM188B11H103KA01D	K22174823		1-	A	E3
C 4094	CHIP CAP.	0.01uF	50V	B	GRM188B11H103KA01D	K22174823		1-	A	E2
C 4095	AL.ELECTRO.CAP.	100uF	16V		EEE1CA101WP	K48120012		1-	A	C3
C 4096	CHIP CAP.	0.01uF	50V	B	GRM188B11H103KA01D	K22174823		1-	A	C3
C 4097	CHIP CAP.	0.1uF	16V	B	GRM188B11C104KA01D	K22124805		1-	A	C3
C 4098	CHIP CAP.	0.01uF	50V	B	GRM188B11H103KA01D	K22174823		1-	A	B1
C 4099	CHIP CAP.	0.001uF	50V	B	GRM188B11H102KA01D	K22174821		1-	A	B1
C 4100	CHIP CAP.	0.001uF	50V	B	GRM188B11H102KA01D	K22174821		1-	A	A1
C 4101	CHIP CAP.	0.01uF	50V	B	GRM188B11H103KA01D	K22174823		1-	A	A1
C 4102	AL.ELECTRO.CAP.	47uF	16V		EEE1CA470SP	K48120005		1-	A	D1
C 4103	CHIP CAP.	22pF	50V	CH	GRM1882C1H220JA01D	K22174219		1-	A	C2
C 4104	CHIP CAP.	22pF	50V	CH	GRM1882C1H220JA01D	K22174219		1-	A	C2
C 4106	CHIP CAP.	0.1uF	16V	B	GRM188B11C104KA01D	K22124805		1-	A	D2
C 4107	CHIP CAP.	0.01uF	50V	B	GRM188B11H103KA01D	K22174823		1-	A	D3
C 4108	CHIP CAP.	0.01uF	50V	B	GRM188B11H103KA01D	K22174823		1-	A	D2
C 4109	CHIP CAP.	0.1uF	16V	B	GRM188B11C104KA01D	K22124805		1-	A	D3
C 4110	CHIP CAP.	0.01uF	50V	B	GRM188B11H103KA01D	K22174823		1-	A	C2
C 4111	CHIP CAP.	0.001uF	50V	B	GRM188B11H102KA01D	K22174821		1-	A	F3
C 4112	CHIP CAP.	0.01uF	50V	B	GRM188B11H103KA01D	K22174823		1-	A	F3
C 4114	CHIP CAP.	0.01uF	50V	B	GRM188B11H103KA01D	K22174823		1-	A	F3
C 4116	AL.ELECTRO.CAP.	100uF	16V		EEE1CA101WP	K48120012		1-	A	C3
C 4117	AL.ELECTRO.CAP.	100uF	16V		EEE1CA101WP	K48120012		1-	A	D3
C 4118	CHIP CAP.	0.01uF	50V	B	GRM188B11H103KA01D	K22174823		1-	A	C3
C 4119	CHIP CAP.	0.1uF	16V	B	GRM188B11C104KA01D	K22124805		1-	A	F1
C 4120	CHIP CAP.	0.01uF	50V	B	GRM188B11H103KA01D	K22174823		1-	A	F1
C 4121	CHIP CAP.	0.001uF	50V	B	GRM188B11H102KA01D	K22174821		1-	A	D2
C 4122	CHIP CAP.	82pF	50V	CH	GRM1882C1H820JA01D	K22174233		1-	A	E2
C 4123	CHIP CAP.	0.01uF	50V	B	GRM188B11H103KA01D	K22174823		1-	A	D2
C 4124	CHIP CAP.	82pF	50V	CH	GRM1882C1H820JA01D	K22174233		1-	A	E2
C 4126	CHIP CAP.	0.01uF	50V	B	GRM188B11H103KA01D	K22174823		1-	A	F1
C 4127	AL.ELECTRO.CAP.	100uF	16V		EEE1CA101WP	K48120012		1-	A	F1
C 4128	CHIP CAP.	0.001uF	50V	B	GRM188B11H102KA01D	K22174821		1-	A	A1
C 4129	CHIP CAP.	0.001uF	50V	B	GRM188B11H102KA01D	K22174821		1-	A	A1
C 4130	CHIP CAP.	0.01uF	50V	B	GRM188B11H103KA01D	K22174823		1-	A	A1
C 4131	CHIP CAP.	27pF	50V	CH	GRM1882C1H270JA01D	K22174221		1-	A	A1
C 4132	CHIP CAP.	0.1uF	16V	B	GRM188B11C104KA01D	K22124805		1-	A	B1
C 4133	CHIP CAP.	0.001uF	50V	B	GRM188B11H102KA01D	K22174821		1-	A	B1
C 4134	CHIP CAP.	56pF	50V	CH	GRM1882C1H560JA01D	K22174229		1-	A	A1
C 4135	CHIP CAP.	27pF	50V	CH	GRM1882C1H270JA01D	K22174221		1-	A	A1
C 4137	AL.ELECTRO.CAP.	47uF	16V		EEE1CA470SP	K48120005		1-	A	E1
C 4138	CHIP CAP.	10uF	10V	B	GRM21BB31A106KE18L	K22100808		1-	A	D3
C 4139	CHIP CAP.	0.1uF	16V	B	GRM188B11C104KA01D	K22124805		1-	A	D3
C 4140	CHIP CAP.	0.1uF	16V	B	GRM188B11C104KA01D	K22124805		1-	A	D3
C 4141	CHIP CAP.	0.1uF	16V	B	GRM188B11C104KA01D	K22124805		1-	A	D3
C 4142	CHIP CAP.	0.1uF	16V	B	GRM188B11C104KA01D	K22124805		1-	A	D3
C 4143	CHIP CAP.	0.1uF	16V	B	GRM188B11C104KA01D	K22124805		1-	A	D3
C 4144	CHIP CAP.	10uF	10V	B	GRM21BB31A106KE18L	K22100808		1-	A	D3
C 4145	CHIP TA.CAP.	1uF	35V		TEESVA1V105M8R	K78160032		1-	A	C3
C 4146	CHIP CAP.	0.01uF	50V	B	GRM188B11H103KA01D	K22174823		1-	A	D2
C 4147	CHIP CAP.	0.1uF	16V	B	GRM188B11C104KA01D	K22124805		1-	A	F3
C 4148	CHIP CAP.	0.1uF	16V	B	GRM188B11C104KA01D	K22124805		1-	A	F3
C 4149	CHIP CAP.	0.001uF	50V	B	GRM188B11H102KA01D	K22174821		1-	A	E2
C 4151	CHIP CAP.	0.001uF	50V	B	GRM188B11H102KA01D	K22174821		1-	A	E1
C 4152	CHIP CAP.	0.01uF	50V	B	GRM188B11H103KA01D	K22174823		1-	A	D2
C 4153	CHIP CAP.	82pF	50V	CH	GRM1882C1H820JA01D	K22174233		1-	A	E1
C 4154	CHIP CAP.	18pF	50V	CH	GRM1882C1H180JA01D	K22174217		1-	A	D1
C 4156	CHIP CAP.	10pF	50V	CH	GRM1882C1H100JA01D	K22174211		1-	A	D2
C 4159	CHIP CAP.	0.01uF	50V	B	GRM188B11H103KA01D	K22174823		1-	A	D3
C 4160	CHIP CAP.	10pF	50V	CH	GRM1882C1H100JA01D	K22174211		1-	A	D2
C 4161	CHIP CAP.	18pF	50V	CH	GRM1882C1H180JA01D	K22174217		1-	A	F2
C 4162	CHIP CAP.	10uF	10V	B	GRM21BB31A106KE18L	K22100808		1-	A	D2
C 4163	CHIP CAP.	10uF	10V	B	GRM21BB31A106KE18L	K22100808		1-	A	D3
C 4164	CHIP CAP.	0.01uF	50V	B	GRM188B11H103KA01D	K22174823		1-	A	D2
C 4165	CHIP TA.CAP.	0.1uF	35V		TEESVA1V104M8R	K78160025		1-	A	F1
C 4167	CHIP CAP.	0.01uF	50V	B	GRM188B11H103KA01D	K22174823		1-	A	F1
C 4168	CHIP CAP.	0.01uF	50V	B	GRM188B11H103KA01D	K22174823		1-	A	D2
C 4169	CHIP CAP.	33pF	50V	CH	GRM1882C1H330JA01D	K22174223		1-	A	D2
C 4170	CHIP CAP.	0.01uF	50V	B	GRM188B11H103KA01D	K22174823		1-	A	D2
C 4171	CHIP CAP.	82pF	50V	CH	GRM1882C1H820JA01D	K22174233		1-	A	E1
C 4172	CHIP CAP.	0.001uF	50V	B	GRM188B11H102KA01D	K22174821		1-	A	E1

REF	DESCRIPTION	VALUE	V/W	TOL.	MFR'S DESIG	YAESU P/N	VERS.	LOT	SIDE	LAY ADR
C 4176	CHIP CAP.	10uF	10V	B	GRM21BB31A106KE18L	K22100808		1-	A	D3
C 4177	CHIP CAP.	0.001uF	50V	B	GRM188B11H102KA01D	K22174821		1-	A	D2
C 4178	CHIP CAP.	0.001uF	50V	B	GRM188B11H102KA01D	K22174821		1-	A	D2
C 4179	CHIP CAP.	0.01uF	50V	B	GRM188B11H103KA01D	K22174823		1-	A	C1
C 4180	CHIP CAP.	0.01uF	50V	B	GRM188B11H103KA01D	K22174823		1-	A	C1
C 4181	CHIP CAP.	330pF	50V	CH	GRM1882C1H331JA01D	K22174253		1-	A	B1
C 4182	CHIP CAP.	330pF	50V	CH	GRM1882C1H331JA01D	K22174253		1-	A	B1
C 4183	CHIP CAP.	0.001uF	50V	B	GRM188B11H102KA01D	K22174821		1-	A	B1
C 4184	CHIP CAP.	0.001uF	50V	B	GRM188B11H102KA01D	K22174821		1-	A	A1
C 4185	CHIP CAP.	0.01uF	50V	B	GRM188B11H103KA01D	K22174823		1-	A	B1
C 4186	CHIP CAP.	0.1uF	16V	B	GRM188B11C104KA01D	K22124805		1-	A	C1
C 4187	CHIP CAP.	0.01uF	50V	B	GRM188B11H103KA01D	K22174823		1-	A	B1
C 4188	CHIP CAP.	0.01uF	50V	B	GRM188B11H103KA01D	K22174823		1-	A	B1
CF4001	CERAMIC FILTER				SFELF10M7FA00-B0	H3900408		1-	A	C2
D 4002	DIODE				1SV323(TPH3.F)	G2071006		1-	A	A1
D 4003	DIODE				1SV323(TPH3.F)	G2071006		1-	A	A1
D 4004	DIODE				1SV323(TPH3.F)	G2071006		1-	A	B1
D 4005	DIODE				1SV323(TPH3.F)	G2071006		1-	A	B1
D 4006	DIODE				1SV323(TPH3.F)	G2071006		1-	A	A2
D 4007	DIODE				1SV323(TPH3.F)	G2071006		1-	A	A2
D 4008	DIODE				1SV323(TPH3.F)	G2071006		1-	A	B2
D 4009	DIODE				1SV323(TPH3.F)	G2071006		1-	A	B2
D 4011	DIODE				1SV323(TPH3.F)	G2071006		1-	A	A2
D 4012	DIODE				1SV323(TPH3.F)	G2071006		1-	A	B2
D 4014	DIODE				1SV323(TPH3.F)	G2071006		1-	A	A3
D 4015	DIODE				1SV323(TPH3.F)	G2071006		1-	A	B3
D 4017	DIODE				1SV325(TPH3.F)	G2070848		1-	A	A3
D 4018	DIODE				1SV325(TPH3.F)	G2070848		1-	A	A3
D 4019	DIODE				1SV325(TPH3.F)	G2070848		1-	A	B3
D 4020	DIODE				1SV325(TPH3.F)	G2070848		1-	A	B3
D 4022	DIODE				UDZS TE-17 6.2B	G2070912		1-	A	D1
D 4023	DIODE				UDZS TE-17 8.2B	G2070890		1-	A	C3
D 4024	DIODE				RN142S TE61	G2070994		1-	A	B1
D 4025	DIODE				BAS316	G2070716		1-	A	B1
D 4026	DIODE				BAS316	G2070716		1-	A	C2
D 4027	DIODE				BAS316	G2070716		1-	A	C1
FB4001	FERRITE BEADS				BLM18BD601SN1D	L9190143		1-	A	F2
FB4002	FERRITE BEADS				BLM18BD601SN1D	L9190143		1-	A	F2
FB4003	FERRITE BEADS				BLM18BD601SN1D	L9190143		1-	A	F2
FB4004	FERRITE BEADS				BLM18BD601SN1D	L9190143		1-	A	F2
FB4005	FERRITE BEADS				BLM18BD601SN1D	L9190143		1-	A	F2
FB4006	FERRITE BEADS				BLM18BD601SN1D	L9190143		1-	A	F2
FB4007	FERRITE BEADS				BLM18BD601SN1D	L9190143		1-	A	F1
FB4008	FERRITE BEADS				BLM18BD601SN1D	L9190143		1-	A	F1
FB4009	FERRITE BEADS				BLM18BD601SN1D	L9190143		1-	A	F2
FB4010	FERRITE BEADS				BLM18BD601SN1D	L9190143		1-	A	F1
FB4011	FERRITE BEADS				BLM18BD601SN1D	L9190143		1-	A	F1
FB4012	FERRITE BEADS				BLM18BD601SN1D	L9190143		1-	A	F1
FB4013	FERRITE BEADS				BLM18BD601SN1D	L9190143		1-	A	F1
FB4015	FERRITE BEADS				BLM18BD601SN1D	L9190143		1-	A	F1
FB4016	FERRITE BEADS				BLM18BD601SN1D	L9190143		1-	A	F1
FB4017	FERRITE BEADS				BLM18BD601SN1D	L9190143		1-	A	F1
FB4018	FERRITE BEADS				BLM18BD601SN1D	L9190143		1-	A	F1
J 4001	CONNECTOR				30FLT-SM2-TB(LF)(SN)(M)	P1091142		1-	A	F1
J 4002	CONNECTOR				TMP-J01X-V6	P1090210		1-	A	A2
J 4003	CONNECTOR				TMP-J01X-V6	P1090210		1-	A	F3
J 4004	CONNECTOR				TMP-J01X-V6	P1090210		1-	A	E1
L 4001	M.RFC	0.18uH		2%	0805CS-181XGLC	L1691637		1-	A	A1
L 4002	M.RFC	0.33uH		2%	0805CS-331XGLC	L1691640		1-	A	A2
L 4003	M.RFC	0.33uH		2%	0805CS-331XGLC	L1691640		1-	A	A2
L 4004	M.RFC	0.47uH		2%	0805CS-471XGLC	L1691642		1-	A	A3
L 4005	M.RFC	0.18uH		2%	0805CS-181XGLC	L1691637		1-	A	B1
L 4006	M.RFC	0.05uH		2%	C6342A-50NG-RA	L1691084		1-	A	B1
L 4007	M.RFC	0.18uH		2%	0805CS-181XGLC	L1691637		1-	A	B1
L 4009	M.RFC	0.067uH		2%	C6342A-67NG-RA	L1691085		1-	A	B2
L 4010	M.RFC	0.33uH		2%	0805CS-331XGLC	L1691640		1-	A	B2
L 4012	M.RFC	0.088uH		2%	C6342A-88NG-RA	L1691086		1-	A	B3
L 4013	M.RFC	0.33uH		2%	0805CS-331XGLC	L1691640		1-	A	B2
L 4014	M.RFC	0.33uH		2%	0805CS-331XGLC	L1691640		1-	A	B2
L 4016	M.RFC	0.33uH		2%	0805CS-331XGLC	L1691640		1-	A	B2
L 4017	M.RFC	0.47uH		2%	0805CS-471XGLC	L1691642		1-	A	B3
L 4019	M.RFC	0.11uH		2%	C6342A-R11G-RA	L1691087		1-	A	B3
L 4020	M.RFC	0.47uH		2%	0805CS-471XGLC	L1691642		1-	A	B3

REF	DESCRIPTION	VALUE	V/W	TOL.	MFR'S DESIG	YAESU P/N	VERS.	LOT	SIDE	LAY ADR
L 4021	M.RFC	0.18uH		2%	0805CS-181XGLC	L1691637		1-	A	B1
L 4022	M.RFC	0.33uH		2%	0805CS-331XGLC	L1691640		1-	A	B2
L 4023	M.RFC	0.33uH		2%	0805CS-331XGLC	L1691640		1-	A	B2
L 4024	M.RFC	0.47uH		2%	0805CS-471XGLC	L1691642		1-	A	B3
L 4025	M.RFC	0.1uH			HK1608 R10J-T	L1690528		1-	A	C2
L 4026	M.RFC	1uH			LK1608 1R0K-T	L1690687		1-	A	E2
L 4027	M.RFC	1uH			LK1608 1R0K-T	L1690687		1-	A	E2
L 4028	M.RFC	1uH			LK1608 1R0K-T	L1690687		1-	A	C1
L 4029	M.RFC	1uH			LK1608 1R0K-T	L1690687		1-	A	D1
L 4030	M.RFC	1uH			LK1608 1R0K-T	L1690687		1-	A	C2
L 4031	M.RFC	56uH			LLM3225-560J	L1691142		1-	A	E3
L 4032	M.RFC	68uH			LLM3225-680J	L1691143		1-	A	E3
L 4033	M.RFC	56uH			LLM3225-560J	L1691142		1-	A	E3
L 4034	M.RFC	1uH			LK1608 1R0K-T	L1690687		1-	A	A1
L 4035	M.RFC	0.22uH		5%	C2012C-R22J	L1690796		1-	A	D2
L 4036	M.RFC	0.12uH		2%	0805CS-121XGLC	L1691635		1-	A	A1
L 4037	M.RFC	0.12uH		2%	0805CS-121XGLC	L1691635		1-	A	A1
L 4038	M.RFC	1uH			LK1608 1R0K-T	L1690687		1-	A	D3
L 4039	M.RFC	1uH			LK1608 1R0K-T	L1690687		1-	A	D3
L 4040	M.RFC	0.22uH		2%	0805CS-221XGLC	L1691638		1-	A	E1
Q 4001	FET				2SK508-T2B K52 A	G3805087B		1-	A	B2
Q 4002	FET				2SK508-T2B K52 A	G3805087B		1-	A	B2
Q 4003	TRANSISTOR				DTC114EUA T106	G3070084		1-	A	B1
Q 4004	TRANSISTOR				DTC114EUA T106	G3070084		1-	A	C2
Q 4005	FET				2SK508-T2B K52 A	G3805087B		1-	A	B3
Q 4006	TRANSISTOR				DTC114EUA T106	G3070084		1-	A	B2
Q 4007	FET				2SK508-T2B K52 A	G3805087B		1-	A	B3
Q 4008	TRANSISTOR				DTC114EUA T106	G3070084		1-	A	C3
Q 4009	IC				UPC2712TB-E3	G1095032		1-	A	C2
Q 4010	TRANSISTOR				2SC4081 T106	G3340818		1-	A	D1
Q 4011	IC				ADF4116BRUZ(TAPE)	G1093581		1-	A	C1
Q 4012	IC				AD9834BRUZ-REEL7	G1094297		1-	A	E3
Q 4013	IC				UPB1509GV-E1	G1093149		1-	A	C1
Q 4014	TRANSISTOR				DTA144EU T106	G3070079		1-	A	D2
Q 4015	TRANSISTOR				2SC4215Y(TE85R.F)	G3342157Y		1-	A	C2
Q 4016	TRANSISTOR				2SC4215Y(TE85R.F)	G3342157Y		1-	A	E2
Q 4017	TRANSISTOR				DTC144EUA T106	G3070041		1-	A	D3
Q 4018	IC				UPC2712TB-E3	G1095032		1-	A	A1
Q 4019	TRANSISTOR				DTC144EUA T106	G3070041		1-	A	D2
Q 4020	TRANSISTOR				2SC4081 T106	G3340818		1-	A	F3
Q 4021	TRANSISTOR				2SC4081 T106	G3340818		1-	A	F3
Q 4022	TRANSISTOR				2SC4081 T106	G3340818		1-	A	C3
Q 4023	TRANSISTOR				2SC4215Y(TE85R.F)	G3342157Y		1-	A	D2
Q 4025	IC				AD9834BRUZ-REEL7	G1094297		1-	A	C3
Q 4026	TRANSISTOR				2SC4215Y(TE85R.F)	G3342157Y		1-	A	E2
Q 4027	TRANSISTOR				2SC4215Y(TE85R.F)	G3342157Y		1-	A	D2
Q 4028	IC				UPC2933BT-E1-AZ	G1094338		1-	A	F1
Q 4029	TRANSISTOR				2SC4215Y(TE85R.F)	G3342157Y		1-	A	D2
Q 4031	IC				TA75S01F(TE85R.F)	G1091593		1-	A	D3
Q 4032	TRANSISTOR				DTC114EUA T106	G3070084		1-	A	C1
Q 4033	TRANSISTOR				DTC144EUA T106	G3070041		1-	A	B1
R 4001	CHIP RES.	47	1/16W	5%	RMC1/16 470JATP	J24185470		1-	A	A1
R 4002	CHIP RES.	47	1/16W	5%	RMC1/16 470JATP	J24185470		1-	A	A2
R 4004	CHIP RES.	47	1/16W	5%	RMC1/16 470JATP	J24185470		1-	A	A3
R 4009	CHIP RES.	47	1/16W	5%	RMC1/16 470JATP	J24185470		1-	A	A3
R 4011	CHIP RES.	680	1/16W	5%	RMC1/16 681JATP	J24185681		1-	A	B1
R 4013	CHIP RES.	680	1/16W	5%	RMC1/16 681JATP	J24185681		1-	A	B2
R 4015	CHIP RES.	680	1/16W	5%	RMC1/16 681JATP	J24185681		1-	A	B2
R 4019	CHIP RES.	680	1/16W	5%	RMC1/16 681JATP	J24185681		1-	A	B3
R 4020	CHIP RES.	100	1/16W	5%	RMC1/16 101JATP	J24185101		1-	A	C2
R 4021	CHIP RES.	680	1/16W	5%	RMC1/16 681JATP	J24185681		1-	A	B1
R 4022	CHIP RES.	680	1/16W	5%	RMC1/16 681JATP	J24185681		1-	A	B2
R 4023	CHIP RES.	680	1/16W	5%	RMC1/16 681JATP	J24185681		1-	A	B2
R 4024	CHIP RES.	680	1/16W	5%	RMC1/16 681JATP	J24185681		1-	A	B3
R 4025	CHIP RES.	100	1/16W	5%	RMC1/16 101JATP	J24185101		1-	A	D1
R 4026	CHIP RES.	100	1/16W	5%	RMC1/16 101JATP	J24185101		1-	A	C1
R 4027	CHIP RES.	100	1/16W	5%	RMC1/16 101JATP	J24185101		1-	A	C1
R 4028	CHIP RES.	220	1/16W	5%	RMC1/16 221JATP	J24185221		1-	A	C1
R 4029	CHIP RES.	680	1/16W	5%	RMC1/16 681JATP	J24185681		1-	A	C1
R 4030	CHIP RES.	10k	1/16W	5%	RMC1/16 103JATP	J24185103		1-	A	C1
R 4031	CHIP RES.	200	1/16W	1%	RMC1/16 201FTP	J24183201		1-	A	E3
R 4032	CHIP RES.	6.8k	1/16W	5%	RMC1/16 682JATP	J24185682		1-	A	E3
R 4033	CHIP RES.	200	1/16W	1%	RMC1/16 201FTP	J24183201		1-	A	E3

REF	DESCRIPTION	VALUE	V/W	TOL.	MFR'S DESIG	YAESU P/N	VERS.	LOT	SIDE	LAY ADR
R 4034	CHIP RES.	100	1/16W	5%	RMC1/16 101JATP	J24185101		1-	A	E3
R 4035	CHIP RES.	100	1/16W	5%	RMC1/16 101JATP	J24185101		1-	A	E3
R 4036	CHIP RES.	100	1/16W	5%	RMC1/16 101JATP	J24185101		1-	A	E3
R 4037	CHIP RES.	1k	1/16W	5%	RMC1/16 102JATP	J24185102		1-	A	E3
R 4038	CHIP RES.	100	1/16W	5%	RMC1/16 101JATP	J24185101		1-	A	C1
R 4039	CHIP RES.	100	1/16W	5%	RMC1/16 101JATP	J24185101		1-	A	D1
R 4040	CHIP RES.	100	1/16W	5%	RMC1/16 101JATP	J24185101		1-	A	D1
R 4041	CHIP RES.	100	1/16W	5%	RMC1/16 101JATP	J24185101		1-	A	D1
R 4042	CHIP RES.	100k	1/16W	5%	RMC1/16 104JATP	J24185104		1-	A	D2
R 4043	CHIP RES.	47	1/16W	5%	RMC1/16 470JATP	J24185470		1-	A	C1
R 4044	CHIP RES.	220	1/16W	5%	RMC1/16 221JATP	J24185221		1-	A	C2
R 4045	CHIP RES.	33k	1/16W	5%	RMC1/16 333JATP	J24185333		1-	A	C2
R 4046	CHIP RES.	4.7k	1/16W	5%	RMC1/16 472JATP	J24185472		1-	A	D3
R 4047	CHIP RES.	100k	1/16W	5%	RMC1/16 104JATP	J24185104		1-	A	E3
R 4048	CHIP RES.	220	1/16W	5%	RMC1/16 221JATP	J24185221		1-	A	E2
R 4049	CHIP RES.	33k	1/16W	5%	RMC1/16 333JATP	J24185333		1-	A	E2
R 4050	CHIP RES.	47	1/16W	5%	RMC1/16 470JATP	J24185470		1-	A	E2
R 4051	CHIP RES.	0	1/16W	5%	RMC1/16 000JATP	J24185000		1-	A	A1
R 4053	CHIP RES.	3.3k	1/16W	5%	RMC1/16 332JATP	J24185332		1-	A	D2
R 4054	CHIP RES.	33k	1/16W	5%	RMC1/16 333JATP	J24185333		1-	A	D2
R 4055	CHIP RES.	200	1/16W	1%	RMC1/16 201FTP	J24183201		1-	A	C3
R 4056	CHIP RES.	200	1/16W	1%	RMC1/16 201FTP	J24183201		1-	A	C3
R 4058	CHIP RES.	220	1/16W	5%	RMC1/16 221JATP	J24185221		1-	A	F3
R 4059	CHIP RES.	100k	1/16W	5%	RMC1/16 104JATP	J24185104		1-	A	F3
R 4060	CHIP RES.	470	1/16W	5%	RMC1/16 471JATP	J24185471		1-	A	F3
R 4061	CHIP RES.	2.2k	1/16W	5%	RMC1/16 222JATP	J24185222		1-	A	F3
R 4062	CHIP RES.	470	1/16W	5%	RMC1/16 471JATP	J24185471		1-	A	F3
R 4063	CHIP RES.	47	1/16W	5%	RMC1/16 470JATP	J24185470		1-	A	C3
R 4064	CHIP RES.	470	1/16W	5%	RMC1/16 471JATP	J24185471		1-	A	D2
R 4067	CHIP RES.	2.2k	1/16W	5%	RMC1/16 222JATP	J24185222		1-	A	D2
R 4068	CHIP RES.	100k	1/16W	5%	RMC1/16 104JATP	J24185104		1-	A	D2
R 4069	CHIP RES.	220	1/16W	5%	RMC1/16 221JATP	J24185221		1-	A	D2
R 4070	CHIP RES.	100	1/16W	5%	RMC1/16 101JATP	J24185101		1-	A	C3
R 4071	CHIP RES.	100	1/16W	5%	RMC1/16 101JATP	J24185101		1-	A	C3
R 4072	CHIP RES.	100	1/16W	5%	RMC1/16 101JATP	J24185101		1-	A	C3
R 4073	CHIP RES.	6.8k	1/16W	5%	RMC1/16 682JATP	J24185682		1-	A	D3
R 4074	CHIP RES.	47	1/16W	5%	RMC1/16 470JATP	J24185470		1-	A	F3
R 4075	CHIP RES.	22k	1/16W	5%	RMC1/16 223JATP	J24185223		1-	A	E2
R 4076	CHIP RES.	22k	1/16W	5%	RMC1/16 223JATP	J24185223		1-	A	E2
R 4077	CHIP RES.	470	1/16W	5%	RMC1/16 471JATP	J24185471		1-	A	E2
R 4078	CHIP RES.	47	1/16W	5%	RMC1/16 470JATP	J24185470		1-	A	E2
R 4081	CHIP RES.	10k	1/16W	5%	RMC1/16 103JATP	J24185103		1-	A	D2
R 4083	CHIP RES.	1.5k	1/16W	1%	RMC1/16 152FTP	J24183152		1-	A	D3
R 4085	CHIP RES.	47	1/16W	5%	RMC1/16 470JATP	J24185470		1-	A	D2
R 4086	CHIP RES.	100k	1/16W	5%	RMC1/16 104JATP	J24185104		1-	A	C2
R 4087	CHIP RES.	220	1/16W	5%	RMC1/16 221JATP	J24185221		1-	A	D2
R 4088	CHIP RES.	33k	1/16W	5%	RMC1/16 333JATP	J24185333		1-	A	D2
R 4089	CHIP RES.	1k	1/16W	5%	RMC1/16 102JATP	J24185102		1-	A	E1
R 4091	CHIP RES.	3.3k	1/16W	1%	RMC1/16 332FTP	J24183332		1-	A	D3
R 4092	CHIP RES.	10	1/16W	5%	RMC1/16 100JATP	J24185100		1-	A	D2
R 4094	CHIP RES.	10k	1/16W	1%	RMC1/16 103FTP	J24183103		1-	A	D3
R 4095	CHIP RES.	10k	1/16W	1%	RMC1/16 103FTP	J24183103		1-	A	D3
R 4096	CHIP RES.	10k	1/16W	1%	RMC1/16 103FTP	J24183103		1-	A	D3
R 4098	CHIP RES.	470	1/16W	5%	RMC1/16 471JATP	J24185471		1-	A	C1
R 4099	CHIP RES.	3.3k	1/16W	5%	RMC1/16 332JATP	J24185332		1-	A	C1
R 4100	CHIP RES.	220	1/16W	1%	RMC1/16 221FTP	J24183221		1-	A	B1
R 4101	CHIP RES.	18	1/16W	5%	RMC1/16 180JATP	J24185180		1-	A	B1
R 4102	CHIP RES.	2.2k	1/16W	5%	RMC1/16 222JATP	J24185222		1-	A	B1
R 4103	CHIP RES.	2.2k	1/16W	5%	RMC1/16 222JATP	J24185222		1-	A	B1
R 4104	CHIP RES.	10k	1/16W	5%	RMC1/16 103JATP	J24185103		1-	A	B1
R 4105	CHIP RES.	100	1/16W	5%	RMC1/16 101JATP	J24185101		1-	A	B1
T 4001	BALUN TRANSFOMERS				#617DS-1710	L0190275		1-	A	C1
T 4002	BALUN TRANSFOMERS				#458PT-1565	L0190273		1-	A	C2
T 4006	COIL 07RF	160MHz			160M R12-K905X	L0022053		1-	A	A1
T 4007	BALUN TRANSFOMERS				#458PT-1565	L0190273		1-	A	B1
TC4001	TRIMMER CAP.	10pF			TZB4Z100AB10R00	K91000279		1-	A	B2
TC4002	TRIMMER CAP.	10pF			TZB4Z100AB10R00	K91000279		1-	A	B2
TC4003	TRIMMER CAP.	10pF			TZB4Z100AB10R00	K91000279		1-	A	B3
TC4004	TRIMMER CAP.	10pF			TZB4Z100AB10R00	K91000279		1-	A	B3
TP4005	CHECK TERMINAL				RCTCTE	Q5000103		1-	A	C1
X 4001	TCXO	40MHz			TTS18VSH 40.00000MHZ	H9501260		1-	A	D3
X 4001	VCTCXO	40MHz			TC300-008 40MHZ	H9501400		3-	A	D3
	SHIELD CASE COVER				(33X47)	RA0978800		1-		

REF	DESCRIPTION	VALUE	V/W	TOL.	MFR'S DESIG	YAESU P/N	VERS.	LOT	SIDE	LAY ADR
	SHIELD CASE				(33X47)	RA0830500		1-		

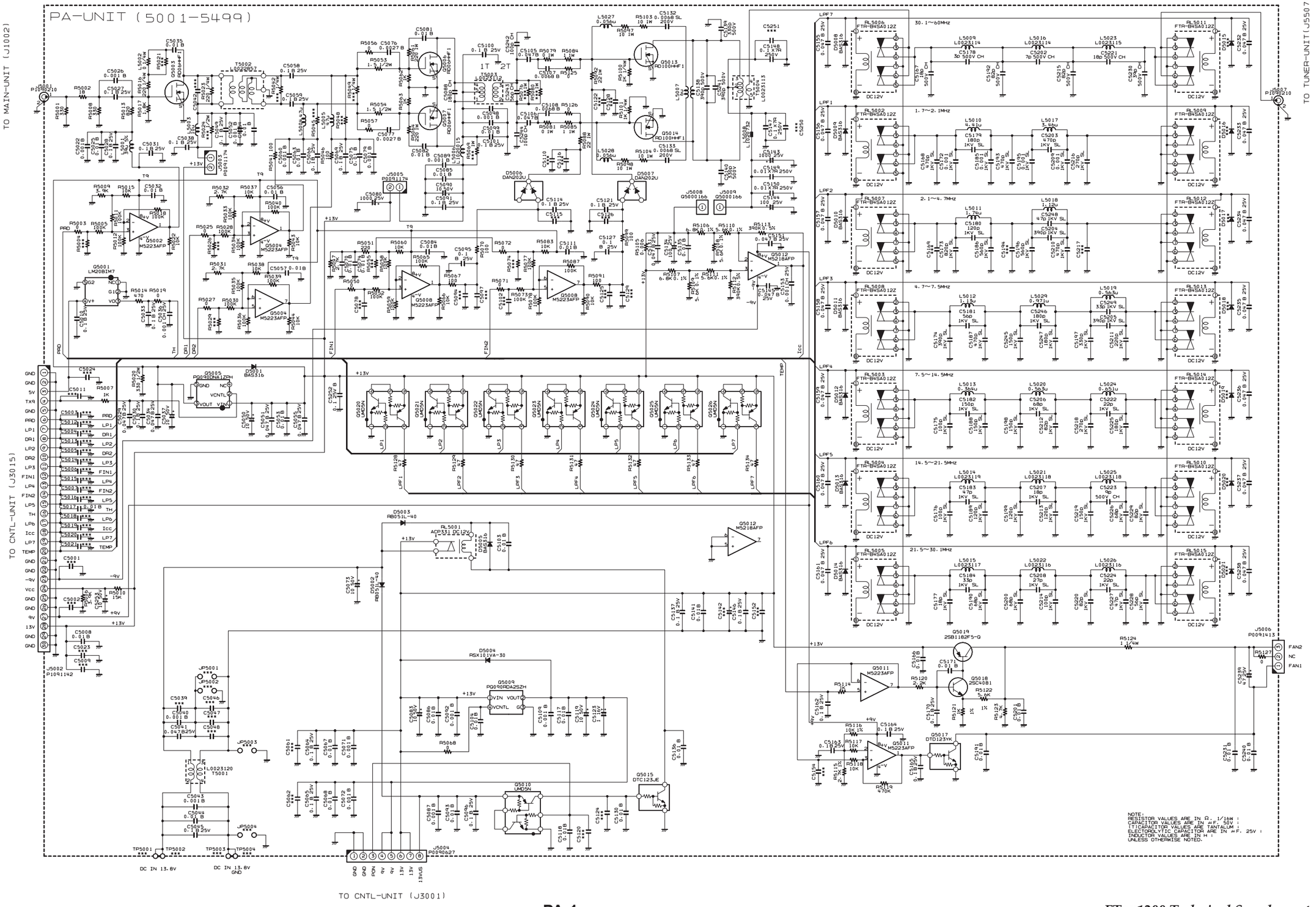
PA-UNIT (5001-5499)
TO MAIN-UNIT (J1002)
TO TUNER-UNIT (J5507)
TO CNTL-UNIT (J3015)
TO CNTL-UNIT (J3001)
30.1~60MHz
1.7~2.1MHz
2.1~4.7MHz
4.7~7.5MHz
7.5~14.5MHz
14.5~21.5MHz
21.5~30.1MHz
DC IN 13.8V
NOTE:
RESISTOR VALUES ARE IN Ω, 1/16W ;
CAPACITOR VALUES ARE IN μF, 50V ;
ETICAPACITOR VALUES ARE TANTALUM ;
ELECTROLYTIC CAPACITOR ARE IN μF, 25V ;
INDUCTOR VALUES ARE IN H ;
UNLESS OTHERWISE NOTED.

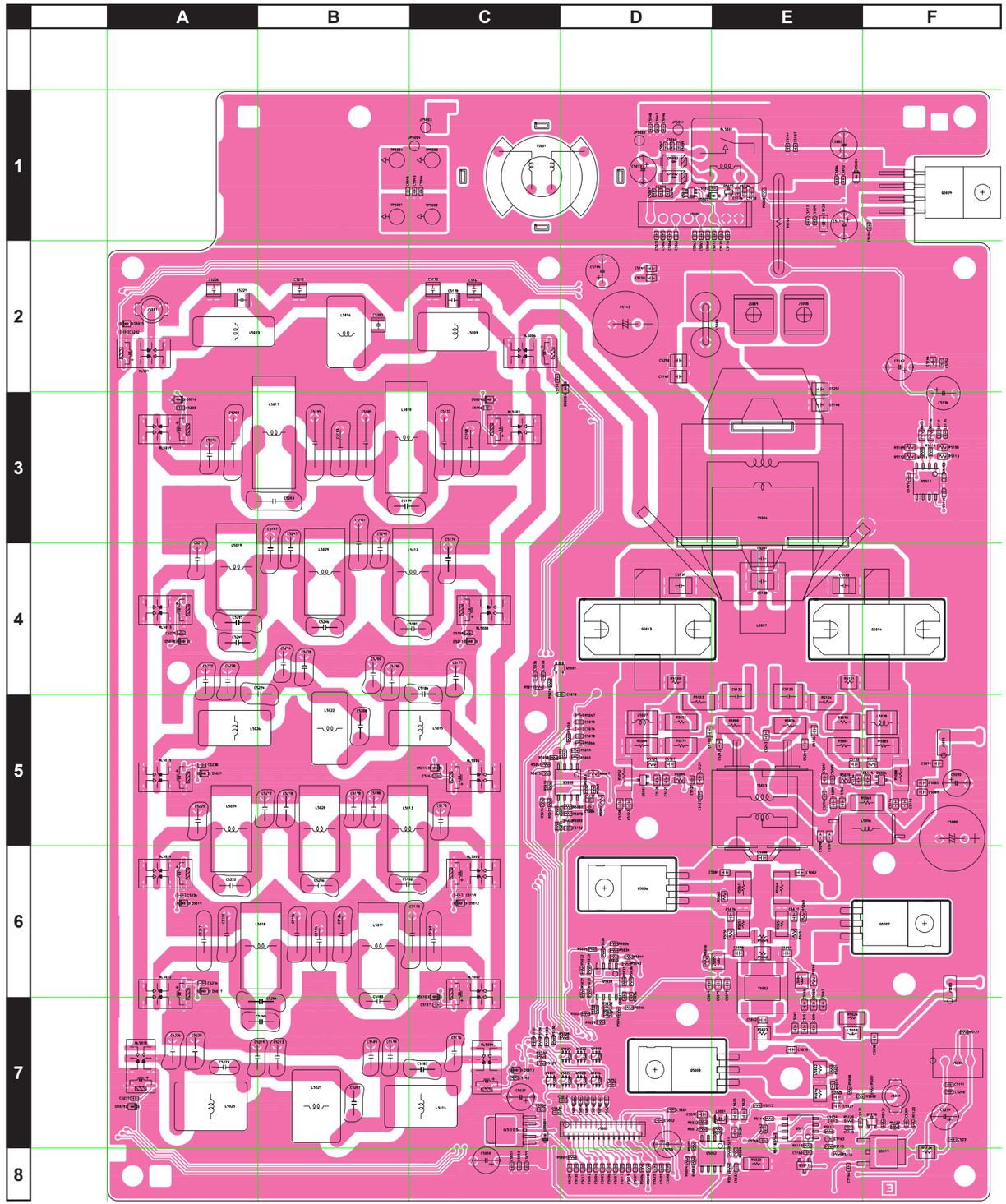
A
B
C
D
E
F
1
2
3
4
5
6
7
8

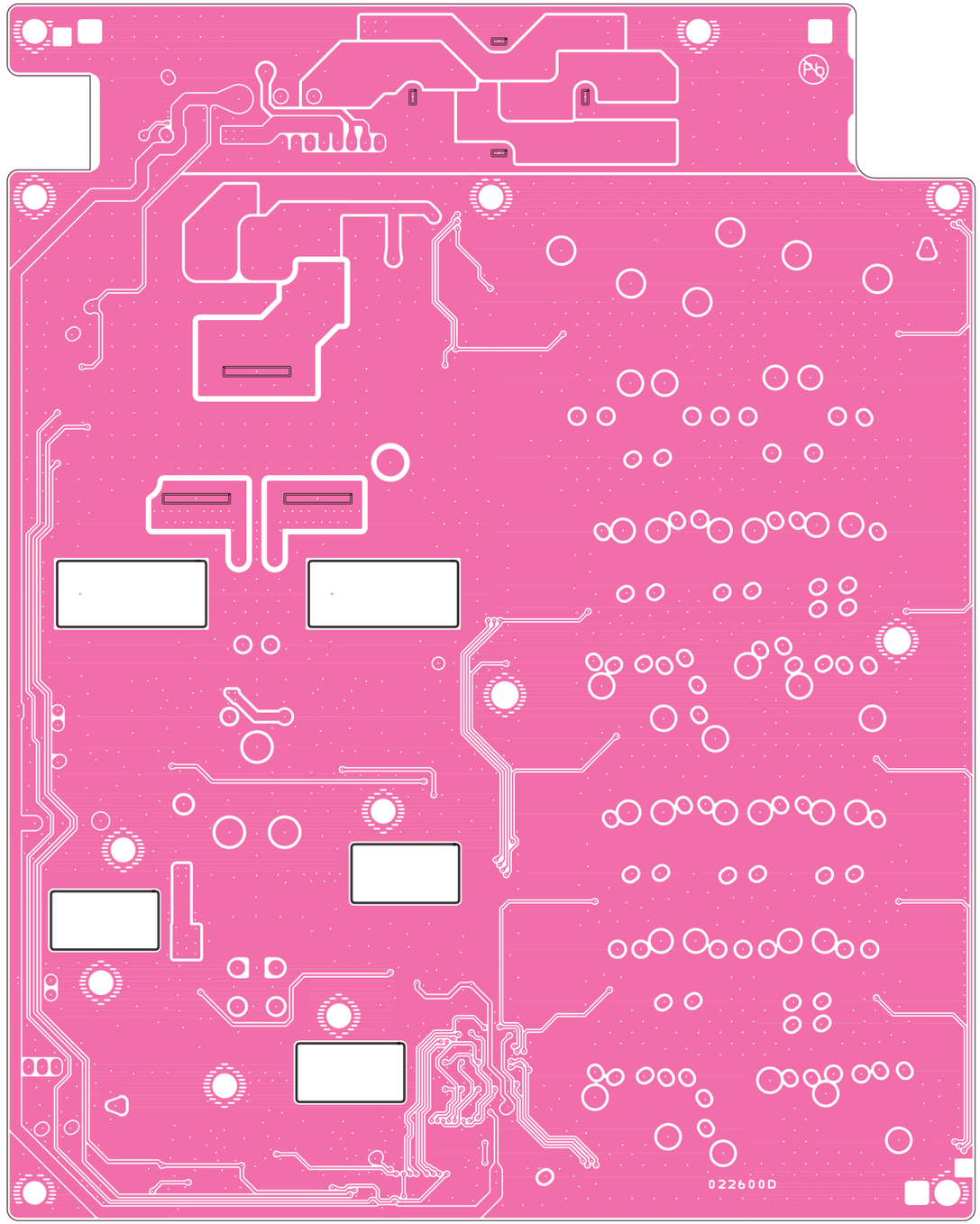
022600D

REF	DESCRIPTION	VALUE	V/W	TOL.	MFR'S DESIG	YAESU P/N	VERS.	LOT	SIDE	LAY ADR
	PCB with Components					CS2183101				
C 5008	CHIP CAP.	0.01uF	50V	B	GRM188B11H103KA01D	K22174823		1-	A	D8
C 5010	CHIP CAP.	0.1uF	25V	B	GRM188B11E104KA01D	K22144814		1-	A	C4
C 5017	CHIP CAP.	0.01uF	50V	B	GRM188B11H103KA01D	K22174823		1-	A	D8
C 5022	CHIP CAP.	0.001uF	50V	B	GRM216B11H102KA01D	K22170805		1-	A	E7
C 5025	CHIP CAP.	0.01uF	50V	B	GRM216B11H103KA01D	K22170817		1-	A	E7
C 5026	CHIP CAP.	0.001uF	50V	B	GRM216B11H102KA01D	K22170805		1-	A	E7
C 5027	CHIP CAP.	0.1uF	25V	B	GRM21BB11E104KA01L	K22140811		1-	A	E7
C 5028	CHIP CAP.	0.1uF	25V	B	GRM21BB11E104KA01L	K22140811		1-	A	E7
C 5029	CHIP CAP.	0.047uF	25V	B	GRM188B11E473KA01D	K22144811		1-	A	D8
C 5030	CHIP CAP.	0.1uF	25V	B	GRM188B11E104KA01D	K22144814		1-	A	D8
C 5031	CHIP CAP.	0.1uF	25V	B	GRM21BB11E104KA01L	K22140811		1-	A	D7
C 5032	CHIP CAP.	0.01uF	50V	B	GRM188B11H103KA01D	K22174823		1-	A	E8
C 5033	CHIP CAP.	0.1uF	25V	B	GRM188B11E104KA01D	K22144814		1-	A	C4
C 5034	CHIP CAP.	0.047uF	25V	B	GRM188B11E473KA01D	K22144811		1-	A	C7
C 5035	CHIP CAP.	0.01uF	50V	B	GRM216B11H103KA01D	K22170817		1-	A	E7
C 5036	CHIP CAP.	0.001uF	25V	CH	GRM1882C1E102JA01D	K22144204		1-	A	C4
C 5037	AL.ELECTRO.CAP.	10uF	50V		RE2-50V100ME3#-T2	K46170021		1-	A	C7
C 5038	CHIP CAP.	0.1uF	25V	B	GRM21BB11E104KA01L	K22140811		1-	A	F7
C 5040	CHIP CAP.	0.001uF	50V	B	GRM188B11H102KA01D	K22174821		1-	A	D1
C 5041	CHIP CAP.	0.047uF	25V	B	GRM188B11E473KA01D	K22144811		1-	A	D1
C 5043	CHIP CAP.	0.001uF	50V	B	GRM188B11H102KA01D	K22174821		1-	A	C1
C 5044	CHIP CAP.	0.01uF	50V	B	GRM188B11H103KA01D	K22174823		1-	A	C1
C 5045	CHIP CAP.	0.1uF	25V	B	GRM188B11E104KA01D	K22144814		1-	A	B1
C 5049	CHIP CAP.	0.1uF	25V	B	GRM21BB11E104KA01L	K22140811		1-	A	E7
C 5050	AL.ELECTRO.CAP.	10uF	50V		RE2-50V100ME3#-T2	K46170021		1-	A	C8
C 5051	CHIP CAP.	0.047uF	25V	B	GRM188B11E473KA01D	K22144811		1-	A	C8
C 5052	CHIP CAP.	0.001uF	50V	B	GRM216B11H102KA01D	K22170805		1-	A	E7
C 5053	CHIP CAP.	0.01uF	50V	B	GRM188B11H103KA01D	K22174823		1-	A	C8
C 5054	CHIP CAP.	0.01uF	50V	B	GRM216B11H103KA01D	K22170817		1-	A	E7
C 5055	CHIP CAP.	0.047uF	25V	B	GRM188B11E473KA01D	K22144811		1-	A	C8
C 5056	CHIP CAP.	0.01uF	50V	B	GRM188B11H103KA01D	K22174823		1-	A	D6
C 5057	CHIP CAP.	0.01uF	50V	B	GRM188B11H103KA01D	K22174823		1-	A	D6
C 5058	CHIP CAP.	0.1uF	25V	B	GRM21BB11E104KA01L	K22140811		1-	A	E6
C 5059	CHIP CAP.	0.1uF	25V	B	GRM21BB11E104KA01L	K22140811		1-	A	E6
C 5060	CHIP CAP.	0.001uF	50V	B	GRM216B11H102KA01D	K22170805		1-	A	E7
C 5063	CHIP CAP.	0.01uF	50V	B	GRM216B11H103KA01D	K22170817		1-	A	E7
C 5064	CHIP CAP.	0.1uF	25V	B	GRM188B11E104KA01D	K22144814		1-	A	D1
C 5065	CHIP CAP.	0.1uF	25V	B	GRM188B11E104KA01D	K22144814		1-	A	D1
C 5066	CHIP CAP.	0.1uF	25V	B	GRM21BB11E104KA01L	K22140811		1-	A	E7
C 5067	CHIP CAP.	0.01uF	50V	B	GRM188B11H103KA01D	K22174823		1-	A	D1
C 5068	CHIP CAP.	0.01uF	50V	B	GRM188B11H103KA01D	K22174823		1-	A	D1
C 5069	CHIP CAP.	0.1uF	25V	B	GRM21BB11E104KA01L	K22140811		1-	A	D6
C 5070	CHIP CAP.	0.01uF	50V	B	GRM188B11H103KA01D	K22174823		1-	A	D5
C 5071	CHIP CAP.	0.001uF	50V	B	GRM188B11H102KA01D	K22174821		1-	A	D1
C 5072	CHIP CAP.	0.001uF	50V	B	GRM188B11H102KA01D	K22174821		1-	A	E1
C 5073	AL.ELECTRO.CAP.	10uF	50V		RE2-50V100ME3#-T2	K46170021		1-	A	D1
C 5074	CHIP CAP.	0.01uF	50V	B	GRM188B11H103KA01D	K22174823		1-	A	D5
C 5075	CHIP CAP.	0.01uF	50V	B	GRM216B11H103KA01D	K22170817		1-	A	E6
C 5076	CHIP CAP.	0.0027uF	50V	B	GRM216B11H272KA01D	K22170810		1-	A	E6
C 5077	CHIP CAP.	0.0027uF	50V	B	GRM216B11H272KA01D	K22170810		1-	A	E6
C 5079	CHIP CAP.	0.001uF	50V	B	GRM216B11H102KA01D	K22170805		1-	A	E6
C 5080	AL.ELECTRO.CAP.	1000uF	25V		RE2-25V102MI5#	K40149034		1-	A	F5
C 5081	CHIP CAP.	0.01uF	50V	B	GRM216B11H103KA01D	K22170817		1-	A	E6
C 5082	CHIP CAP.	0.01uF	50V	B	GRM216B11H103KA01D	K22170817		1-	A	E6
C 5083	AL.ELECTRO.CAP.	10uF	50V		RE2-50V100ME3#-T2	K46170021		1-	A	E1
C 5084	CHIP CAP.	0.01uF	50V	B	GRM188B11H103KA01D	K22174823		1-	A	D5
C 5085	CHIP CAP.	0.01uF	50V	B	GRM216B11H103KA01D	K22170817		1-	A	F5
C 5086	CHIP CAP.	0.01uF	50V	B	GRM188B11H103KA01D	K22174823		1-	A	E1
C 5087	CHIP CAP.	0.001uF	50V	B	GRM188B11H102KA01D	K22174821		1-	A	D1
C 5088	CHIP CAP.	180pF	50V	CH	GRM2162C1H181JA01D	K22170241		1-	A	E6
C 5089	CHIP CAP.	0.001uF	50V	B	GRM216B11H102KA01D	K22170805		1-	A	F5
C 5090	AL.ELECTRO.CAP.	10uF	50V		RE2-50V100ME3#-T2	K46170021		1-	A	F5
C 5091	CHIP CAP.	0.1uF	25V	B	GRM21BB11E104KA01L	K22140811		1-	A	F5
C 5092	CHIP CAP.	0.001uF	50V	B	GRM188B11H102KA01D	K22174821		1-	A	E1
C 5093	CHIP CAP.	0.01uF	50V	B	GRM188B11H103KA01D	K22174823		1-	A	D1
C 5095	CHIP CAP.	0.1uF	25V	B	GRM188B11E104KA01D	K22144814		1-	A	E5
C 5096	CHIP CAP.	0.1uF	25V	B	GRM188B11E104KA01D	K22144814		1-	A	D1
C 5098	CHIP CAP.	0.001uF	50V	B	GRM216B11H102KA01D	K22170805		1-	A	E5
C 5099	CHIP CAP.	0.01uF	50V	B	GRM216B11H103KA01D	K22170817		1-	A	E5
C 5100	CHIP CAP.	0.1uF	25V	B	GRM21BB11E104KA01L	K22140811		1-	A	E5
C 5101	CHIP CAP.	0.1uF	25V	B	GRM21BB11E104KA01L	K22140811		1-	A	E5
C 5103	CHIP CAP.	0.01uF	50V	B	GRM188B11H103KA01D	K22174823		1-	A	E1

REF	DESCRIPTION	VALUE	V/W	TOL.	MFR'S DESIG	YAESU P/N	VERS.	LOT	SIDE	LAY ADR
C 5104	CHIP CAP.	0.01uF	50V	B	GRM188B11H103KA01D	K22174823		1-	A	F1
C 5105	CHIP CAP.	0.047uF	50V	B	GRM21BB11H473KA01L	K22170823		1-	A	D5
C 5106	CHIP CAP.	0.047uF	50V	B	GRM21BB11H473KA01L	K22170823		1-	A	E5
C 5107	CHIP CAP.	0.0068uF	50V	B	GRM216B11H682KA01D	K22170815		1-	A	D5
C 5108	CHIP CAP.	0.0068uF	50V	B	GRM216B11H682KA01D	K22170815		1-	A	E5
C 5109	CHIP CAP.	0.001uF	50V	B	GRM188B11H102KA01D	K22174821		1-	A	E1
C 5111	CHIP CAP.	0.01uF	50V	B	GRM188B11H103KA01D	K22174823		1-	A	D5
C 5114	CHIP CAP.	0.1uF	25V	B	GRM21BB11E104KA01L	K22140811		1-	A	E5
C 5117	CHIP CAP.	0.01uF	50V	B	GRM188B11H103KA01D	K22174823		1-	A	E1
C 5118	CHIP CAP.	0.01uF	50V	B	GRM188B11H103KA01D	K22174823		1-	A	E1
C 5119	AL.ELECTRO.CAP.	10uF	50V		RE2-50V100ME3#-T2	K46170021		1-	A	E1
C 5121	CHIP CAP.	0.1uF	25V	B	GRM21BB11E104KA01L	K22140811		1-	A	D5
C 5123	CHIP TA.CAP.	1uF	16V		TEESVA1C105M8R	K78120009		1-	A	E1
C 5127	CHIP CAP.	0.1uF	25V	B	GRM188B11E104KA01D	K22144814		1-	A	D5
C 5130	CHIP CAP.	0.01uF	50V	B	GRM188B11H103KA01D	K22174823		1-	A	E1
C 5131	CHIP CAP.	0.047uF	25V	B	GRM188B11E473KA01D	K22144811		1-	A	F3
C 5132	CERAMIC CAP.	0.0068uF	200V	SL	GRM55R1X2D682JV01L	K22236101		1-	A	E5
C 5133	CERAMIC CAP.	0.0068uF	200V	SL	GRM55R1X2D682JV01L	K22236101		1-	A	E5
C 5134	AL.ELECTRO.CAP.	100uF	25V		RE2-25V101MF3#-T2	K46140005		1-	A	F2
C 5135	CHIP CAP.	0.01uF	50V	B	GRM188B11H103KA01D	K22174823		1-	A	F3
C 5136	CHIP CAP.	0.01uF	50V	B	GRM188B11H103KA01D	K22174823		1-	A	E1
C 5137	CHIP CAP.	0.1uF	25V	B	GRM188B11E104KA01D	K22144814		1-	A	E1
C 5138	FILM CAP.	390pF	500V		UC342H3900J-T	K33279040		1-	A	E4
C 5139	FILM CAP.	330pF	500V		UC342H3300J-T	K33279014		1-	A	D4
C 5140	FILM CAP.	330pF	500V		UC342H3300J-T	K33279014		1-	A	E4
C 5141	CHIP CAP.	0.01uF	50V	B	GRM188B11H103KA01D	K22174823		1-	A	E1
C 5143	AL.ELECTRO.CAP.	1000uF	25V		RE2-25V102MI5#	K40149034		1-	A	D2
C 5144	AL.ELECTRO.CAP.	100uF	25V		RE2-25V101MF3#-T2	K46140005		1-	A	D2
C 5145	CHIP CAP.	0.047uF	25V	B	GRM188B11E473KA01D	K22144811		1-	A	F3
C 5146	CHIP CAP.	0.1uF	25V	B	GRM21BB11E104KA01L	K22140811		1-	A	F2
C 5147	CHIP CAP.	0.1uF	250V	X7R	GRM32DR72E104KW01L	K22245801		1-	A	D2
C 5148	CHIP CAP.	0.1uF	250V	X7R	GRM32DR72E104KW01L	K22245801		1-	A	E3
C 5149	CHIP CAP.	0.01uF	250V	X7R	GRM21BR72E103KW03L	K22240801		1-	A	D2
C 5150	CHIP CAP.	0.01uF	250V	X7R	GRM21BR72E103KW03L	K22240801		1-	A	D2
C 5151	CHIP CAP.	0.047uF	25V	B	GRM188B11E473KA01D	K22144811		1-	A	F3
C 5153	CHIP CAP.	0.001uF	25V	CH	GRM1882C1E102JA01D	K22144204		1-	A	F3
C 5155	CHIP CAP.	0.047uF	25V	B	GRM188B11E473KA01D	K22144811		1-	A	C2
C 5156	CHIP CAP.	0.047uF	25V	B	GRM188B11E473KA01D	K22144811		1-	A	C3
C 5157	CHIP CAP.	0.047uF	25V	B	GRM188B11E473KA01D	K22144811		1-	A	C7
C 5158	CHIP CAP.	0.047uF	25V	B	GRM188B11E473KA01D	K22144811		1-	A	C4
C 5159	CHIP CAP.	0.047uF	25V	B	GRM188B11E473KA01D	K22144811		1-	A	C6
C 5160	CHIP CAP.	0.047uF	25V	B	GRM188B11E473KA01D	K22144811		1-	A	C7
C 5161	CHIP CAP.	0.047uF	25V	B	GRM188B11E473KA01D	K22144811		1-	A	C5
C 5162	CHIP CAP.	0.1uF	25V	B	GRM188B11E104KA01D	K22144814		1-	A	E7
C 5163	CHIP CAP.	0.1uF	25V	B	GRM188B11E104KA01D	K22144814		1-	A	E7
C 5164	CHIP CAP.	0.1uF	25V	B	GRM188B11E104KA01D	K22144814		1-	A	E7
C 5165	CHIP CAP.	0.1uF	25V	B	GRM188B11E104KA01D	K22144814		1-	A	E8
C 5166	CHIP CAP.	0.01uF	50V	B	GRM188B11H103KA01D	K22174823		1-	A	E8
C 5167	CHIP CAP.	18pF	500V	CH	GQM22M5C2H180JB01L	K22273258		1-	A	C2
C 5168	CERAMIC CAP.	470pF	1KV	SL	CC45SL3AD471JYNNA	K00305471		1-	A	C3
C 5170	CHIP CAP.	0.1uF	25V	B	GRM188B11E104KA01D	K22144814		1-	A	E7
C 5171	CHIP CAP.	0.01uF	50V	B	GRM188B11H103KA01D	K22174823		1-	A	E7
C 5172	CERAMIC CAP.	0.001uF	1KV	SL	CC45SL3AD102JYNNA	K00305102		1-	A	C3
C 5173	CERAMIC CAP.	820pF	1KV	SL	CC45SL3AD821JYNNA	K00305821		1-	A	C6
C 5174	CERAMIC CAP.	390pF	1KV	SL	CC45SL3AD391JYVNA	K26300020		1-	A	C4
C 5175	CERAMIC CAP.	100pF	1KV	SL	CC45SL3AD101JYVNA	K26300013		1-	A	C5
C 5176	CERAMIC CAP.	100pF	1KV	SL	CC45SL3AD101JYVNA	K26300013		1-	A	C7
C 5177	CERAMIC CAP.	18pF	1KV	SL	CC45SL3AD180JYVNA	K26300004		1-	A	C4
C 5177	CERAMIC CAP.	56pF	1KV	SL	CC45SL3AD560JYVNA	K26300010		5-	A	C4
C 5178	CHIP CAP.	3pF	500V	CH	GQM22M5C2H3R0CB01L	K22273245		1-	A	C2
C 5179	CERAMIC CAP.	180pF	1KV	SL	CC45SL3AD181JYVNA	K26300016		1-	A	C3
C 5180	CERAMIC CAP.	120pF	1KV	SL	CC45SL3AD121JYVNA	K26300014		1-	A	B7
C 5181	CERAMIC CAP.	56pF	1KV	SL	CC45SL3AD560JYVNA	K26300010		1-	A	C4
C 5182	CERAMIC CAP.	150pF	1KV	SL	CC45SL3AD151JYVNA	K26300015		1-	A	C6
C 5182	CERAMIC CAP.	120pF	1KV	SL	CC45SL3AD121JYVNA	K26300014		5-	A	C6
C 5183	CERAMIC CAP.	47pF	1KV	SL	CC45SL3AD470JYVNA	K26300009		1-	A	C7
C 5184	CERAMIC CAP.	33pF	1KV	SL	CC45SL3AD330JYVNA	K26300007		1-	A	C4
C 5184	CERAMIC CAP.	47pF	1KV	SL	CC45SL3AD470JYVNA	K26300009		5-	A	C4
C 5185	CERAMIC CAP.	0.001uF	1KV	SL	CC45SL3AD102JYNNA	K00305102		1-	A	B3
C 5186	CERAMIC CAP.	560pF	1KV	SL	CC45SL3AD561JYNNA	K00305561		1-	A	B6
C 5187	CERAMIC CAP.	470pF	1KV	SL	CC45SL3AD471JYNNA	K00305471		1-	A	B3
C 5188	CERAMIC CAP.	150pF	1KV	SL	CC45SL3AD151JYVNA	K26300015		1-4	A	B5
C 5189	CERAMIC CAP.	120pF	1KV	SL	CC45SL3AD121JYVNA	K26300014		1-	A	B7

REF	DESCRIPTION	VALUE	V/W	TOL.	MFR'S DESIG	YAESU P/N	VERS.	LOT	SIDE	LAY ADR
C 5190	CERAMIC CAP.	68pF	1KV	SL	CC45SL3AD680JYVNA	K26300011		1-	A	B4
C 5190	CERAMIC CAP.	82pF	1KV	SL	CC45SL3AD820JYVNA	K26300012		5-	A	B4
C 5191	CHIP CAP.	0.01uF	50V	B	GRM188B11H103KA01D	K22174823		1-	A	F7
C 5192	CHIP CAP.	82pF	500V	CH	GQM22M5C2H820JB01L	K22273274		1-	A	C2
C 5193	CERAMIC CAP.	470pF	1KV	SL	CC45SL3AD471JYNNA	K00305471		1-	A	B3
C 5195	CERAMIC CAP.	0.001uF	1KV	SL	CC45SL3AD102JYNNA	K00305102		1-	A	B3
C 5196	CERAMIC CAP.	560pF	1KV	SL	CC45SL3AD561JYNNA	K00305561		1-	A	B6
C 5197	CERAMIC CAP.	330pF	1KV	SL	CC45SL3AD331JYVNA	K26300019		1-	A	B3
C 5198	CERAMIC CAP.	150pF	1KV	SL	CC45SL3AD151JYVNA	K26300015		1-	A	B5
C 5199	CERAMIC CAP.	120pF	1KV	SL	CC45SL3AD121JYVNA	K26300014		1-	A	B7
C 5200	CERAMIC CAP.	68pF	1KV	SL	CC45SL3AD680JYVNA	K26300011		1-	A	B4
C 5201	CHIP CAP.	0.01uF	50V	B	GRM188B11H103KA01D	K22174823		1-	A	F7
C 5202	CHIP CAP.	7pF	500V	CH	GQM22M5C2H7R0DB01L	K22273249		1-	A	B2
C 5203	CERAMIC CAP.	470pF	1KV	SL	CC45SL3AD471JYNNA	K00305471		1-	A	B3
C 5204	CERAMIC CAP.	390pF	1KV	SL	CC45SL3AD391JYVNA	K26300020		1-	A	B7
C 5205	CERAMIC CAP.	390pF	1KV	SL	CC45SL3AD391JYVNA	K26300020		1-	A	A4
C 5206	CERAMIC CAP.	68pF	1KV	SL	CC45SL3AD680JYVNA	K26300011		1-	A	B6
C 5206	CERAMIC CAP.	82pF	1KV	SL	CC45SL3AD820JYVNA	K26300012		5-	A	B6
C 5207	CERAMIC CAP.	18pF	1KV	SL	CC45SL3AD180JYVNA	K26300004		1-	A	B7
C 5208	CERAMIC CAP.	27pF	1KV	SL	CC45SL3AD270JYVNA	K26300006		1-	A	B5
C 5208	CERAMIC CAP.	22pF	1KV	SL	CC45SL3AD220JYVNA	K26300005		5-	A	B5
C 5209	CERAMIC CAP.	0.001uF	1KV	SL	CC45SL3AD102JYNNA	K00305102		1-	A	A3
C 5210	CERAMIC CAP.	470pF	1KV	SL	CC45SL3AD471JYNNA	K00305471		1-	A	A6
C 5211	CERAMIC CAP.	220pF	1KV	SL	CC45SL3AD221JYVNA	K26300017		1-	A	A4
C 5212	CERAMIC CAP.	82pF	1KV	SL	CC45SL3AD820JYVNA	K26300012		1-	A	B5
C 5212	CERAMIC CAP.	68pF	1KV	SL	CC45SL3AD680JYVNA	K26300011		5-	A	B5
C 5213	CERAMIC CAP.	120pF	1KV	SL	CC45SL3AD121JYVNA	K26300014		1-	A	B7
C 5214	CERAMIC CAP.	100pF	1KV	SL	CC45SL3AD101JYVNA	K26300013		1-	A	B4
C 5214	CERAMIC CAP.	150pF	1KV	SL	CC45SL3AD151JYVNA	K26300015		5-	A	B4
C 5215	CHIP CAP.	82pF	500V	CH	GQM22M5C2H820JB01L	K22273274		1-	A	B2
C 5216	CERAMIC CAP.	270pF	1KV	SL	CC45SL3AD271JYVNA	K26300018		1-	A	A3
C 5218	CERAMIC CAP.	270pF	1KV	SL	CC45SL3AD271JYVNA	K26300018		1-	A	B5
C 5218	CERAMIC CAP.	220pF	1KV	SL	CC45SL3AD221JYVNA	K26300017		5-	A	B5
C 5219	CERAMIC CAP.	150pF	1KV	SL	CC45SL3AD151JYVNA	K26300015		1-	A	A7
C 5220	CERAMIC CAP.	82pF	1KV	SL	CC45SL3AD820JYVNA	K26300012		1-	A	B4
C 5220	CERAMIC CAP.	47pF	1KV	SL	CC45SL3AD470JYVNA	K26300009		5-	A	B4
C 5221	CHIP CAP.	18pF	500V	CH	GQM22M5C2H180JB01L	K22273258		1-	A	A2
C 5222	CERAMIC CAP.	22pF	1KV	SL	CC45SL3AD220JYVNA	K26300005		1-	A	A6
C 5223	CERAMIC CAP.	9pF	500V	CH	CCDE050CH090D500	K02279074		1-	A	A7
C 5224	CERAMIC CAP.	22pF	1KV	SL	CC45SL3AD220JYVNA	K26300005		1-	A	B4
C 5224	CERAMIC CAP.	8pF	500V	CH	CD060CH080D500	K02279047		5-	A	B4
C 5225	CERAMIC CAP.	180pF	1KV	SL	CC45SL3AD181JYVNA	K26300016		1-	A	A5
C 5226	CERAMIC CAP.	68pF	1KV	SL	CC45SL3AD680JYVNA	K26300011		1-	A	A7
C 5227	CERAMIC CAP.	47pF	1KV	SL	CC45SL3AD470JYVNA	K26300009		1-	A	A4
C 5228	CERAMIC CAP.	56pF	1KV	SL	CC45SL3AD560JYVNA	K26300010		1-4	A	A4
C 5229	CERAMIC CAP.	82pF	1KV	SL	CC45SL3AD820JYVNA	K26300012		1-	A	A7
C 5230	CHIP CAP.	39pF	500V	CH	GQM22M5C2H390JB01L	K22273266		1-	A	A2
C 5231	CHIP CAP.	0.01uF	50V	B	GRM188B11H103KA01D	K22174823		1-	A	F7
C 5232	CHIP CAP.	0.047uF	25V	B	GRM188B11E473KA01D	K22144811		1-	A	A2
C 5233	CHIP CAP.	0.047uF	25V	B	GRM188B11E473KA01D	K22144811		1-	A	A3
C 5234	CHIP CAP.	0.047uF	25V	B	GRM188B11E473KA01D	K22144811		1-	A	A6
C 5235	CHIP CAP.	0.047uF	25V	B	GRM188B11E473KA01D	K22144811		1-	A	A4
C 5236	CHIP CAP.	0.047uF	25V	B	GRM188B11E473KA01D	K22144811		1-	A	A6
C 5237	CHIP CAP.	0.047uF	25V	B	GRM188B11E473KA01D	K22144811		1-	A	A7
C 5238	CHIP CAP.	0.047uF	25V	B	GRM188B11E473KA01D	K22144811		1-	A	A5
C 5239	AL.ELECTRO.CAP.	47uF	25V		RE2-25V470ME3#-T2	K46140004		1-	A	F7
C 5240	CHIP CAP.	0.01uF	50V	B	GRM188B11H103KA01D	K22174823		1-	A	F7
C 5241	FILM CAP.	390pF	500V		UC342H3900J-T	K33279040		1-	A	E4
C 5242	CHIP CAP.	100pF	50V	CH	GRM2162C1H101JA01D	K22170235		1-	A	E5
C 5243	CHIP CAP.	56pF	50V	CH	GRM2162C1H560JZ01D	K22170229		1-	A	E5
C 5244	CHIP CAP.	100pF	50V	CH	GRM2162C1H101JA01D	K22170235		1-	A	E5
C 5245	CERAMIC CAP.	150pF	1KV	SL	CC45SL3AD151JYVNA	K26300015		1-	A	B3
C 5246	CERAMIC CAP.	180pF	1KV	SL	CC45SL3AD181JYVNA	K26300016		1-	A	B4
C 5247	CERAMIC CAP.	180pF	1KV	SL	CC45SL3AD181JYVNA	K26300016		1-	A	B3
C 5248	CERAMIC CAP.	47pF	1KV	SL	CC45SL3AD470JYVNA	K26300009		1-	A	B7
C 5249	CERAMIC CAP.	33pF	1KV	SL	CC45SL3AD330JYVNA	K26300007		1-	A	A4
C 5252	CHIP CAP.	0.1uF	25V	B	GRM188B11E104KA01D	K22144814		1-	A	D7
C 5253	AL.ELECTRO.CAP.	10uF	50V		RE2-50V100ME3#-T2	K46170021		1-	A	D7
D 5001	DIODE				BAS316	G2070716		1-	A	C7
D 5002	DIODE				RB051L-40TE25	G2070718		1-	A	D1
D 5003	DIODE				RB051L-40TE25	G2070718		1-	A	D1
D 5004	DIODE				RSX101VA-30TR	G2070984		1-	A	E1
D 5005	DIODE				BAS316	G2070716		1-	A	E1

REF	DESCRIPTION	VALUE	V/W	TOL.	MFR'S DESIG	YAESU P/N	VERS.	LOT	SIDE	LAY ADR
D 5006	DIODE				DAN202U T106	G2070162		1-	A	F5
D 5007	DIODE				DAN202U T106	G2070162		1-	A	D5
D 5008	DIODE				BAS316	G2070716		1-	A	D2
D 5009	DIODE				BAS316	G2070716		1-	A	C3
D 5010	DIODE				BAS316	G2070716		1-	A	C6
D 5011	DIODE				BAS316	G2070716		1-	A	C4
D 5012	DIODE				BAS316	G2070716		1-	A	C6
D 5013	DIODE				BAS316	G2070716		1-	A	C7
D 5014	DIODE				BAS316	G2070716		1-	A	C5
J 5001	CONNECTOR				TMP-J01X-V6	P1090210		1-	A	F7
J 5002	CONNECTOR				30FLT-SM2-TB(LF)(SN)(M)	P1091142		1-	A	D7
J 5003	CONNECTOR				IMSA-9202B-1-02-T	P0091174		1-	A	F6
J 5004	CONNECTOR				SC25-08WS	P0090627		1-	A	E1
J 5005	CONNECTOR				IMSA-9202B-1-02-T	P0091174		1-	A	F5
J 5006	CONNECTOR				B3B-XH-A(LF)(SN)	P0091413		1-	A	F7
J 5007	CONNECTOR				TMP-J01X-V6	P1090210		1-	A	A2
J 5008	TERMINAL				P07	Q5000166		1-	A	E2
J 5009	TERMINAL				P07	Q5000166		1-	A	E2
L 5001	CHIP COIL	39uH		5%	NLV25T-390J-PF	L1691443		1-	A	E7
L 5002	CHIP RES.	0	1/4W	5%	RMC1/4 000JATP	J24245000		1-	A	E7
L 5003	M.RFC	10uH			LLM3225-100J	L1691133		1-	A	E7
L 5004	M.RFC	47uH			LLM3225-470J	L1691141		1-	A	E6
L 5005	M.RFC	47uH			LLM3225-470J	L1691141		1-	A	E6
L 5006	RFC WITH BEADS				CB6A916240	L1020736		1-	A	F5
L 5007	TOROIDAL COIL	6uH			U 6H3 10X5X5	L0022039		1-	A	E4
L 5008	RFC WITH BEADS				3A RI5.8X6.4-2	L1020732		1-	A	D2
L 5009	COIL A1				3.5T11D1.6PEW R	L0023114		1-	A	C2
L 5010	TOROIDAL COIL	4.41uH			4.41U 27T T68-2	L0023128		1-	A	C3
L 5011	TOROIDAL COIL	1.74uH			1.74U 18T T50-2	L0023130		1-	A	B6
L 5012	TOROIDAL COIL	1.13uH			1.13U 16T T50-6	L0023132		1-	A	C4
L 5013	TOROIDAL COIL	0.364uH			0.364U 9T T50-6	L0023136		1-	A	C5
L 5014	COIL A1				5.5T12D1.2PEW R	L0023119		1-	A	C7
L 5015	COIL A1				4.5T10D1.2PEW R	L0023117		1-	A	C5
L 5016	COIL A1				3.5T11D1.6PEW R	L0023114		1-	A	B2
L 5017	TOROIDAL COIL	3.46uH			3.46U 24T T68-2	L0023129		1-	A	B3
L 5018	TOROIDAL COIL	1.12uH			1.12U 14T T50-2	L0023131		1-	A	B6
L 5019	TOROIDAL COIL	0.563uH			0.563U 11T T50-6	L0023135		1-	A	A4
L 5020	TOROIDAL COIL	0.563uH			0.563U 11T T50-6	L0023135		1-	A	B5
L 5021	COIL A1				6.5T12D1.2PEW R	L0023118		1-	A	B7
L 5022	COIL A1				4.5T12D1.2PEW R	L0023116		1-	A	B5
L 5023	COIL A1				2.5T13D1.6PEW R	L0023115		1-	A	B2
L 5024	TOROIDAL COIL	0.651uH			0.651U 12T T50-6	L0023134		1-	A	A5
L 5025	COIL A1				6.5T12D1.2PEW R	L0023118		1-	A	A7
L 5026	COIL A1				4.5T12D1.2PEW R	L0023116		1-	A	B5
L 5027	COIL	0.056uH			TAS0806-56NK	L0023105		1-	A	D5
L 5028	COIL	0.056uH			TAS0806-56NK	L0023105		1-	A	F5
L 5029	TOROIDAL COIL	0.971uH			0.971U 15T T50-6	L0023133		1-	A	B4
P 5001	CONNECTOR				IMSA-9206H-T	P1090988		1-		
P 5002	CONNECTOR				IMSA-9206H-T	P1090988		1-		
P 5003	WIRE ASSY				AH025H 110MM	T9207317		1-		
P 5004	TERMINAL				H101	S5000331		1-		
Q 5001	IC				LM20BIM7	G1094585		1-	A	C4
Q 5002	IC				M5223AFP 600C	G1092955		1-	A	D8
Q 5003	FET				RD06HHF1-01	G3090145		1-	A	D7
Q 5004	IC				M5223AFP 600C	G1092955		1-	A	D6
Q 5005	IC				PQ090DNA1ZPH	G1094988		1-	A	C7
Q 5006	FET				RD06HHF1-01	G3090145		1-	A	D6
Q 5007	FET				RD06HHF1-01	G3090145		1-	A	F6
Q 5008	IC				M5223AFP 600C	G1092955		1-	A	D5
Q 5009	IC				PQ090RDA2SZH	G1094987		1-	A	F1
Q 5010	TRANSISTOR				UMD5N TR	G3070343		1-	A	D1
Q 5011	IC				M5223AFP 600C	G1092955		1-	A	E7
Q 5012	IC				M5218AFP-600C	G1091607		1-	A	F3
Q 5013	FET				RD100HHF1-101	G3090151		1-	A	D4
Q 5014	FET				RD100HHF1-101	G3090151		1-	A	F4
Q 5015	TRANSISTOR				DTC123JE TL	G3070323		1-	A	E1
Q 5017	TRANSISTOR				DTD123YK T146	G3070157		1-	A	E8
Q 5018	TRANSISTOR				2SC4081 T106	G3340818		1-	A	F7
Q 5019	TRANSISTOR				2SB1182-TLQ	G3070063		1-	A	F8
Q 5020	TRANSISTOR				UMD5N TR	G3070343		1-	A	D7
Q 5021	TRANSISTOR				UMD5N TR	G3070343		1-	A	C7
Q 5022	TRANSISTOR				UMD5N TR	G3070343		1-	A	D7
Q 5023	TRANSISTOR				UMD5N TR	G3070343		1-	A	D7

REF	DESCRIPTION	VALUE	V/W	TOL.	MFR'S DESIG	YAESU P/N	VERS.	LOT	SIDE	LAY ADR
Q 5024	TRANSISTOR				UMD5N TR	G3070343		1-	A	D7
Q 5025	TRANSISTOR				UMD5N TR	G3070343		1-	A	D7
Q 5026	TRANSISTOR				UMD5N TR	G3070343		1-	A	D7
R 5001	CHIP RES.	330	1/16W	5%	RMC1/16 331JATP	J24185331		1-	A	F7
R 5002	CHIP RES.	18	1/16W	5%	RMC1/16 180JATP	J24185180		1-	A	E7
R 5003	CHIP RES.	0	1/16W	5%	RMC1/16 000JATP	J24185000		1-	A	D8
R 5005	CHIP RES.	100k	1/16W	5%	RMC1/16 104JATP	J24185104		1-	A	D7
R 5006	CHIP RES.	3.9k	1/16W	5%	RMC1/16 392JATP	J24185392		1-	A	D8
R 5007	CHIP RES.	1k	1/16W	5%	RMC1/16 102JATP	J24185102		1-	A	D8
R 5008	CHIP RES.	330	1/16W	5%	RMC1/16 331JATP	J24185331		1-	A	E7
R 5009	CHIP RES.	3.9k	1/16W	5%	RMC1/16 392JATP	J24185392		1-	A	E8
R 5010	CHIP RES.	15k	1/16W	5%	RMC1/16 153JATP	J24185153		1-	A	D8
R 5011	CHIP RES.	100k	1/16W	5%	RMC1/16 104JATP	J24185104		1-	A	E8
R 5012	CHIP RES.	100k	1/16W	5%	RMC1/16 104JATP	J24185104		1-	A	D7
R 5013	CHIP RES.	820	1/16W	5%	RMC1/16 821JATP	J24185821		1-	A	E7
R 5014	CHIP RES.	470	1/16W	5%	RMC1/16 471JATP	J24185471		1-	A	C4
R 5015	CHIP RES.	10k	1/16W	5%	RMC1/16 103JATP	J24185103		1-	A	E8
R 5016	CHIP RES.	220	1/4W	5%	RMC1/4 221JATP	J24245221		1-	A	E7
R 5017	CHIP RES.	1.8k	1/16W	5%	RMC1/16 182JATP	J24185182		1-	A	E7
R 5017	CHIP RES.	3.3k	1/16W	5%	RMC1/16 332JATP	J24185332		4-	A	E7
R 5018	CHIP RES.	100k	1/16W	5%	RMC1/16 104JATP	J24185104		1-	A	E7
R 5019	CHIP RES.	0	1/16W	5%	RMC1/16 000JATP	J24185000		1-	A	C4
R 5020	CHIP RES.	330	1/2W	5%	RMC1/2 331JCTP	J24275331		1-	A	E8
R 5022	CHIP RES.	10k	1/16W	5%	RMC1/16 103JATP	J24185103		1-	A	D7
R 5023	CHIP RES.	220	1/4W	5%	RMC1/4 221JATP	J24245221		1-	A	E7
R 5025	CHIP RES.	0	1/16W	5%	RMC1/16 000JATP	J24185000		1-	A	D6
R 5027	CHIP RES.	0	1/16W	5%	RMC1/16 000JATP	J24185000		1-	A	D7
R 5028	CHIP RES.	100k	1/16W	5%	RMC1/16 104JATP	J24185104		1-	A	D6
R 5030	CHIP RES.	100k	1/16W	5%	RMC1/16 104JATP	J24185104		1-	A	D7
R 5031	CHIP RES.	2.7k	1/16W	5%	RMC1/16 272JATP	J24185272		1-	A	D6
R 5032	CHIP RES.	2.7k	1/16W	5%	RMC1/16 272JATP	J24185272		1-	A	D6
R 5033	CHIP RES.	100k	1/16W	5%	RMC1/16 104JATP	J24185104		1-	A	D6
R 5034	CHIP RES.	100k	1/16W	5%	RMC1/16 104JATP	J24185104		1-	A	D6
R 5034	CHIP RES.	68k	1/16W	5%	RMC1/16 683JATP	J24185683		4-	A	D6
R 5035	CHIP RES.	100k	1/16W	5%	RMC1/16 104JATP	J24185104		1-	A	D6
R 5036	CHIP RES.	100k	1/16W	5%	RMC1/16 104JATP	J24185104		1-	A	D7
R 5036	CHIP RES.	68k	1/16W	5%	RMC1/16 683JATP	J24185683		4-	A	D7
R 5037	CHIP RES.	10k	1/16W	5%	RMC1/16 103JATP	J24185103		1-	A	D6
R 5038	CHIP RES.	10k	1/16W	5%	RMC1/16 103JATP	J24185103		1-	A	D6
R 5039	CHIP RES.	100k	1/16W	5%	RMC1/16 104JATP	J24185104		1-	A	D7
R 5040	CHIP RES.	100k	1/16W	5%	RMC1/16 104JATP	J24185104		1-	A	D6
R 5041	CHIP RES.	100	1/16W	5%	RMC1/16 101JATP	J24185101		1-	A	D6
R 5043	CHIP RES.	10k	1/16W	5%	RMC1/16 103JATP	J24185103		1-	A	D6
R 5044	CHIP RES.	10k	1/16W	5%	RMC1/16 103JATP	J24185103		1-	A	D7
R 5046	CHIP RES.	100	1/16W	5%	RMC1/16 101JATP	J24185101		1-	A	D7
R 5047	CHIP RES.	2.7k	1/16W	5%	RMC1/16 272JATP	J24185272		1-	A	D5
R 5050	CHIP RES.	0	1/16W	5%	RMC1/16 000JATP	J24185000		1-	A	D5
R 5051	CHIP RES.	220	1/16W	5%	RMC1/16 221JATP	J24185221		1-	A	C5
R 5052	CHIP RES.	100k	1/16W	5%	RMC1/16 104JATP	J24185104		1-	A	D5
R 5053	CHIP RES.	1.5	1/2W	5%	RMC1/2 1R5JCTP	J24275159		1-	A	E6
R 5054	CHIP RES.	1.5	1/2W	5%	RMC1/2 1R5JCTP	J24275159		1-	A	E6
R 5056	CHIP RES.	0	1/10W	5%	RMC1/10T 000J	J24205000		1-	A	E6
R 5057	CHIP RES.	0	1/10W	5%	RMC1/10T 000J	J24205000		1-	A	E6
R 5058	CHIP RES.	100k	1/16W	5%	RMC1/16 104JATP	J24185104		1-	A	C5
R 5059	CHIP RES.	100k	1/16W	5%	RMC1/16 104JATP	J24185104		1-	A	D5
R 5060	CHIP RES.	10k	1/16W	5%	RMC1/16 103JATP	J24185103		1-	A	D5
R 5061	CHIP RES.	220	1W	5%	RMC1 221JTE	J24305221		1-	A	E6
R 5062	CHIP RES.	1k	1/10W	5%	RMC1/10T 102J	J24205102		1-	A	E6
R 5063	CHIP RES.	1k	1/10W	5%	RMC1/10T 102J	J24205102		1-	A	E6
R 5064	CHIP RES.	220	1W	5%	RMC1 221JTE	J24305221		1-	A	E6
R 5065	CHIP RES.	100k	1/16W	5%	RMC1/16 104JATP	J24185104		1-	A	D5
R 5066	CHIP RES.	10k	1/16W	5%	RMC1/16 103JATP	J24185103		1-	A	D5
R 5067	CHIP RES.	100	1/10W	5%	RMC1/10T 101J	J24205101		1-	A	D5
R 5068	CHIP RES.	0	1/16W	5%	RMC1/16 000JATP	J24185000		1-	A	E1
R 5070	CHIP RES.	100	1/10W	5%	RMC1/10T 101J	J24205101		1-	A	E5
R 5071	CHIP RES.	0	1/16W	5%	RMC1/16 000JATP	J24185000		1-	A	C5
R 5072	CHIP RES.	0	1/16W	5%	RMC1/16 000JATP	J24185000		1-	A	C5
R 5073	CHIP RES.	100k	1/16W	5%	RMC1/16 104JATP	J24185104		1-	A	C5
R 5077	CHIP RES.	100k	1/16W	5%	RMC1/16 104JATP	J24185104		1-	A	C5
R 5078	CHIP RES.	100k	1/16W	5%	RMC1/16 104JATP	J24185104		1-	A	D5
R 5079	CHIP RES.	0	1W	5%	RMC1 JPATE	J24305000		1-	A	D5
R 5081	CHIP RES.	0	1W	5%	RMC1 JPATE	J24305000		1-	A	E5
R 5083	CHIP RES.	10k	1/16W	5%	RMC1/16 103JATP	J24185103		1-	A	D5

REF	DESCRIPTION	VALUE	V/W	TOL.	MFR'S DESIG	YAESU P/N	VERS.	LOT	SIDE	LAY ADR
R 5084	CHIP RES.	1	1W	5%	RMC1 1R0JTE	J24305010		1-	A	D5
R 5085	CHIP RES.	1	1W	5%	RMC1 1R0JTE	J24305010		1-	A	F5
R 5087	CHIP RES.	100k	1/16W	5%	RMC1/16 104JATP	J24185104		1-	A	D5
R 5088	CHIP RES.	22	1W	5%	RMC1 220JTE	J24305220		1-	A	F5
R 5090	CHIP RES.	10k	1/16W	5%	RMC1/16 103JATP	J24185103		1-	A	D5
R 5091	CHIP RES.	100	1/10W	5%	RMC1/10T 101J	J24205101		1-	A	D5
R 5092	CHIP RES.	22	1W	5%	RMC1 220JTE	J24305220		1-	A	D5
R 5097	CHIP RES.	10	1W	5%	RMC1 100JTE	J24305100		1-	A	D5
R 5098	CHIP RES.	10	1W	5%	RMC1 100JTE	J24305100		1-	A	E5
R 5099	CHIP RES.	100	1/10W	5%	RMC1/10T 101J	J24205101		1-	A	D5
R 5100	CHIP RES.	1k	1/4W	5%	RMC1/4 102JATP	J24245102		1-	A	D4
R 5101	CHIP RES.	1k	1/4W	5%	RMC1/4 102JATP	J24245102		1-	A	E4
R 5103	CHIP RES.	10	1W	5%	RMC1 100JTE	J24305100		1-	A	D5
R 5104	CHIP RES.	10	1W	5%	RMC1 100JTE	J24305100		1-	A	E5
R 5105	SHUNT RES.	0.006		5%	R006J	J32009019		1-	A	E1
R 5106	CHIP RES.	6.8k	1/10W	0.1%	RR1220P-682-B	J24209094		1-	A	F3
R 5107	CHIP RES.	6.8k	1/10W	0.1%	RR1220P-682-B	J24209094		1-	A	F3
R 5108	CHIP RES.	5.6k	1/10W	0.1%	RR1220P-562-B	J24209092		1-	A	F3
R 5109	CHIP RES.	5.6k	1/10W	0.1%	RR1220P-562-B	J24209092		1-	A	F3
R 5110	CHIP RES.	5.6k	1/16W	0.1%	RN731JTTD5601B25	J24189409		1-	A	F3
R 5111	CHIP RES.	5.6k	1/16W	0.1%	RN731JTTD5601B25	J24189409		1-	A	F3
R 5112	CHIP RES.	390k	1/10W	0.5%	RR1220R-394-D-T5	J24209233		1-	A	F3
R 5113	CHIP RES.	390k	1/10W	0.5%	RR1220R-394-D-T5	J24209233		1-	A	F3
R 5114	CHIP RES.	1k	1/16W	5%	RMC1/16 102JATP	J24185102		1-	A	E7
R 5115	CHIP RES.	2.7k	1/16W	1%	RMC1/16 272FTP	J24183272		1-	A	E7
R 5116	CHIP RES.	10k	1/16W	1%	RMC1/16 103FTP	J24183103		1-	A	E8
R 5117	CHIP RES.	10k	1/16W	5%	RMC1/16 103JATP	J24185103		1-	A	E7
R 5118	CHIP RES.	10k	1/16W	5%	RMC1/16 103JATP	J24185103		1-	A	E7
R 5119	CHIP RES.	470k	1/16W	5%	RMC1/16 474JATP	J24185474		1-	A	E7
R 5120	CHIP RES.	2.2k	1/16W	5%	RMC1/16 222JATP	J24185222		1-	A	E7
R 5121	CHIP RES.	1k	1/16W	1%	RMC1/16 102FTP	J24183102		1-	A	F7
R 5122	CHIP RES.	5.6k	1/16W	1%	RMC1/16 562FTP	J24183562		1-	A	F7
R 5123	CHIP RES.	4.7k	1/16W	5%	RMC1/16 472JATP	J24185472		1-	A	F7
R 5124	CHIP RES.	1	1/4W	5%	RMC1/4 1R0JATP	J24245010		1-	A	F8
R 5125	CHIP RES.	0	1/10W	5%	RMC1/10T 000J	J24205000		1-	A	D5
R 5126	CHIP RES.	0	1/10W	5%	RMC1/10T 000J	J24205000		1-	A	F5
R 5127	CHIP RES.	0	1/16W	5%	RMC1/16 000JATP	J24185000		1-	A	F7
R 5128	CHIP RES.	47	1/16W	5%	RMC1/16 470JATP	J24185470		1-	A	D7
R 5129	CHIP RES.	47	1/16W	5%	RMC1/16 470JATP	J24185470		1-	A	C7
R 5130	CHIP RES.	47	1/16W	5%	RMC1/16 470JATP	J24185470		1-	A	C7
R 5131	CHIP RES.	47	1/16W	5%	RMC1/16 470JATP	J24185470		1-	A	C7
R 5132	CHIP RES.	47	1/16W	5%	RMC1/16 470JATP	J24185470		1-	A	C7
R 5133	CHIP RES.	47	1/16W	5%	RMC1/16 470JATP	J24185470		1-	A	C7
R 5134	CHIP RES.	47	1/16W	5%	RMC1/16 470JATP	J24185470		1-	A	C7
RL5001	RELAY		DC12V		ACP331 DC12V	M1190175		1-	A	D1
RL5002	RELAY		DC12V		FTR-B4SA012Z-B05	M1190209		1-	A	C3
RL5003	RELAY		DC12V		FTR-B4SA012Z-B05	M1190209		1-	A	C6
RL5004	RELAY		DC12V		FTR-B4SA012Z-B05	M1190209		1-	A	C7
RL5005	RELAY		DC12V		FTR-B4SA012Z-B05	M1190209		1-	A	C5
RL5006	RELAY		DC12V		FTR-B4SA012Z-B05	M1190209		1-	A	C2
RL5007	RELAY		DC12V		FTR-B4SA012Z-B05	M1190209		1-	A	C6
RL5008	RELAY		DC12V		FTR-B4SA012Z-B05	M1190209		1-	A	C4
RL5009	RELAY		DC12V		FTR-B4SA012Z-B05	M1190209		1-	A	A3
RL5010	RELAY		DC12V		FTR-B4SA012Z-B05	M1190209		1-	A	A7
RL5011	RELAY		DC12V		FTR-B4SA012Z-B05	M1190209		1-	A	A2
RL5012	RELAY		DC12V		FTR-B4SA012Z-B05	M1190209		1-	A	A6
RL5013	RELAY		DC12V		FTR-B4SA012Z-B05	M1190209		1-	A	A4
RL5014	RELAY		DC12V		FTR-B4SA012Z-B05	M1190209		1-	A	A6
RL5015	RELAY		DC12V		FTR-B4SA012Z-B05	M1190209		1-	A	A5
T 5001	TOROIDAL COIL				EQ2M 16X8X8	L0023120		1-	A	C1
T 5002	COIL 10WIDE				BC-278	L0022857		1-	A	E6
T 5003	COIL PWR-WIDE				D12A1T RIB10	L0023112		1-	A	E5
T 5004	COIL PWR-WIDE				4D4 RIB16	L0023113		1-	A	E3
	SHIELD CASE					R0131670A		1-		
	SHIELD CASE COVER					R0131680		1-		

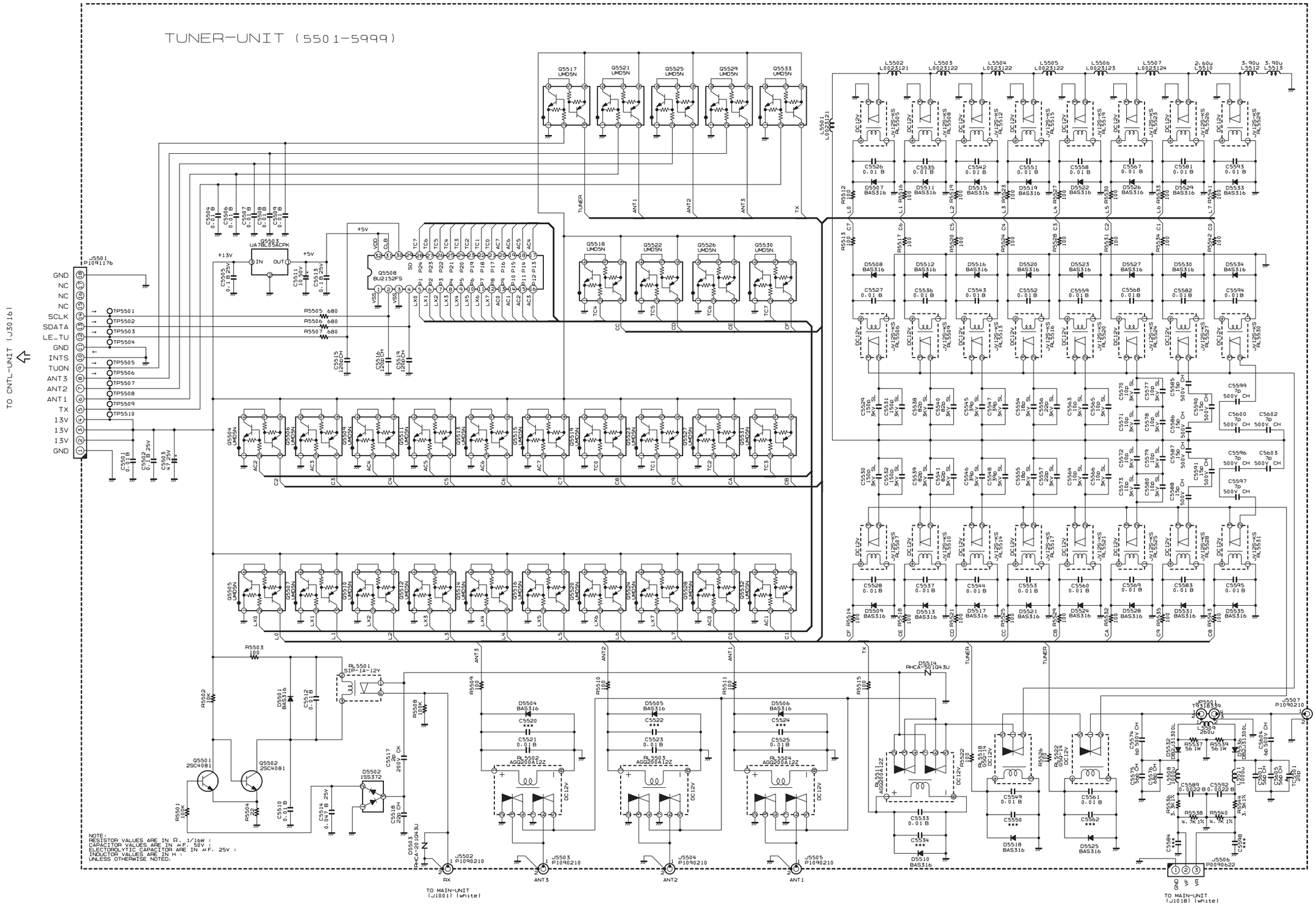
TUNER-UNIT (5501-5999)
TO CNTL-UNIT (J3016)
GND
NC
NC
NC
SCLK
SDATA
LE_TU
GND
INTS
TUON
ANT3
ANT2
ANT1
TX
13V
13V
13V
GND
TO PA-UNIT (J5007)
TO MAIN-UNIT (J1001) (white)
TO MAIN-UNIT (J1018) (white)
NOTE:
RESISTOR VALUES ARE IN Ω, 1/16W ;
CAPACITOR VALUES ARE IN μF, 50V ;
ELECTROLYTIC CAPACITOR ARE IN μF, 25V ;
INDUCTOR VALUES ARE IN H ;
UNLESS OTHERWISE NOTED.

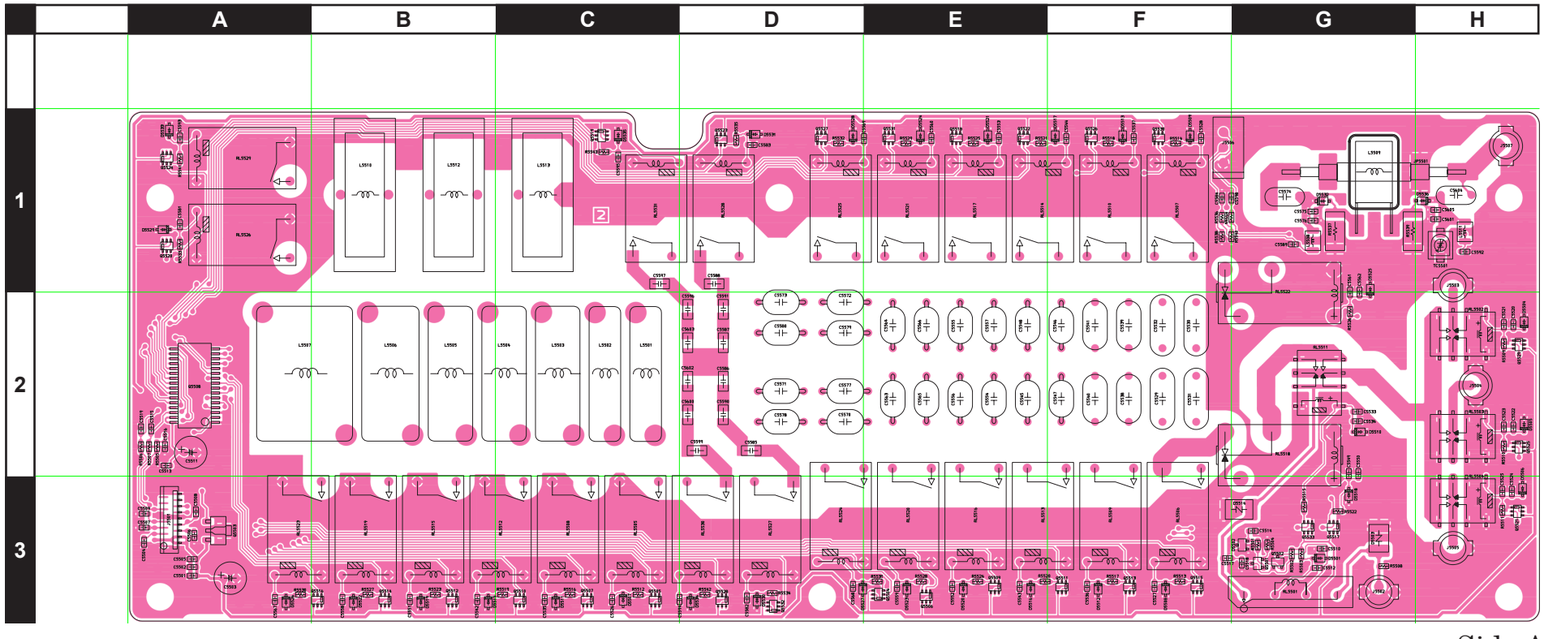

Side A

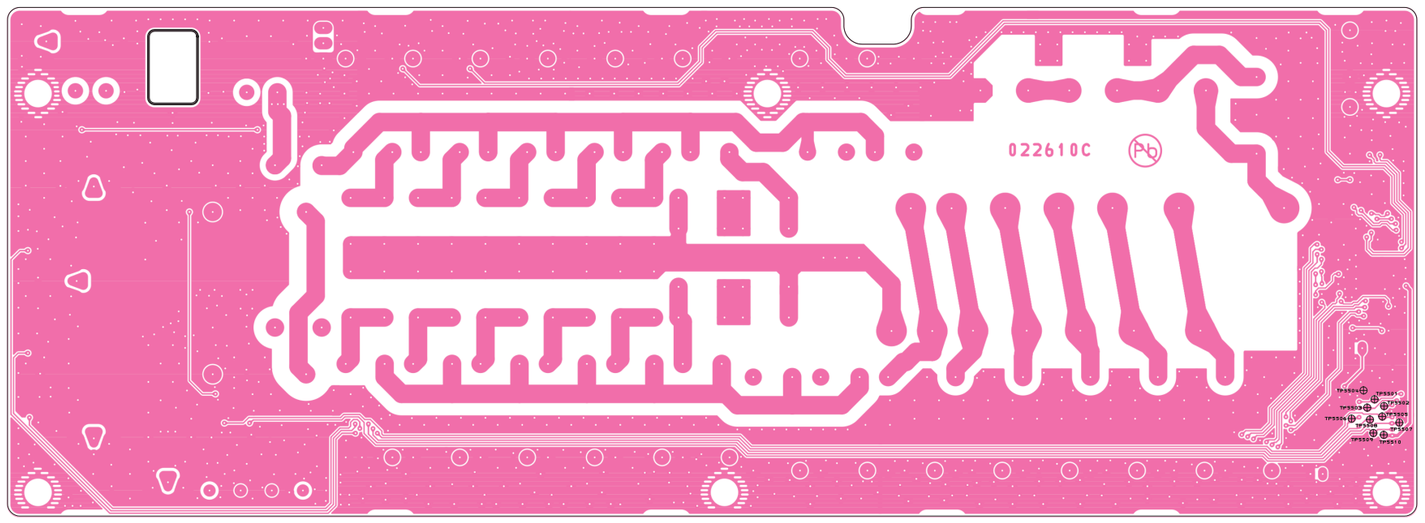

Side B

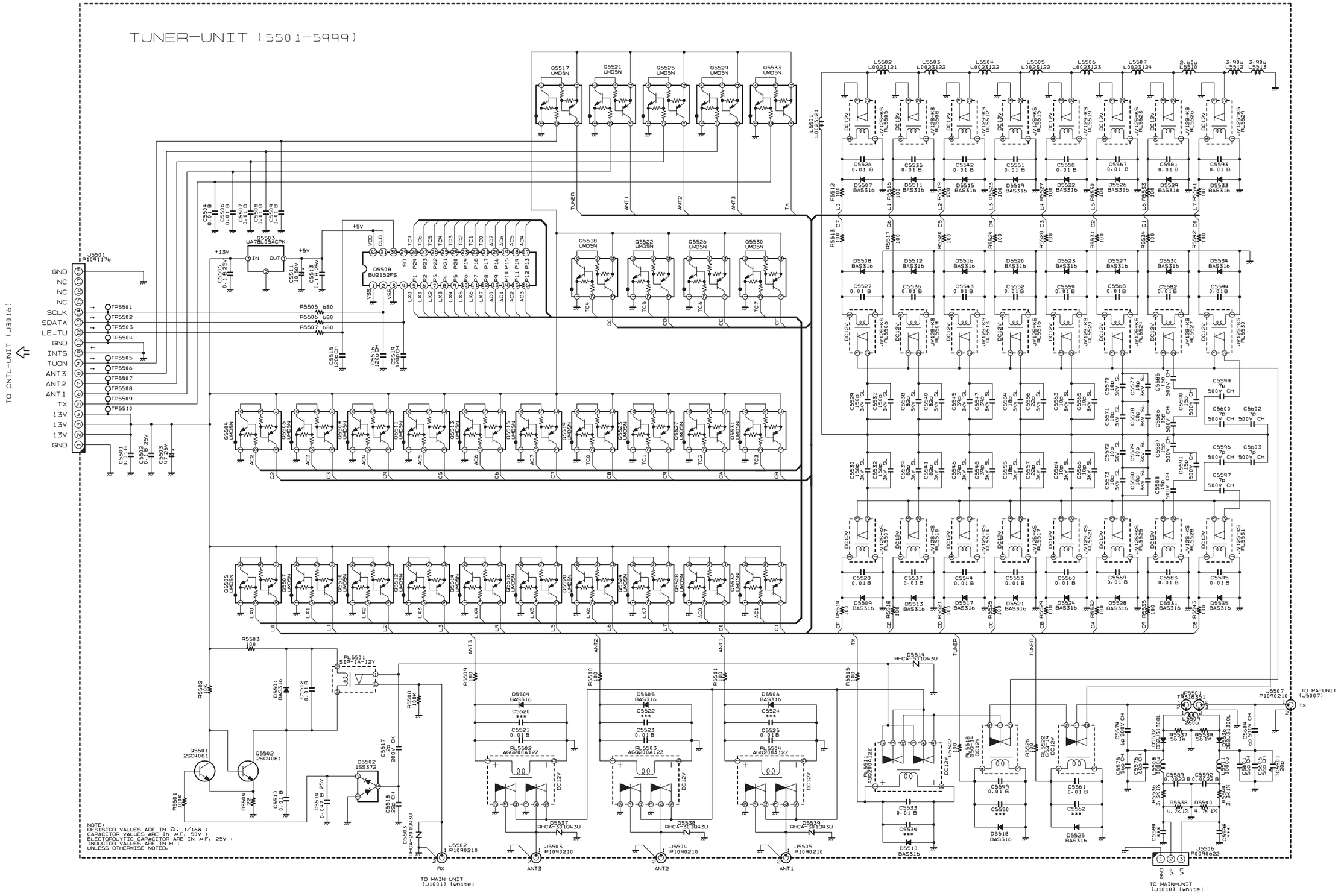
TUNER-UNIT (5501-5999)
TO CNTL-UNIT (J3016)
GND
NC
NC
NC
SCLK
SDATA
LE_TU
GND
INTS
TUON
ANT3
ANT2
ANT1
TX
13V
13V
13V
GND
TO MAIN-UNIT (J1001) (white)
TO MAIN-UNIT (J1018) (white)
TO PA-UNIT (J5007)
NOTE:
RESISTOR VALUES ARE IN Ω, 1/16W ;
CAPACITOR VALUES ARE IN μF, 50V ;
ELECTOROLYTIC CAPACITOR ARE IN μF, 25V ;
INDUCTOR VALUES ARE IN H ;
UNLESS OTHERWISE NOTED.

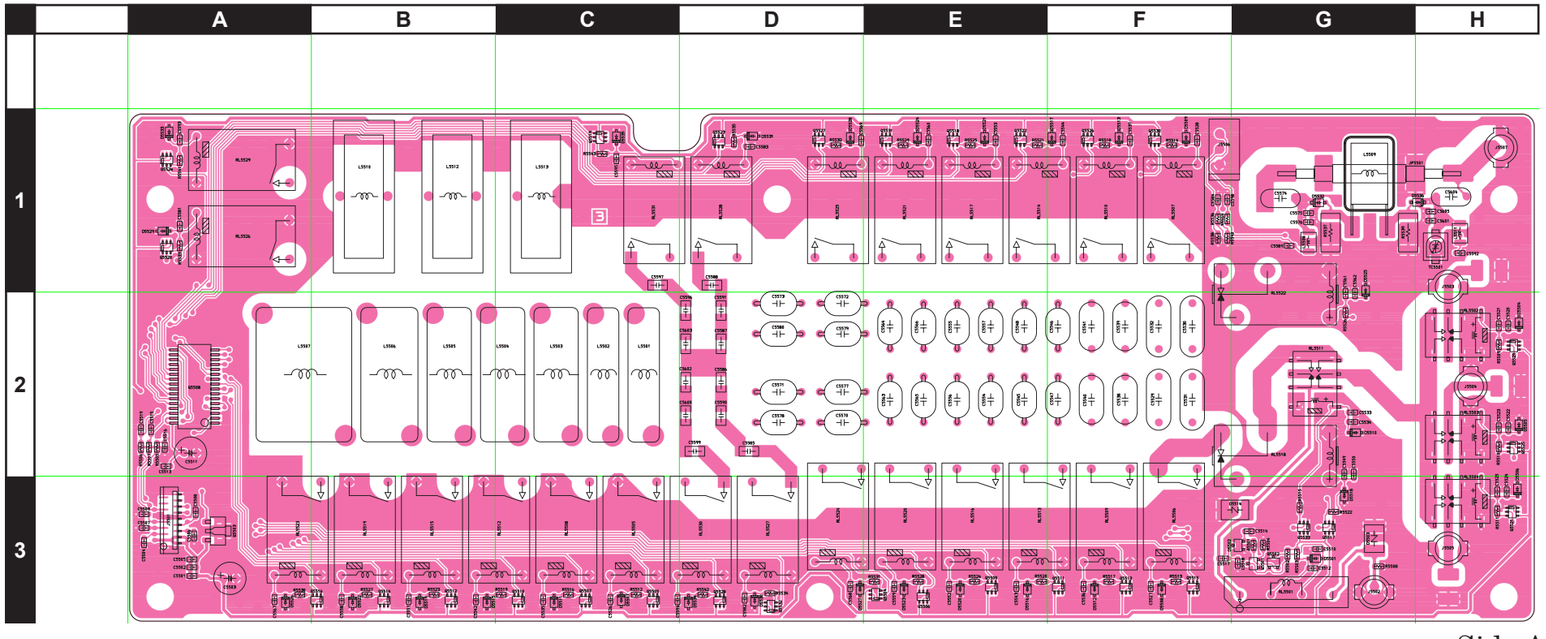

Side A

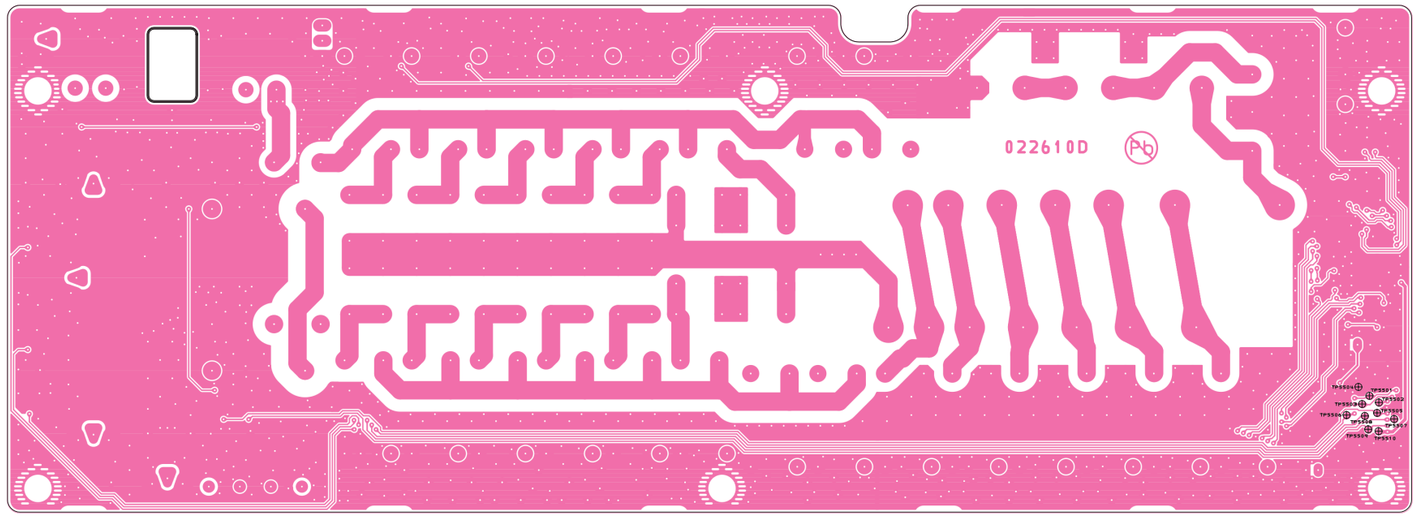

Side B

REF	DESCRIPTION	VALUE	V/W	TOL.	MFR'S DESIG	YAESU P/N	VERS.	LOT	SIDE	LAY ADR
	PCB with Components					CS2184701				
C 5501	CHIP CAP.	0.01uF	50V	B	GRM188B11H103KA01D	K22174823		1-	A	A3
C 5502	CHIP CAP.	0.1uF	25V	B	GRM188B11E104KA01D	K22144814		1-	A	A3
C 5503	AL.ELECTRO.CAP.	47uF	25V		RE2-25V470ME3#	K40149035		1-	A	A3
C 5504	CHIP CAP.	0.01uF	50V	B	GRM188B11H103KA01D	K22174823		1-	A	A3
C 5505	CHIP CAP.	0.1uF	25V	B	GRM188B11E104KA01D	K22144814		1-	A	A3
C 5506	CHIP CAP.	0.01uF	50V	B	GRM188B11H103KA01D	K22174823		1-	A	A3
C 5507	CHIP CAP.	0.01uF	50V	B	GRM188B11H103KA01D	K22174823		1-	A	A3
C 5509	CHIP CAP.	0.01uF	50V	B	GRM188B11H103KA01D	K22174823		1-	A	A3
C 5510	CHIP CAP.	0.01uF	50V	B	GRM188B11H103KA01D	K22174823		1-	A	G3
C 5511	AL.ELECTRO.CAP.	10uF	50V		RE2-50V100ME3#	K40179041		1-	A	A2
C 5512	CHIP CAP.	0.01uF	50V	B	GRM188B11H103KA01D	K22174823		1-	A	G3
C 5513	CHIP CAP.	0.1uF	25V	B	GRM188B11E104KA01D	K22144814		1-	A	A2
C 5514	CHIP CAP.	0.047uF	25V	B	GRM188B11E473KA01D	K22144811		1-	A	G3
C 5515	CHIP CAP.	120pF	50V	CH	GRM1882C1H121JA01D	K22174237		1-	A	A2
C 5516	CHIP CAP.	120pF	50V	CH	GRM1882C1H121JA01D	K22174237		1-	A	A2
C 5517	CHIP CAP.	2pF	200V	CK	GRM1884C2D2R0CV01D	K22234204		1-	A	F3
C 5518	CHIP CAP.	22pF	50V	CH	GRM1882C1H220JA01D	K22174219		1-	A	G3
C 5519	CHIP CAP.	120pF	50V	CH	GRM1882C1H121JA01D	K22174237		1-	A	A2
C 5521	CHIP CAP.	0.01uF	50V	B	GRM188B11H103KA01D	K22174823		1-	A	H2
C 5525	CHIP CAP.	0.01uF	50V	B	GRM188B11H103KA01D	K22174823		1-	A	H2
C 5526	CHIP CAP.	0.01uF	50V	B	GRM188B11H103KA01D	K22174823		1-	A	C3
C 5527	CHIP CAP.	0.01uF	50V	B	GRM188B11H103KA01D	K22174823		1-	A	F3
C 5528	CHIP CAP.	0.01uF	50V	B	GRM188B11H103KA01D	K22174823		1-	A	F1
C 5529	CERAMIC CAP.	150pF	3KV	SL	CC45SL3FD151JYNN	K00359035		1-	A	F2
C 5530	CERAMIC CAP.	150pF	3KV	SL	CC45SL3FD151JYNN	K00359035		1-	A	F1
C 5531	CERAMIC CAP.	150pF	3KV	SL	CC45SL3FD151JYNN	K00359035		1-	A	F2
C 5532	CERAMIC CAP.	150pF	3KV	SL	CC45SL3FD151JYNN	K00359035		1-	A	F1
C 5533	CHIP CAP.	0.01uF	50V	B	GRM188B11H103KA01D	K22174823		1-	A	G2
C 5535	CHIP CAP.	0.01uF	50V	B	GRM188B11H103KA01D	K22174823		1-	A	C3
C 5536	CHIP CAP.	0.01uF	50V	B	GRM188B11H103KA01D	K22174823		1-	A	F3
C 5537	CHIP CAP.	0.01uF	50V	B	GRM188B11H103KA01D	K22174823		1-	A	F1
C 5538	CERAMIC CAP.	82pF	3KV	SL	CC45SL3FD820JYNN	K00359034		1-	A	F2
C 5539	CERAMIC CAP.	82pF	3KV	SL	CC45SL3FD820JYNN	K00359034		1-	A	F1
C 5540	CERAMIC CAP.	82pF	3KV	SL	CC45SL3FD820JYNN	K00359034		1-	A	F2
C 5541	CERAMIC CAP.	82pF	3KV	SL	CC45SL3FD820JYNN	K00359034		1-	A	F1
C 5542	CHIP CAP.	0.01uF	50V	B	GRM188B11H103KA01D	K22174823		1-	A	B3
C 5543	CHIP CAP.	0.01uF	50V	B	GRM188B11H103KA01D	K22174823		1-	A	E3
C 5544	CHIP CAP.	0.01uF	50V	B	GRM188B11H103KA01D	K22174823		1-	A	F1
C 5545	CERAMIC CAP.	39pF	3KV	SL	CC45SL3FD390JYNN	K00359033		1-	A	E2
C 5546	CERAMIC CAP.	39pF	3KV	SL	CC45SL3FD390JYNN	K00359033		1-	A	F1
C 5547	CERAMIC CAP.	39pF	3KV	SL	CC45SL3FD390JYNN	K00359033		1-	A	F2
C 5548	CERAMIC CAP.	39pF	3KV	SL	CC45SL3FD390JYNN	K00359033		1-	A	E1
C 5549	CHIP CAP.	0.01uF	50V	B	GRM188B11H103KA01D	K22174823		1-	A	G2
C 5551	CHIP CAP.	0.01uF	50V	B	GRM188B11H103KA01D	K22174823		1-	A	B3
C 5552	CHIP CAP.	0.01uF	50V	B	GRM188B11H103KA01D	K22174823		1-	A	E3
C 5553	CHIP CAP.	0.01uF	50V	B	GRM188B11H103KA01D	K22174823		1-	A	E1
C 5554	CERAMIC CAP.	18pF	3KV	SL	CC45SL3FD180JYNN	K00359028		1-	A	E2
C 5555	CERAMIC CAP.	18pF	3KV	SL	CC45SL3FD180JYNN	K00359028		1-	A	E1
C 5556	CERAMIC CAP.	22pF	3KV	SL	CC45SL3FD220JYNN	K00359038		1-	A	E2
C 5557	CERAMIC CAP.	22pF	3KV	SL	CC45SL3FD220JYNN	K00359038		1-	A	E1
C 5558	CHIP CAP.	0.01uF	50V	B	GRM188B11H103KA01D	K22174823		1-	A	B3
C 5559	CHIP CAP.	0.01uF	50V	B	GRM188B11H103KA01D	K22174823		1-	A	E3
C 5560	CHIP CAP.	0.01uF	50V	B	GRM188B11H103KA01D	K22174823		1-	A	E1
C 5561	CHIP CAP.	0.01uF	50V	B	GRM188B11H103KA01D	K22174823		1-	A	G1
C 5563	CERAMIC CAP.	10pF	3KV	SL	CC45SL3FD100JYNN	K00359037		1-	A	E2
C 5564	CERAMIC CAP.	10pF	3KV	SL	CC45SL3FD100JYNN	K00359037		1-	A	E1
C 5565	CERAMIC CAP.	10pF	3KV	SL	CC45SL3FD100JYNN	K00359037		1-	A	E2
C 5566	CERAMIC CAP.	10pF	3KV	SL	CC45SL3FD100JYNN	K00359037		1-	A	E1
C 5567	CHIP CAP.	0.01uF	50V	B	GRM188B11H103KA01D	K22174823		1-	A	A3
C 5568	CHIP CAP.	0.01uF	50V	B	GRM188B11H103KA01D	K22174823		1-	A	D3
C 5569	CHIP CAP.	0.01uF	50V	B	GRM188B11H103KA01D	K22174823		1-	A	D1
C 5570	CERAMIC CAP.	10pF	3KV	SL	CC45SL3FD100JYNN	K00359037		1-	A	D2
C 5571	CERAMIC CAP.	10pF	3KV	SL	CC45SL3FD100JYNN	K00359037		1-	A	D2
C 5572	CERAMIC CAP.	10pF	3KV	SL	CC45SL3FD100JYNN	K00359037		1-	A	D1
C 5573	CERAMIC CAP.	10pF	3KV	SL	CC45SL3FD100JYNN	K00359037		1-	A	D1
C 5574	CERAMIC CAP.	6pF	500V	CH	CCDE050CH060D500	K02279071		1-	A	G1
C 5575	CHIP CAP.	56pF	50V	CH	GRM1882C1H560JA01D	K22174229		1-	A	G1
C 5576	CHIP CAP.	68pF	50V	CH	GRM1882C1H680JA01D	K22174231		1-	A	G1
C 5577	CERAMIC CAP.	10pF	3KV	SL	CC45SL3FD100JYNN	K00359037		1-	A	D2
C 5578	CERAMIC CAP.	10pF	3KV	SL	CC45SL3FD100JYNN	K00359037		1-	A	D2
C 5579	CERAMIC CAP.	10pF	3KV	SL	CC45SL3FD100JYNN	K00359037		1-	A	D2
C 5580	CERAMIC CAP.	10pF	3KV	SL	CC45SL3FD100JYNN	K00359037		1-	A	D2

REF	DESCRIPTION	VALUE	V/W	TOL.	MFR'S DESIG	YAESU P/N	VERS.	LOT	SIDE	LAY ADR
C 5581	CHIP CAP.	0.01uF	50V	B	GRM188B11H103KA01D	K22174823		1-	A	A1
C 5582	CHIP CAP.	0.01uF	50V	B	GRM188B11H103KA01D	K22174823		1-	A	D3
C 5583	CHIP CAP.	0.01uF	50V	B	GRM188B11H103KA01D	K22174823		1-	A	D1
C 5585	CHIP CAP.	15pF	500V	CH	CF316CH150J500AT	K22271288		1-	A	D2
C 5586	CHIP CAP.	15pF	500V	CH	CF316CH150J500AT	K22271288		1-	A	D2
C 5587	CHIP CAP.	15pF	500V	CH	CF316CH150J500AT	K22271288		1-	A	D2
C 5588	CHIP CAP.	15pF	500V	CH	CF316CH150J500AT	K22271288		1-	A	D1
C 5589	CHIP CAP.	0.0022uF	50V	B	GRM188B11H222KA01D	K22174822		1-	A	G1
C 5590	CHIP CAP.	15pF	500V	CH	CF316CH150J500AT	K22271288		1-	A	D2
C 5591	CHIP CAP.	15pF	500V	CH	CF316CH150J500AT	K22271288		1-	A	D1
C 5592	CHIP CAP.	0.0022uF	50V	B	GRM188B11H222KA01D	K22174822		1-	A	H1
C 5593	CHIP CAP.	0.01uF	50V	B	GRM188B11H103KA01D	K22174823		1-	A	A1
C 5594	CHIP CAP.	0.01uF	50V	B	GRM188B11H103KA01D	K22174823		1-	A	C3
C 5595	CHIP CAP.	0.01uF	50V	B	GRM188B11H103KA01D	K22174823		1-	A	C1
C 5596	CHIP CAP.	7pF	500V	CH	CF316CH070D500AT	K22271252		1-	A	D1
C 5597	CHIP CAP.	7pF	500V	CH	CF316CH070D500AT	K22271252		1-	A	C1
C 5599	CHIP CAP.	7pF	500V	CH	CF316CH070D500AT	K22271252		1-	A	D2
C 5600	CHIP CAP.	7pF	500V	CH	CF316CH070D500AT	K22271252		1-	A	D2
C 5601	CHIP CAP.	56pF	50V	CH	GRM1882C1H560JA01D	K22174229		1-	A	H1
C 5602	CHIP CAP.	7pF	500V	CH	CF316CH070D500AT	K22271252		1-	A	D2
C 5603	CHIP CAP.	7pF	500V	CH	CF316CH070D500AT	K22271252		1-	A	D2
C 5604	CERAMIC CAP.	6pF	500V	CH	CCDE050CH060D500	K02279071		1-	A	H1
C 5605	CHIP CAP.	56pF	50V	CH	GRM1882C1H560JA01D	K22174229		1-	A	H1
D 5501	DIODE				BAS316	G2070716		1-	A	G3
D 5502	DIODE				1SS372(TE85R.F)	G2070632		1-	A	G3
D 5503	SURGE ABSORBER				RHCA-201Q43U	Q9000825		1-	A	G3
D 5504	DIODE				BAS316	G2070716		1-	A	H2
D 5506	DIODE				BAS316	G2070716		1-	A	H2
D 5507	DIODE				BAS316	G2070716		1-	A	C3
D 5508	DIODE				BAS316	G2070716		1-	A	F3
D 5509	DIODE				BAS316	G2070716		1-	A	F1
D 5510	DIODE				BAS316	G2070716		1-	A	G2
D 5511	DIODE				BAS316	G2070716		1-	A	C3
D 5512	DIODE				BAS316	G2070716		1-	A	F3
D 5513	DIODE				BAS316	G2070716		1-	A	F1
D 5514	SURGE ABSORBER				RHCA-501Q43U	Q9000922		1-	A	G3
D 5515	DIODE				BAS316	G2070716		1-	A	B3
D 5516	DIODE				BAS316	G2070716		1-	A	E3
D 5517	DIODE				BAS316	G2070716		1-	A	F1
D 5518	DIODE				BAS316	G2070716		1-	A	G2
D 5519	DIODE				BAS316	G2070716		1-	A	B3
D 5520	DIODE				BAS316	G2070716		1-	A	E3
D 5521	DIODE				BAS316	G2070716		1-	A	E1
D 5522	DIODE				BAS316	G2070716		1-	A	B3
D 5523	DIODE				BAS316	G2070716		1-	A	E3
D 5524	DIODE				BAS316	G2070716		1-	A	E1
D 5525	DIODE				BAS316	G2070716		1-	A	G1
D 5526	DIODE				BAS316	G2070716		1-	A	A3
D 5527	DIODE				BAS316	G2070716		1-	A	D3
D 5528	DIODE				BAS316	G2070716		1-	A	D1
D 5529	DIODE				BAS316	G2070716		1-	A	A1
D 5530	DIODE				BAS316	G2070716		1-	A	D3
D 5531	DIODE				BAS316	G2070716		1-	A	D1
D 5532	DIODE				DB2J31300L	G2071338		1-	A	G1
D 5533	DIODE				BAS316	G2070716		1-	A	A1
D 5534	DIODE				BAS316	G2070716		1-	A	D3
D 5535	DIODE				BAS316	G2070716		1-	A	C1
D 5536	DIODE				DB2J31300L	G2071338		1-	A	H1
D 5537	SURGE ABSORBER				RHCA-301Q43U	Q9000827		1-	A	H1
D 5539	SURGE ABSORBER				RHCA-301Q43U	Q9000827		1-	A	H3
J 5501	CONNECTOR				18FLT-SM2-TB(LF)(SN)(M)	P1091176		1-	A	A3
J 5502	CONNECTOR				TMP-J01X-V6	P1090210		1-	A	G3
J 5503	CONNECTOR				TMP-J01X-V6	P1090210		1-	A	H1
J 5505	CONNECTOR				TMP-J01X-V6	P1090210		1-	A	H3
J 5506	CONNECTOR				SC25-03WS	P0090622		1-	A	F1
J 5507	CONNECTOR				TMP-J01X-V6	P1090210		1-	A	H1
JP5501	WIRE ASSY				GRA 30 */* QEV	T9318351		1-	A	G1
L 5501	COIL A1				1.5T18D2.0PEW-R	L0023121		1-	A	C1
L 5502	COIL A1				1.5T18D2.0PEW-R	L0023121		1-	A	C1
L 5503	COIL A1				2.5T18D2.0PEW-R	L0023122		1-	A	C1
L 5504	COIL A1				2.5T18D2.0PEW-R	L0023122		1-	A	B1
L 5505	COIL A1				2.5T18D2.0PEW-R	L0023122		1-	A	B1
L 5506	COIL A1				3.5T18D2.0PEW-R	L0023123		1-	A	B1

REF	DESCRIPTION	VALUE	V/W	TOL.	MFR'S DESIG	YAESU P/N	VERS.	LOT	SIDE	LAY ADR
L 5507	COIL A1				6.5T18D2.0PEW-R	L0023124		1-	A	A1
L 5508	M.RFC	1000uH			LLM3225-102J	L1691157		1-	A	G1
L 5509	TOROIDAL COIL	260uH			260U 3A RI9.3-4.8-5	L0022767		1-	A	G1
L 5509	TOROIDAL COIL	260uH			260U 3A RI9.3-4.8-5	L0022767A		3-	A	G1
L 5510	TOROIDAL COIL	2.6uH			2.60U 23T T80-6	L0023142		1-	A	B1
L 5511	M.RFC	1000uH			LLM3225-102J	L1691157		1-	A	H1
L 5512	TOROIDAL COIL	3.9uH			3.90U 26T T80-2	L0023141		1-	A	B1
L 5513	TOROIDAL COIL	3.9uH			3.90U 26T T80-2	L0023141		1-	A	C1
Q 5501	TRANSISTOR				2SC4081 T106	G3340818		1-	A	G3
Q 5502	TRANSISTOR				2SC4081 T106	G3340818		1-	A	G3
Q 5503	IC				UA78L05ACPKE6(TAPE)	G1094229		1-	A	A3
Q 5504	TRANSISTOR				UMD5N TR	G3070343		1-	A	E3
Q 5505	TRANSISTOR				UMD5N TR	G3070343		1-	A	C3
Q 5506	TRANSISTOR				UMD5N TR	G3070343		1-	A	E3
Q 5507	TRANSISTOR				UMD5N TR	G3070343		1-	A	C3
Q 5508	IC				BU2152FS(TAPE)	G1093942		1-	A	A2
Q 5509	TRANSISTOR				UMD5N TR	G3070343		1-	A	E3
Q 5510	TRANSISTOR				UMD5N TR	G3070343		1-	A	C3
Q 5511	TRANSISTOR				UMD5N TR	G3070343		1-	A	F3
Q 5512	TRANSISTOR				UMD5N TR	G3070343		1-	A	B3
Q 5513	TRANSISTOR				UMD5N TR	G3070343		1-	A	F3
Q 5514	TRANSISTOR				UMD5N TR	G3070343		1-	A	B3
Q 5515	TRANSISTOR				UMD5N TR	G3070343		1-	A	F3
Q 5516	TRANSISTOR				UMD5N TR	G3070343		1-	A	B3
Q 5517	TRANSISTOR				UMD5N TR	G3070343		1-	A	G3
Q 5518	TRANSISTOR				UMD5N TR	G3070343		1-	A	E1
Q 5519	TRANSISTOR				UMD5N TR	G3070343		1-	A	C1
Q 5520	TRANSISTOR				UMD5N TR	G3070343		1-	A	A1
Q 5521	TRANSISTOR				UMD5N TR	G3070343		1-	A	H3
Q 5522	TRANSISTOR				UMD5N TR	G3070343		1-	A	E1
Q 5523	TRANSISTOR				UMD5N TR	G3070343		1-	A	D1
Q 5524	TRANSISTOR				UMD5N TR	G3070343		1-	A	A1
Q 5526	TRANSISTOR				UMD5N TR	G3070343		1-	A	F1
Q 5527	TRANSISTOR				UMD5N TR	G3070343		1-	A	D1
Q 5528	TRANSISTOR				UMD5N TR	G3070343		1-	A	D3
Q 5529	TRANSISTOR				UMD5N TR	G3070343		1-	A	H2
Q 5530	TRANSISTOR				UMD5N TR	G3070343		1-	A	F1
Q 5531	TRANSISTOR				UMD5N TR	G3070343		1-	A	E1
Q 5532	TRANSISTOR				UMD5N TR	G3070343		1-	A	D3
Q 5533	TRANSISTOR				UMD5N TR	G3070343		1-	A	G3
R 5501	CHIP RES.	100k	1/16W	5%	RMC1/16 104JATP	J24185104		1-	A	G3
R 5502	CHIP RES.	10k	1/16W	5%	RMC1/16 103JATP	J24185103		1-	A	G3
R 5503	CHIP RES.	100	1/16W	5%	RMC1/16 101JATP	J24185101		1-	A	G3
R 5504	CHIP RES.	22	1/16W	5%	RMC1/16 220JATP	J24185220		1-	A	G3
R 5505	CHIP RES.	680	1/16W	5%	RMC1/16 681JATP	J24185681		1-	A	A2
R 5506	CHIP RES.	680	1/16W	5%	RMC1/16 681JATP	J24185681		1-	A	A2
R 5507	CHIP RES.	680	1/16W	5%	RMC1/16 681JATP	J24185681		1-	A	A2
R 5508	CHIP RES.	100k	1/16W	5%	RMC1/16 104JATP	J24185104		1-	A	G3
R 5509	CHIP RES.	100	1/16W	5%	RMC1/16 101JATP	J24185101		1-	A	H2
R 5511	CHIP RES.	100	1/16W	5%	RMC1/16 101JATP	J24185101		1-	A	H3
R 5512	CHIP RES.	100	1/16W	5%	RMC1/16 101JATP	J24185101		1-	A	C3
R 5513	CHIP RES.	100	1/16W	5%	RMC1/16 101JATP	J24185101		1-	A	F3
R 5514	CHIP RES.	100	1/16W	5%	RMC1/16 101JATP	J24185101		1-	A	F1
R 5515	CHIP RES.	100	1/16W	5%	RMC1/16 101JATP	J24185101		1-	A	G3
R 5516	CHIP RES.	100	1/16W	5%	RMC1/16 101JATP	J24185101		1-	A	C3
R 5517	CHIP RES.	100	1/16W	5%	RMC1/16 101JATP	J24185101		1-	A	F3
R 5518	CHIP RES.	100	1/16W	5%	RMC1/16 101JATP	J24185101		1-	A	F1
R 5519	CHIP RES.	100	1/16W	5%	RMC1/16 101JATP	J24185101		1-	A	C3
R 5520	CHIP RES.	100	1/16W	5%	RMC1/16 101JATP	J24185101		1-	A	E3
R 5521	CHIP RES.	100	1/16W	5%	RMC1/16 101JATP	J24185101		1-	A	E1
R 5522	CHIP RES.	100	1/16W	5%	RMC1/16 101JATP	J24185101		1-	A	G3
R 5523	CHIP RES.	100	1/16W	5%	RMC1/16 101JATP	J24185101		1-	A	B3
R 5524	CHIP RES.	100	1/16W	5%	RMC1/16 101JATP	J24185101		1-	A	E3
R 5525	CHIP RES.	100	1/16W	5%	RMC1/16 101JATP	J24185101		1-	A	E1
R 5526	CHIP RES.	100	1/16W	5%	RMC1/16 101JATP	J24185101		1-	A	G1
R 5527	CHIP RES.	100	1/16W	5%	RMC1/16 101JATP	J24185101		1-	A	B3
R 5528	CHIP RES.	100	1/16W	5%	RMC1/16 101JATP	J24185101		1-	A	E3
R 5529	CHIP RES.	100	1/16W	5%	RMC1/16 101JATP	J24185101		1-	A	E1
R 5530	CHIP RES.	100	1/16W	5%	RMC1/16 101JATP	J24185101		1-	A	A3
R 5531	CHIP RES.	100	1/16W	5%	RMC1/16 101JATP	J24185101		1-	A	E3
R 5532	CHIP RES.	100	1/16W	5%	RMC1/16 101JATP	J24185101		1-	A	D1
R 5533	CHIP RES.	100	1/16W	5%	RMC1/16 101JATP	J24185101		1-	A	A1
R 5534	CHIP RES.	100	1/16W	5%	RMC1/16 101JATP	J24185101		1-	A	D3

REF	DESCRIPTION	VALUE	V/W	TOL.	MFR'S DESIG	YAESU P/N	VERS.	LOT	SIDE	LAY ADR
R 5535	CHIP RES.	100	1/16W	5%	RMC1/16 101JATP	J24185101		1-	A	D1
R 5536	CHIP RES.	3.3k	1/16W	1%	RMC1/16 332FTP	J24183332		1-	A	F1
R 5537	CHIP RES.	56	1W	5%	RMC1 560JTE	J24305560		1-	A	G1
R 5538	CHIP RES.	4.7k	1/16W	1%	RMC1/16 472FTP	J24183472		1-	A	F1
R 5539	CHIP RES.	56	1W	5%	RMC1 560JTE	J24305560		1-	A	G1
R 5540	CHIP RES.	4.7k	1/16W	1%	RMC1/16 472FTP	J24183472		1-	A	F1
R 5541	CHIP RES.	100	1/16W	5%	RMC1/16 101JATP	J24185101		1-	A	A1
R 5542	CHIP RES.	100	1/16W	5%	RMC1/16 101JATP	J24185101		1-	A	D3
R 5543	CHIP RES.	100	1/16W	5%	RMC1/16 101JATP	J24185101		1-	A	C1
R 5544	CHIP RES.	3.3k	1/16W	1%	RMC1/16 332FTP	J24183332		1-	A	F1
RL5501	REED RELAY				SIP-1A-12Y	M1190202		1-	A	G3
RL5502	RELAY		DC12V		FTR-B3GA012Z-B10 DC12V	M1190201		1-	A	H2
RL5504	RELAY		DC12V		FTR-B3GA012Z-B10 DC12V	M1190201		1-	A	H3
RL5505	RELAY		DC12V		JV12S-KS DC12V	M1190205		1-	A	C3
RL5506	RELAY		DC12V		JV12S-KS DC12V	M1190205		1-	A	F3
RL5507	RELAY		DC12V		JV12S-KS DC12V	M1190205		1-	A	F1
RL5508	RELAY		DC12V		JV12S-KS DC12V	M1190205		1-	A	C3
RL5509	RELAY		DC12V		JV12S-KS DC12V	M1190205		1-	A	F3
RL5510	RELAY		DC12V		JV12S-KS DC12V	M1190205		1-	A	F1
RL5511	RELAY		DC12V		FTR-B3GA012Z-B10 DC12V	M1190201		1-	A	G2
RL5512	RELAY		DC12V		JV12S-KS DC12V	M1190205		1-	A	C3
RL5513	RELAY		DC12V		JV12S-KS DC12V	M1190205		1-	A	F3
RL5514	RELAY		DC12V		JV12S-KS DC12V	M1190205		1-	A	E1
RL5515	RELAY		DC12V		JV12S-KS DC12V	M1190205		1-	A	B3
RL5516	RELAY		DC12V		JV12S-KS DC12V	M1190205		1-	A	E3
RL5517	RELAY		DC12V		JV12S-KS DC12V	M1190205		1-	A	E1
RL5518	RELAY		DC12V		G5Q-14 DC12V	M1190199		1-	A	G2
RL5519	RELAY		DC12V		JV12S-KS DC12V	M1190205		1-	A	B3
RL5520	RELAY		DC12V		JV12S-KS DC12V	M1190205		1-	A	E3
RL5521	RELAY		DC12V		JV12S-KS DC12V	M1190205		1-	A	E1
RL5522	RELAY		DC12V		G5Q-14 DC12V	M1190199		1-	A	G2
RL5523	RELAY		DC12V		JV12S-KS DC12V	M1190205		1-	A	B3
RL5524	RELAY		DC12V		JV12S-KS DC12V	M1190205		1-	A	D3
RL5525	RELAY		DC12V		JV12S-KS DC12V	M1190205		1-	A	D1
RL5526	RELAY		DC12V		JV12S-KS DC12V	M1190205		1-	A	A1
RL5527	RELAY		DC12V		JV12S-KS DC12V	M1190205		1-	A	D3
RL5528	RELAY		DC12V		JV12S-KS DC12V	M1190205		1-	A	D1
RL5529	RELAY		DC12V		JV12S-KS DC12V	M1190205		1-	A	A1
RL5530	RELAY		DC12V		JV12S-KS DC12V	M1190205		1-	A	D3
RL5531	RELAY		DC12V		JV12S-KS DC12V	M1190205		1-	A	C1
TC5501	TRIMMER CAP.	20pF			TZB4R200AA10R00	K91000217		1-	A	H1

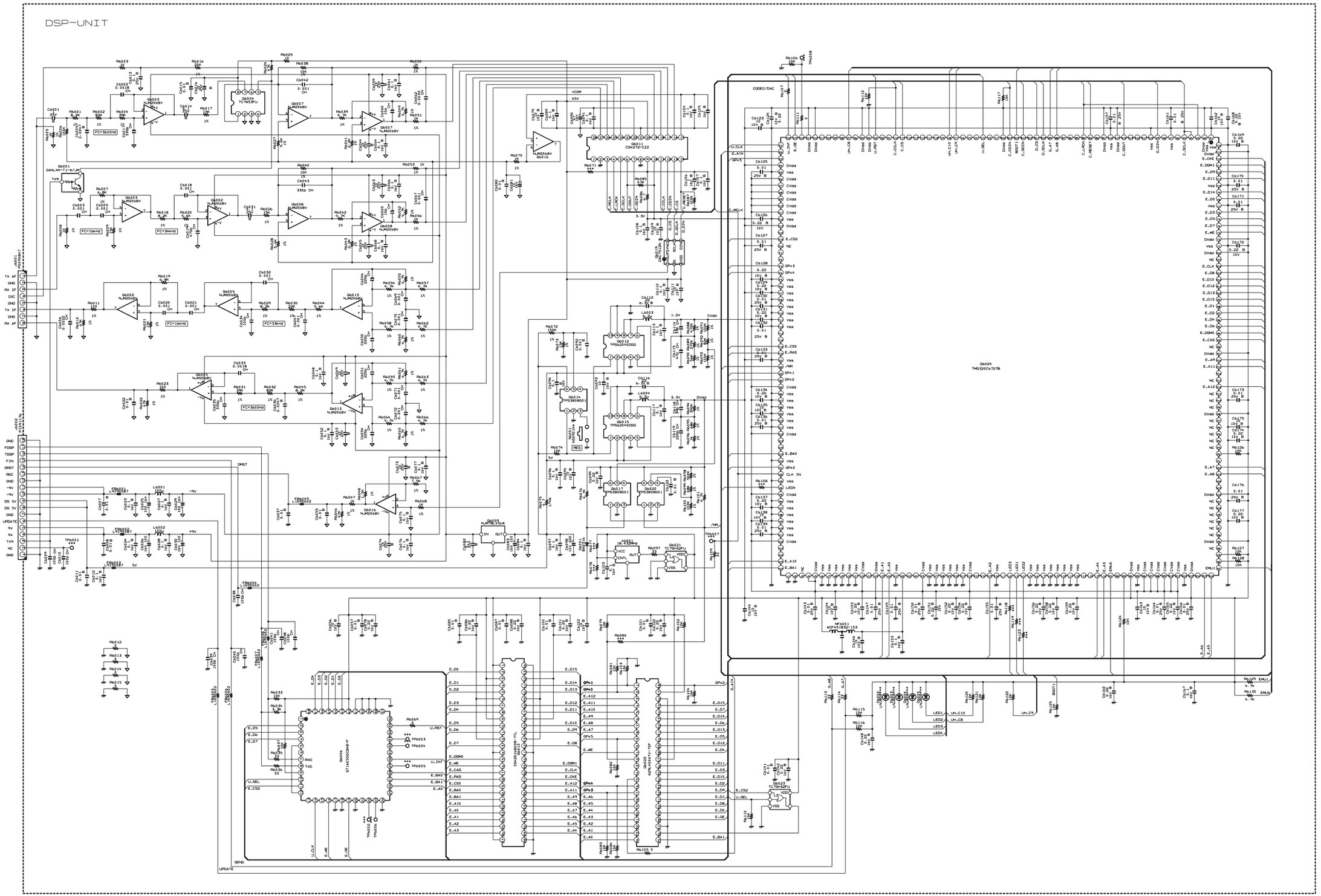
DSP-UNIT
CODEC/DAC
VCOM
Q6024
TMS320C6727B
Q6022
ACP410K18ZQ-TRF
Q6023
ST16CF54CJ44-F
Q6025
TC7SH32FU
Q6026
TC7SH32FU
Q6027
TC7SH32FU
Q6028
TC7SH32FU
Q6029
TC7SH32FU
Q6030
TC7SH32FU
Q6031
TC7SH32FU
Q6032
TC7SH32FU
Q6033
TC7SH32FU
Q6034
TC7SH32FU
Q6035
TC7SH32FU
Q6036
TC7SH32FU
Q6037
TC7SH32FU
Q6038
TC7SH32FU
Q6039
TC7SH32FU
Q6040
TC7SH32FU
Q6041
TC7SH32FU
Q6042
TC7SH32FU
Q6043
TC7SH32FU
Q6044
TC7SH32FU

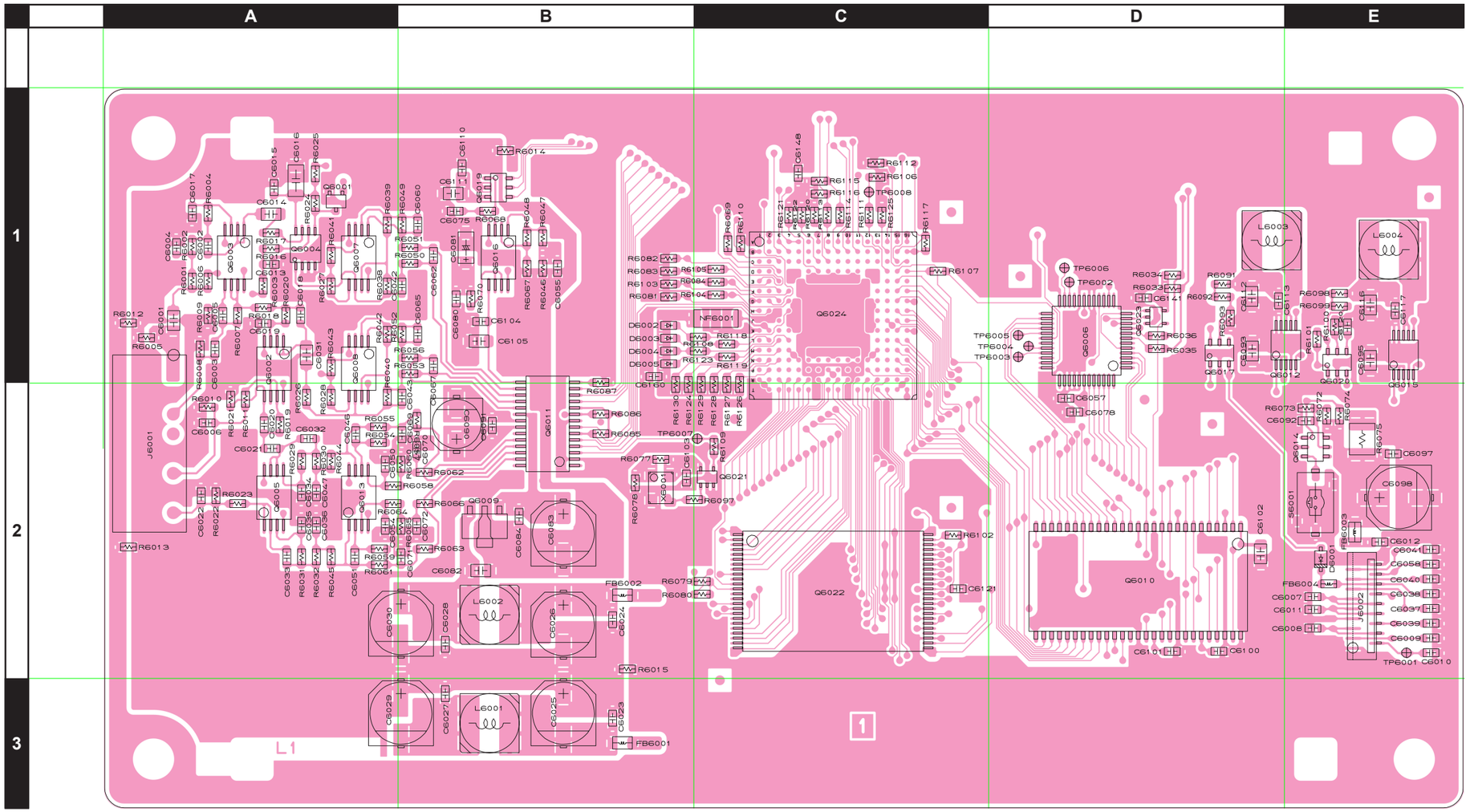
A
B
C
D
E
1
2
3
L1
1

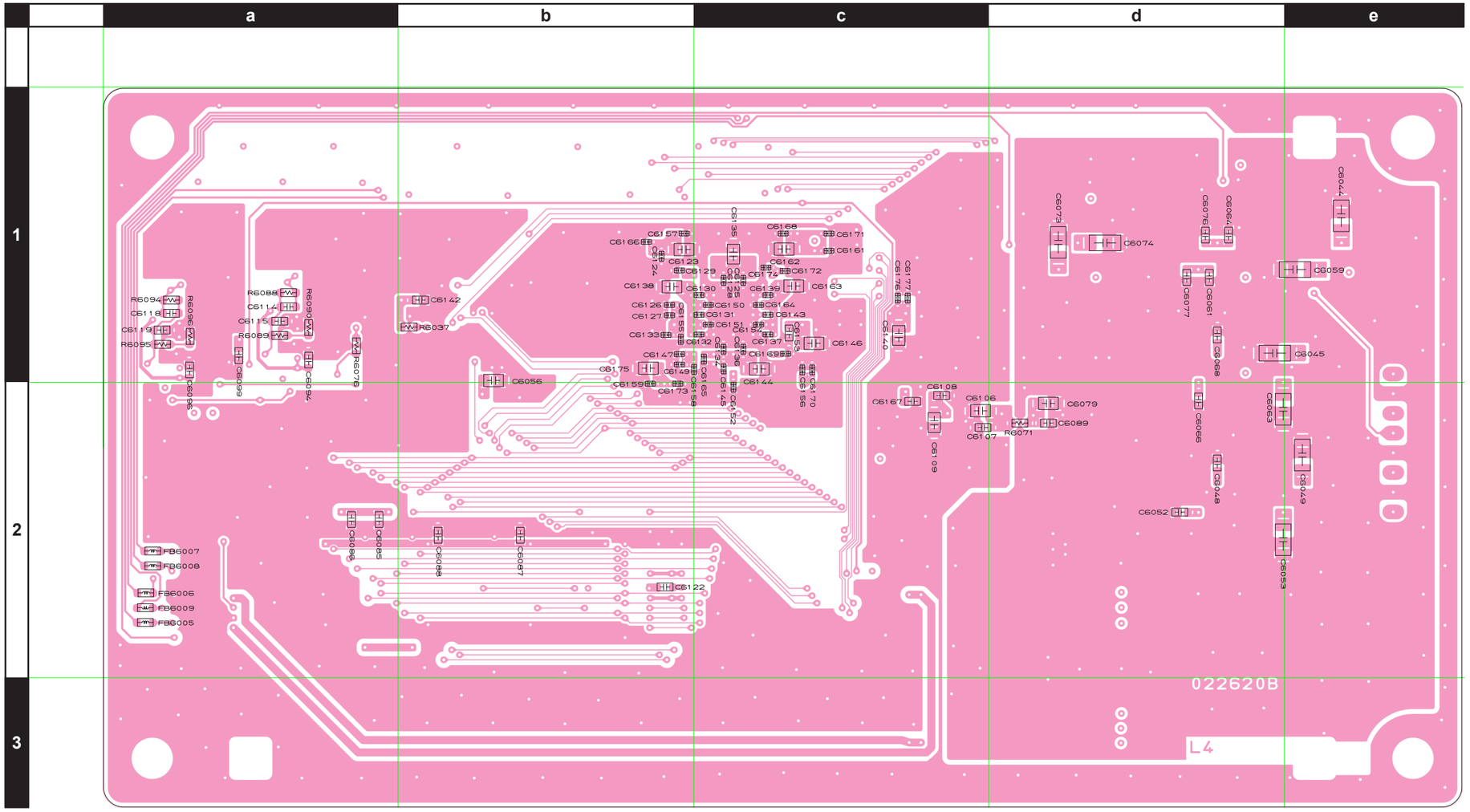
a
b
c
d
e
1
2
3
022620B
L4

REF	DESCRIPTION	VALUE	V/W	TOL.	MFR'S DESIG	YAESU P/N	VERS.	LOT	SIDE	LAY ADR
	PCB with Components					CS2185701				
C 6001	CHIP CAP.	1uF	25V	B	GRM21BB31E105KA98L	K22140826		1-	A	A1
C 6002	CHIP CAP.	0.0018uF	50V	CH	GRM1882C1H182JA01D	K22174278		1-	A	A1
C 6003	CHIP CAP.	0.001uF	50V	CH	GRM1882C1H102JA01D	K22174275		1-	A	A1
C 6004	CHIP CAP.	0.0047uF	50V	B	GRM188B11H472KA01D	K22174817		1-	A	A1
C 6005	CHIP CAP.	0.001uF	50V	CH	GRM1882C1H102JA01D	K22174275		1-	A	A1
C 6006	CHIP CAP.	0.0022uF	50V	CH	GRM1882C1H222JA01D	K22174279		1-	A	A2
C 6007	CHIP CAP.	0.01uF	50V	B	GRM188B11H103KA01D	K22174823		1-	A	E2
C 6008	CHIP CAP.	0.01uF	50V	B	GRM188B11H103KA01D	K22174823		1-	A	E2
C 6009	CHIP CAP.	100pF	50V	CH	GRM1882C1H101JA01D	K22174235		1-	A	E2
C 6010	CHIP CAP.	100pF	50V	CH	GRM1882C1H101JA01D	K22174235		1-	A	E2
C 6011	CHIP CAP.	0.01uF	50V	B	GRM188B11H103KA01D	K22174823		1-	A	E2
C 6012	CHIP CAP.	0.1uF	16V	B	GRM188B11C104KA01D	K22124805		1-	A	E2
C 6013	CHIP CAP.	0.1uF	25V	B	GRM188B11E104KA01D	K22144814		1-	A	A1
C 6014	CHIP CAP.	0.1uF	25V	B	GRM21BB11E104KA01L	K22140811		1-	A	A1
C 6015	CHIP CAP.	0.01uF	50V	B	GRM188B11H103KA01D	K22174823		1-	A	A1
C 6016	CHIP CAP.	10uF	25V	B	GRM31CB31E106KA75L	K22141815		1-	A	A1
C 6017	CHIP CAP.	330pF	50V	CH	GRM1882C1H331JA01D	K22174253		1-	A	A1
C 6018	CHIP CAP.	0.001uF	50V	CH	GRM1882C1H102JA01D	K22174275		1-	A	A1
C 6019	CHIP CAP.	470pF	50V	CH	GRM1882C1H471JA01D	K22174249		1-	A	A1
C 6020	CHIP CAP.	0.001uF	50V	CH	GRM1882C1H102JA01D	K22174275		1-	A	A2
C 6021	CHIP CAP.	0.001uF	50V	CH	GRM1882C1H102JA01D	K22174275		1-	A	A2
C 6022	CHIP CAP.	0.01uF	50V	B	GRM188B11H103KA01D	K22174823		1-	A	A2
C 6023	CHIP CAP.	0.1uF	16V	B	GRM188B11C104KA01D	K22124805		1-	A	B3
C 6024	CHIP CAP.	0.1uF	16V	B	GRM188B11C104KA01D	K22124805		1-	A	B2
C 6025	AL.ELECTRO.CAP.	100uF	16V		EEE1CA101WP	K48120012		1-	A	B3
C 6026	AL.ELECTRO.CAP.	100uF	16V		EEE1CA101WP	K48120012		1-	A	B2
C 6027	CHIP CAP.	0.1uF	16V	B	GRM188B11C104KA01D	K22124805		1-	A	B3
C 6028	CHIP CAP.	0.1uF	16V	B	GRM188B11C104KA01D	K22124805		1-	A	B2
C 6029	AL.ELECTRO.CAP.	100uF	16V		EEE1CA101WP	K48120012		1-	A	B3
C 6030	AL.ELECTRO.CAP.	100uF	16V		EEE1CA101WP	K48120012		1-	A	B2
C 6031	CHIP CAP.	0.1uF	25V	B	GRM21BB11E104KA01L	K22140811		1-	A	A1
C 6032	CHIP CAP.	0.001uF	50V	CH	GRM1882C1H102JA01D	K22174275		1-	A	A2
C 6033	CHIP CAP.	0.0018uF	50V	CH	GRM1882C1H182JA01D	K22174278		1-	A	A2
C 6034	CHIP CAP.	100pF	50V	CH	GRM1882C1H101JA01D	K22174235		1-	A	A2
C 6035	CHIP CAP.	330pF	50V	CH	GRM1882C1H331JA01D	K22174253		1-	A	A2
C 6036	CHIP CAP.	0.0047uF	50V	B	GRM188B11H472KA01D	K22174817		1-	A	A2
C 6037	CHIP CAP.	0.01uF	50V	B	GRM188B11H103KA01D	K22174823		1-	A	E2
C 6038	CHIP CAP.	100pF	50V	CH	GRM1882C1H101JA01D	K22174235		1-	A	E2
C 6039	CHIP CAP.	100pF	50V	CH	GRM1882C1H101JA01D	K22174235		1-	A	E2
C 6040	CHIP CAP.	100pF	50V	CH	GRM1882C1H101JA01D	K22174235		1-	A	E2
C 6041	CHIP CAP.	100pF	50V	CH	GRM1882C1H101JA01D	K22174235		1-	A	E2
C 6042	CHIP CAP.	0.001uF	50V	CH	GRM1882C1H102JA01D	K22174275		1-	A	B1
C 6043	CHIP CAP.	330pF	50V	CH	GRM1882C1H331JA01D	K22174253		1-	A	B2
C 6044	CHIP CAP.	10uF	25V	B	GRM31CB31E106KA75L	K22141815		1-	B	e1
C 6045	CHIP CAP.	10uF	25V	B	GRM31CB31E106KA75L	K22141815		1-	B	d1
C 6046	CHIP CAP.	220pF	50V	CH	GRM1882C1H221JA01D	K22174243		1-	A	A2
C 6047	CHIP CAP.	0.001uF	50V	CH	GRM1882C1H102JA01D	K22174275		1-	A	A2
C 6048	CHIP CAP.	0.1uF	16V	B	GRM188B11C104KA01D	K22124805		1-	B	d2
C 6049	CHIP CAP.	10uF	25V	B	GRM31CB31E106KA75L	K22141815		1-	B	e2
C 6050	CHIP CAP.	220pF	50V	CH	GRM1882C1H221JA01D	K22174243		1-	A	A2
C 6051	CHIP CAP.	220pF	50V	CH	GRM1882C1H221JA01D	K22174243		1-	A	A2
C 6052	CHIP CAP.	0.1uF	16V	B	GRM188B11C104KA01D	K22124805		1-	B	d2
C 6053	CHIP CAP.	10uF	25V	B	GRM31CB31E106KA75L	K22141815		1-	B	d2
C 6054	CHIP CAP.	220pF	50V	CH	GRM1882C1H221JA01D	K22174243		1-	A	A2
C 6055	CHIP CAP.	0.01uF	50V	B	GRM188B11H103KA01D	K22174823		1-	A	B1
C 6056	CHIP CAP.	10uF	10V	B	GRM21BB31A106KE18L	K22100808		1-	B	b1
C 6057	CHIP CAP.	0.01uF	50V	B	GRM188B11H103KA01D	K22174823		1-	A	D2
C 6058	CHIP CAP.	100pF	50V	CH	GRM1882C1H101JA01D	K22174235		1-	A	E2
C 6059	CHIP CAP.	10uF	25V	B	GRM31CB31E106KA75L	K22141815		1-	B	e1
C 6060	CHIP CAP.	10pF	50V	CH	GRM1882C1H100JA01D	K22174211		1-	A	B1
C 6061	CHIP CAP.	0.1uF	16V	B	GRM188B11C104KA01D	K22124805		1-	B	d1
C 6062	CHIP CAP.	0.0033uF	50V	CH	GRM1882C1H332JA01D	K22174281		1-	A	B1
C 6063	CHIP CAP.	10uF	25V	B	GRM31CB31E106KA75L	K22141815		1-	B	d2
C 6064	CHIP CAP.	0.1uF	16V	B	GRM188B11C104KA01D	K22124805		1-	B	d1
C 6065	CHIP CAP.	10pF	50V	CH	GRM1882C1H100JA01D	K22174211		1-	A	B1
C 6066	CHIP CAP.	0.1uF	16V	B	GRM188B11C104KA01D	K22124805		1-	B	d2
C 6067	CHIP CAP.	0.001uF	50V	CH	GRM1882C1H102JA01D	K22174275		1-	A	B1
C 6068	CHIP CAP.	0.1uF	16V	B	GRM188B11C104KA01D	K22124805		1-	B	d1
C 6069	CHIP CAP.	0.001uF	50V	CH	GRM1882C1H102JA01D	K22174275		1-	A	B2
C 6070	CHIP CAP.	0.001uF	50V	CH	GRM1882C1H102JA01D	K22174275		1-	A	B2
C 6071	CHIP CAP.	0.001uF	50V	CH	GRM1882C1H102JA01D	K22174275		1-	A	B2
C 6072	CHIP CAP.	0.001uF	50V	CH	GRM1882C1H102JA01D	K22174275		1-	A	B2

REF	DESCRIPTION	VALUE	V/W	TOL.	MFR'S DESIG	YAESU P/N	VERS.	LOT	SIDE	LAY ADR
C 6073	CHIP CAP.	10uF	25V	B	GRM31CB31E106KA75L	K22141815		1-	B	d1
C 6074	CHIP CAP.	10uF	25V	B	GRM31CB31E106KA75L	K22141815		1-	B	d1
C 6075	CHIP CAP.	0.1uF	16V	B	GRM188B11C104KA01D	K22124805		1-	A	B1
C 6076	CHIP CAP.	0.1uF	16V	B	GRM188B11C104KA01D	K22124805		1-	B	d1
C 6077	CHIP CAP.	0.1uF	16V	B	GRM188B11C104KA01D	K22124805		1-	B	d1
C 6078	CHIP CAP.	0.22uF	16V	B	GRM188B11C224KA01D	K22124815		1-	A	D2
C 6079	CHIP CAP.	10uF	10V	B	GRM21BB31A106KE18L	K22100808		1-	B	d2
C 6080	CHIP CAP.	0.01uF	50V	B	GRM188B11H103KA01D	K22174823		1-	A	B1
C 6081	CHIP TA.CAP.	10uF	16V		TEESVA1C106M8R	K78120077		1-	A	B1
C 6082	CHIP CAP.	0.1uF	25V	B	GRM21BB11E104KA01L	K22140811		1-	A	B2
C 6083	AL.ELECTRO.CAP.	100uF	16V		EEE1CA101WP	K48120012		1-	A	B2
C 6084	CHIP CAP.	0.1uF	16V	B	GRM188B11C104KA01D	K22124805		1-	A	B2
C 6085	CHIP CAP.	0.01uF	50V	B	GRM188B11H103KA01D	K22174823		1-	B	a2
C 6086	CHIP CAP.	0.22uF	16V	B	GRM188B11C224KA01D	K22124815		1-	B	a2
C 6087	CHIP CAP.	0.01uF	50V	B	GRM188B11H103KA01D	K22174823		1-	B	b2
C 6088	CHIP CAP.	0.22uF	16V	B	GRM188B11C224KA01D	K22124815		1-	B	b2
C 6089	CHIP CAP.	0.1uF	16V	B	GRM188B11C104KA01D	K22124805		1-	B	d2
C 6090	AL.ELECTRO.CAP.	47uF	16V		EEE1CA470WR	K48120025		1-	A	B2
C 6091	CHIP CAP.	0.1uF	16V	B	GRM188B11C104KA01D	K22124805		1-	A	B2
C 6092	CHIP CAP.	0.001uF	50V	B	GRM188B11H102KA01D	K22174821		1-	A	E2
C 6093	CHIP CAP.	10uF	10V	B	GRM21BB31A106KE18L	K22100808		1-	A	D1
C 6094	CHIP CAP.	0.1uF	16V	B	GRM188B11C104KA01D	K22124805		1-	B	a1
C 6095	CHIP CAP.	10uF	10V	B	GRM21BB31A106KE18L	K22100808		1-	A	E1
C 6096	CHIP CAP.	0.1uF	16V	B	GRM188B11C104KA01D	K22124805		1-	B	a1
C 6097	CHIP CAP.	0.1uF	16V	B	GRM188B11C104KA01D	K22124805		1-	A	E2
C 6098	AL.ELECTRO.CAP.	220uF	10V		EEE1AA221XP	K48100007		1-	A	E2
C 6099	CHIP CAP.	0.22uF	16V	B	GRM188B11C224KA01D	K22124815		1-	B	a1
C 6100	CHIP CAP.	0.01uF	50V	B	GRM188B11H103KA01D	K22174823		1-	A	D2
C 6101	CHIP CAP.	0.22uF	16V	B	GRM188B11C224KA01D	K22124815		1-	A	D2
C 6102	CHIP CAP.	10uF	10V	B	GRM21BB31A106KE18L	K22100808		1-	A	D2
C 6103	CHIP CAP.	0.1uF	16V	B	GRM188B11C104KA01D	K22124805		1-	A	B2
C 6104	CHIP CAP.	0.1uF	16V	B	GRM188B11C104KA01D	K22124805		1-	A	B1
C 6105	CHIP CAP.	1uF	16V	B	GRM21BB11C105KA01L	K22120809		1-	A	B1
C 6106	CHIP CAP.	1uF	16V	B	GRM21BB11C105KA01L	K22120809		1-	B	c2
C 6107	CHIP CAP.	0.1uF	16V	B	GRM188B11C104KA01D	K22124805		1-	B	c2
C 6108	CHIP CAP.	0.1uF	16V	B	GRM188B11C104KA01D	K22124805		1-	B	c2
C 6109	CHIP CAP.	10uF	10V	B	GRM21BB31A106KE18L	K22100808		1-	B	c2
C 6110	CHIP CAP.	0.1uF	16V	B	GRM188B11C104KA01D	K22124805		1-	A	B1
C 6111	CHIP CAP.	10uF	10V	B	GRM21BB31A106KE18L	K22100808		1-	A	B1
C 6112	CHIP CAP.	22uF	6.3V	B	GRM21BB30J226ME38L	K22080806		1-	A	D1
C 6113	CHIP CAP.	0.1uF	16V	B	GRM188B11C104KA01D	K22124805		1-	A	D1
C 6114	CHIP CAP.	33pF	50V	CH	GRM1882C1H330JA01D	K22174223		1-	B	a1
C 6115	CHIP CAP.	47pF	50V	CH	GRM1882C1H470JA01D	K22174227		1-	B	a1
C 6116	CHIP CAP.	22uF	6.3V	B	GRM21BB30J226ME38L	K22080806		1-	A	E1
C 6117	CHIP CAP.	0.1uF	16V	B	GRM188B11C104KA01D	K22124805		1-	A	E1
C 6118	CHIP CAP.	39pF	50V	CH	GRM1882C1H390JA01D	K22174225		1-	B	a1
C 6119	CHIP CAP.	220pF	50V	CH	GRM1882C1H221JA01D	K22174243		1-	B	a1
C 6120	CHIP CAP.	0.01uF	50V	B	GRM188B11H103KA01D	K22174823		1-	A	E1
C 6121	CHIP CAP.	0.01uF	50V	B	GRM188B11H103KA01D	K22174823		1-	A	C2
C 6122	CHIP CAP.	0.22uF	16V	B	GRM188B11C224KA01D	K22124815		1-	B	b2
C 6123	CHIP CAP.	10uF	10V	B	GRM21BB31A106KE18L	K22100808		1-	B	b1
C 6124	CHIP CAP.	0.22uF	10V	B	GRM155B31A224KE18D	K22108808		1-	B	b1
C 6125	CHIP CAP.	0.01uF	25V	B	GRM155B11E103KA01D	K22148834		1-	B	c1
C 6126	CHIP CAP.	0.22uF	10V	B	GRM155B31A224KE18D	K22108808		1-	B	b1
C 6127	CHIP CAP.	0.01uF	25V	B	GRM155B11E103KA01D	K22148834		1-	B	b1
C 6128	CHIP CAP.	0.22uF	10V	B	GRM155B31A224KE18D	K22108808		1-	B	c1
C 6129	CHIP CAP.	0.22uF	10V	B	GRM155B31A224KE18D	K22108808		1-	B	b1
C 6130	CHIP CAP.	0.01uF	25V	B	GRM155B11E103KA01D	K22148834		1-	B	c1
C 6131	CHIP CAP.	0.22uF	10V	B	GRM155B31A224KE18D	K22108808		1-	B	c1
C 6132	CHIP CAP.	0.01uF	25V	B	GRM155B11E103KA01D	K22148834		1-	B	c1
C 6133	CHIP CAP.	0.01uF	25V	B	GRM155B11E103KA01D	K22148834		1-	B	b1
C 6134	CHIP CAP.	0.22uF	10V	B	GRM155B31A224KE18D	K22108808		1-	B	c1
C 6135	CHIP CAP.	10uF	10V	B	GRM21BB31A106KE18L	K22100808		1-	B	c1
C 6136	CHIP CAP.	0.01uF	25V	B	GRM155B11E103KA01D	K22148834		1-	B	c1
C 6137	CHIP CAP.	0.22uF	10V	B	GRM155B31A224KE18D	K22108808		1-	B	c1
C 6138	CHIP CAP.	10uF	10V	B	GRM21BB31A106KE18L	K22100808		1-	B	b1
C 6139	CHIP CAP.	0.01uF	25V	B	GRM155B11E103KA01D	K22148834		1-	B	c1
C 6140	CHIP CAP.	10uF	10V	B	GRM21BB31A106KE18L	K22100808		1-	B	c1
C 6141	CHIP CAP.	0.01uF	50V	B	GRM188B11H103KA01D	K22174823		1-	A	D1
C 6142	CHIP CAP.	0.22uF	16V	B	GRM188B11C224KA01D	K22124815		1-	B	b1
C 6143	CHIP CAP.	0.01uF	25V	B	GRM155B11E103KA01D	K22148834		1-	B	c1
C 6144	CHIP CAP.	10uF	10V	B	GRM21BB31A106KE18L	K22100808		1-	B	c1
C 6145	CHIP CAP.	0.22uF	10V	B	GRM155B31A224KE18D	K22108808		1-	B	c1

REF	DESCRIPTION	VALUE	V/W	TOL.	MFR'S DESIG	YAESU P/N	VERS.	LOT	SIDE	LAY ADR
C 6146	CHIP CAP.	10uF	10V	B	GRM21BB31A106KE18L	K22100808		1-	B	c1
C 6147	CHIP CAP.	0.01uF	25V	B	GRM155B11E103KA01D	K22148834		1-	B	b1
C 6148	CHIP CAP.	0.22uF	16V	B	GRM188B11C224KA01D	K22124815		1-	A	C1
C 6149	CHIP CAP.	0.01uF	25V	B	GRM155B11E103KA01D	K22148834		1-	B	b1
C 6150	CHIP CAP.	0.01uF	25V	B	GRM155B11E103KA01D	K22148834		1-	B	c1
C 6151	CHIP CAP.	0.22uF	10V	B	GRM155B31A224KE18D	K22108808		1-	B	c1
C 6152	CHIP CAP.	0.22uF	10V	B	GRM155B31A224KE18D	K22108808		1-	B	c2
C 6153	CHIP CAP.	0.1uF	16V	B	GRM188B11C104KA01D	K22124805		1-	B	c1
C 6154	CHIP CAP.	0.22uF	10V	B	GRM155B31A224KE18D	K22108808		1-	B	c1
C 6155	CHIP CAP.	0.01uF	25V	B	GRM155B11E103KA01D	K22148834		1-	B	b1
C 6156	CHIP CAP.	0.22uF	10V	B	GRM155B31A224KE18D	K22108808		1-	B	c1
C 6157	CHIP CAP.	0.01uF	25V	B	GRM155B11E103KA01D	K22148834		1-	B	b1
C 6158	CHIP CAP.	0.22uF	10V	B	GRM155B31A224KE18D	K22108808		1-	B	c1
C 6159	CHIP CAP.	0.22uF	10V	B	GRM155B31A224KE18D	K22108808		1-	B	b2
C 6160	CHIP CAP.	0.22uF	16V	B	GRM188B11C224KA01D	K22124815		1-	A	B1
C 6161	CHIP CAP.	0.01uF	25V	B	GRM155B11E103KA01D	K22148834		1-	B	c1
C 6162	CHIP CAP.	10uF	10V	B	GRM21BB31A106KE18L	K22100808		1-	B	c1
C 6163	CHIP CAP.	10uF	10V	B	GRM21BB31A106KE18L	K22100808		1-	B	c1
C 6164	CHIP CAP.	0.01uF	25V	B	GRM155B11E103KA01D	K22148834		1-	B	c1
C 6165	CHIP CAP.	0.22uF	10V	B	GRM155B31A224KE18D	K22108808		1-	B	c1
C 6166	CHIP CAP.	0.01uF	25V	B	GRM155B11E103KA01D	K22148834		1-	B	b1
C 6167	CHIP CAP.	0.1uF	16V	B	GRM188B11C104KA01D	K22124805		1-	B	c2
C 6168	CHIP CAP.	0.22uF	10V	B	GRM155B31A224KE18D	K22108808		1-	B	c1
C 6169	CHIP CAP.	0.22uF	10V	B	GRM155B31A224KE18D	K22108808		1-	B	c1
C 6170	CHIP CAP.	0.01uF	25V	B	GRM155B11E103KA01D	K22148834		1-	B	c1
C 6171	CHIP CAP.	0.01uF	25V	B	GRM155B11E103KA01D	K22148834		1-	B	c1
C 6172	CHIP CAP.	0.22uF	10V	B	GRM155B31A224KE18D	K22108808		1-	B	c1
C 6173	CHIP CAP.	0.01uF	25V	B	GRM155B11E103KA01D	K22148834		1-	B	b2
C 6174	CHIP CAP.	0.22uF	10V	B	GRM155B31A224KE18D	K22108808		1-	B	c1
C 6175	CHIP CAP.	10uF	10V	B	GRM21BB31A106KE18L	K22100808		1-	B	b1
C 6176	CHIP CAP.	0.01uF	25V	B	GRM155B11E103KA01D	K22148834		1-	B	c1
C 6177	CHIP CAP.	0.22uF	10V	B	GRM155B31A224KE18D	K22108808		1-	B	c1
D 6001	DIODE				BAS316	G2070716		1-	A	E2
FB6001	FERRITE BEADS				BK2125HS101-T	L9190087		1-	A	B3
FB6002	FERRITE BEADS				BK2125HS101-T	L9190087		1-	A	B2
FB6003	FERRITE BEADS				BK2125HS101-T	L9190087		1-	A	E2
FB6004	FERRITE BEADS				BLM18BD182SN1D	L1690602		1-	A	E2
FB6005	FERRITE BEADS				BLM18BD182SN1D	L1690602		1-	B	a2
FB6006	FERRITE BEADS				BLM18BD182SN1D	L1690602		1-	B	a2
FB6007	FERRITE BEADS				BLM18BD182SN1D	L1690602		1-	B	a2
FB6008	FERRITE BEADS				BLM18BD182SN1D	L1690602		1-	B	a2
FB6009	FERRITE BEADS				BLM18BD182SN1D	L1690602		1-	B	a2
J 6001	CONNECTOR				SB20-08WL	P0090847		1-	A	A1
J 6002	CONNECTOR				18FLT-SM2-TB(LF)(SN)(M)	P1091176		1-	A	E2
L 6001	CHIP COIL	100uH			CDRH5D28NP-101NC	L1691511		1-	A	B3
L 6002	CHIP COIL	100uH			CDRH5D28NP-101NC	L1691511		1-	A	B2
L 6003	CHIP COIL	6.2uH			CDRH5D28NP-6R2NC	L1691444		1-	A	D1
L 6004	CHIP COIL	6.2uH			CDRH5D28NP-6R2NC	L1691444		1-	A	E1
NF6001	EMC FILTER				ACF451832-153-TD01	Q9000915		1-	A	C1
Q 6001	TRANSISTOR				GA4L4K-T1-A/JM	G3070443		1-	A	A1
Q 6002	IC				NJM2068V-TE1	G1094112		1-	A	A1
Q 6003	IC				NJM2068V-TE1	G1094112		1-	A	A1
Q 6004	IC				TC7W53FU(TE12L_F)	G1094158		1-	A	A1
Q 6005	IC				NJM2068V-TE1	G1094112		1-	A	A2
Q 6006	IC				ST16C550CQ48-F	G1094323		1-	A	D1
Q 6007	IC				NJM2068V-TE1	G1094112		1-	A	A1
Q 6008	IC				NJM2068V-TE1	G1094112		1-	A	A1
Q 6009	IC				NJM78L05UA-TE1	G1091325		1-	A	B2
Q 6011	IC				CS4272-CZZ	G1094319		1-	A	B2
Q 6012	IC				TPS62040DGQ	G1094328		1-	A	E1
Q 6013	IC				NJM2068V-TE1	G1094112		1-	A	A2
Q 6014	IC				TPS3808G01	G1094325		1-	A	E2
Q 6015	IC				TPS62040DGQ	G1094328		1-	A	E1
Q 6016	IC				NJM2068V-TE1	G1094112		1-	A	B1
Q 6017	IC				TPS3808G01	G1094325		1-	A	D1
Q 6019	IC				DAC7512N	G1094753		1-	A	B1
Q 6020	IC				TPS3808G01	G1094325		1-	A	E1
Q 6021	IC				TC7SH32FU(TE85L.F)	G1092729		1-	A	C2
Q 6022	IC				A29L400ATV-70F 0544	G1095028		1-	A	C2
Q 6022	IC				MX29LV400CTCC-70G 0544	G1095040		3-	A	C2
Q 6023	IC				TC7SH32FU(TE85L.F)	G1092729		1-	A	D1
Q 6024	IC				TMS320C6727BZDH300	G1094741		1-	A	C1
R 6001	CHIP RES.	8.2k	1/16W	1%	RMC1/16 822FTP	J24183822		1-	A	A1

REF	DESCRIPTION	VALUE	V/W	TOL.	MFR'S DESIG	YAESU P/N	VERS.	LOT	SIDE	LAY ADR
R 6002	CHIP RES.	82k	1/16W	1%	RMC1/16 823FTP	J24183823		1-	A	A1
R 6003	CHIP RES.	1k	1/16W	5%	RMC1/16 102JATP	J24185102		1-	A	A1
R 6004	CHIP RES.	39k	1/16W	1%	RMC1/16 393FTP	J24183393		1-	A	A1
R 6005	CHIP RES.	1k	1/16W	1%	RMC1/16 102FTP	J24183102		1-	A	A1
R 6006	CHIP RES.	100k	1/16W	5%	RMC1/16 104JATP	J24185104		1-	A	A1
R 6007	CHIP RES.	6.8k	1/16W	1%	RMC1/16 682FTP	J24183682		1-	A	A1
R 6008	CHIP RES.	1k	1/16W	1%	RMC1/16 102FTP	J24183102		1-	A	A1
R 6009	CHIP RES.	15k	1/16W	1%	RMC1/16 153FTP	J24183153		1-	A	A1
R 6010	CHIP RES.	47k	1/16W	1%	RMC1/16 473FTP	J24183473		1-	A	A2
R 6011	CHIP RES.	100	1/16W	1%	RMC1/16 101FTP	J24183101		1-	A	A2
R 6013	CHIP RES.	0	1/16W	5%	RMC1/16 000JATP	J24185000		1-	A	A2
R 6016	CHIP RES.	20k	1/16W	1%	RMC1/16 203FTP	J24183203		1-	A	A1
R 6017	CHIP RES.	15k	1/16W	1%	RMC1/16 153FTP	J24183153		1-	A	A1
R 6018	CHIP RES.	8.2k	1/16W	1%	RMC1/16 822FTP	J24183822		1-	A	A1
R 6019	CHIP RES.	6.8k	1/16W	1%	RMC1/16 682FTP	J24183682		1-	A	A2
R 6020	CHIP RES.	5.6k	1/16W	1%	RMC1/16 562FTP	J24183562		1-	A	A1
R 6021	CHIP RES.	15k	1/16W	1%	RMC1/16 153FTP	J24183153		1-	A	A2
R 6022	CHIP RES.	47k	1/16W	1%	RMC1/16 473FTP	J24183473		1-	A	A2
R 6023	CHIP RES.	100	1/16W	1%	RMC1/16 101FTP	J24183101		1-	A	A2
R 6024	CHIP RES.	47k	1/16W	5%	RMC1/16 473JATP	J24185473		1-	A	A1
R 6025	CHIP RES.	10	1/16W	5%	RMC1/16 100JATP	J24185100		1-	A	A1
R 6026	CHIP RES.	15k	1/16W	1%	RMC1/16 153FTP	J24183153		1-	A	A2
R 6027	CHIP RES.	5.6k	1/16W	1%	RMC1/16 562FTP	J24183562		1-	A	A1
R 6028	CHIP RES.	5.6k	1/16W	1%	RMC1/16 562FTP	J24183562		1-	A	A2
R 6029	CHIP RES.	8.2k	1/16W	1%	RMC1/16 822FTP	J24183822		1-	A	A2
R 6030	CHIP RES.	22k	1/16W	1%	RMC1/16 223FTP	J24183223		1-	A	A2
R 6031	CHIP RES.	39k	1/16W	1%	RMC1/16 393FTP	J24183393		1-	A	A2
R 6032	CHIP RES.	82k	1/16W	1%	RMC1/16 823FTP	J24183823		1-	A	A2
R 6033	CHIP RES.	10k	1/16W	5%	RMC1/16 103JATP	J24185103		1-	A	D1
R 6034	CHIP RES.	3.3k	1/16W	5%	RMC1/16 332JATP	J24185332		1-	A	D1
R 6035	CHIP RES.	33	1/16W	5%	RMC1/16 330JATP	J24185330		1-	A	D1
R 6036	CHIP RES.	33	1/16W	5%	RMC1/16 330JATP	J24185330		1-	A	D1
R 6037	CHIP RES.	10k	1/16W	5%	RMC1/16 103JATP	J24185103		1-	B	b1
R 6038	CHIP RES.	10k	1/16W	1%	RMC1/16 103FTP	J24183103		1-	A	A1
R 6039	CHIP RES.	4.7k	1/16W	1%	RMC1/16 472FTP	J24183472		1-	A	A1
R 6040	CHIP RES.	10k	1/16W	1%	RMC1/16 103FTP	J24183103		1-	A	A2
R 6041	CHIP RES.	2.2k	1/16W	1%	RMC1/16 222FTP	J24183222		1-	A	A1
R 6042	CHIP RES.	4.7k	1/16W	1%	RMC1/16 472FTP	J24183472		1-	A	A1
R 6043	CHIP RES.	2.2k	1/16W	1%	RMC1/16 222FTP	J24183222		1-	A	A1
R 6044	CHIP RES.	5.6k	1/16W	1%	RMC1/16 562FTP	J24183562		1-	A	A2
R 6045	CHIP RES.	8.2k	1/16W	1%	RMC1/16 822FTP	J24183822		1-	A	A2
R 6046	CHIP RES.	47k	1/16W	1%	RMC1/16 473FTP	J24183473		1-	A	B1
R 6047	CHIP RES.	1k	1/16W	1%	RMC1/16 102FTP	J24183102		1-	A	B1
R 6048	CHIP RES.	1.5k	1/16W	1%	RMC1/16 152FTP	J24183152		1-	A	B1
R 6049	CHIP RES.	4.7k	1/16W	1%	RMC1/16 472FTP	J24183472		1-	A	B1
R 6050	CHIP RES.	1k	1/16W	1%	RMC1/16 102FTP	J24183102		1-	A	B1
R 6051	CHIP RES.	1k	1/16W	1%	RMC1/16 102FTP	J24183102		1-	A	B1
R 6052	CHIP RES.	4.7k	1/16W	1%	RMC1/16 472FTP	J24183472		1-	A	B1
R 6053	CHIP RES.	1k	1/16W	1%	RMC1/16 102FTP	J24183102		1-	A	B1
R 6054	CHIP RES.	4.7k	1/16W	1%	RMC1/16 472FTP	J24183472		1-	A	A2
R 6055	CHIP RES.	4.7k	1/16W	1%	RMC1/16 472FTP	J24183472		1-	A	A2
R 6056	CHIP RES.	1k	1/16W	1%	RMC1/16 102FTP	J24183102		1-	A	B1
R 6057	CHIP RES.	4.7k	1/16W	1%	RMC1/16 472FTP	J24183472		1-	A	B2
R 6058	CHIP RES.	4.7k	1/16W	1%	RMC1/16 472FTP	J24183472		1-	A	A2
R 6059	CHIP RES.	4.7k	1/16W	1%	RMC1/16 472FTP	J24183472		1-	A	A2
R 6060	CHIP RES.	4.7k	1/16W	1%	RMC1/16 472FTP	J24183472		1-	A	B2
R 6061	CHIP RES.	4.7k	1/16W	1%	RMC1/16 472FTP	J24183472		1-	A	A2
R 6062	CHIP RES.	4.7k	1/16W	1%	RMC1/16 472FTP	J24183472		1-	A	B2
R 6063	CHIP RES.	4.7k	1/16W	1%	RMC1/16 472FTP	J24183472		1-	A	B2
R 6064	CHIP RES.	4.7k	1/16W	1%	RMC1/16 472FTP	J24183472		1-	A	A2
R 6065	CHIP RES.	4.7k	1/16W	1%	RMC1/16 472FTP	J24183472		1-	A	B2
R 6066	CHIP RES.	4.7k	1/16W	1%	RMC1/16 472FTP	J24183472		1-	A	B2
R 6067	CHIP RES.	7.5k	1/16W	1%	RMC1/16 752FTP	J24183752		1-	A	B1
R 6068	CHIP RES.	1k	1/16W	1%	RMC1/16 102FTP	J24183102		1-	A	B1
R 6069	CHIP RES.	0	1/16W	5%	RMC1/16 000JATP	J24185000		1-	A	C1
R 6070	CHIP RES.	1k	1/16W	1%	RMC1/16 102FTP	J24183102		1-	A	B1
R 6072	CHIP RES.	150k	1/16W	1%	RMC1/16 154FTP	J24183154		1-	A	E2
R 6073	CHIP RES.	15k	1/16W	1%	RMC1/16 153FTP	J24183153		1-	A	E2
R 6074	CHIP RES.	10k	1/16W	5%	RMC1/16 103JATP	J24185103		1-	A	E2
R 6075	CHIP RES.	4.7	1/4W	5%	RMC1/4 4R7JATP	J24245479		1-	A	E2
R 6076	CHIP RES.	4.7k	1/16W	5%	RMC1/16 472JATP	J24185472		1-	B	a1
R 6079	CHIP RES.	10k	1/16W	5%	RMC1/16 103JATP	J24185103		1-	A	C2
R 6081	CHIP RES.	10k	1/16W	5%	RMC1/16 103JATP	J24185103		1-	A	B1

REF	DESCRIPTION	VALUE	V/W	TOL.	MFR'S DESIG	YAESU P/N	VERS.	LOT	SIDE	LAY ADR
R 6082	CHIP RES.	10k	1/16W	5%	RMC1/16 103JATP	J24185103		1-	A	B1
R 6083	CHIP RES.	10k	1/16W	5%	RMC1/16 103JATP	J24185103		1-	A	B1
R 6084	CHIP RES.	10k	1/16W	5%	RMC1/16 103JATP	J24185103		1-	A	C1
R 6085	CHIP RES.	47k	1/16W	5%	RMC1/16 473JATP	J24185473		1-	A	B2
R 6086	CHIP RES.	4.7	1/16W	5%	RMC1/16 4R7JATP	J24185479		1-	A	B2
R 6087	CHIP RES.	100k	1/16W	5%	RMC1/16 104JATP	J24185104		1-	A	B1
R 6088	CHIP RES.	470k	1/16W	1%	RMC1/16 474FTP	J24183474		1-	B	a1
R 6089	CHIP RES.	270k	1/16W	1%	RMC1/16 274FTP	J24183274		1-	B	a1
R 6090	CHIP RES.	56k	1/16W	1%	RMC1/16 563FTP	J24183563		1-	B	a1
R 6091	CHIP RES.	100k	1/16W	1%	RMC1/16 104FTP	J24183104		1-	A	D1
R 6092	CHIP RES.	82k	1/16W	1%	RMC1/16 823FTP	J24183823		1-	A	D1
R 6093	CHIP RES.	100k	1/16W	1%	RMC1/16 104FTP	J24183104		1-	A	D1
R 6094	CHIP RES.	390k	1/16W	1%	RMC1/16 394FTP	J24183394		1-	B	a1
R 6095	CHIP RES.	68k	1/16W	1%	RMC1/16 683FTP	J24183683		1-	B	a1
R 6096	CHIP RES.	1k	1/16W	1%	RMC1/16 102FTP	J24183102		1-	B	a1
R 6097	CHIP RES.	33	1/16W	5%	RMC1/16 330JATP	J24185330		1-	A	B2
R 6098	CHIP RES.	560k	1/16W	1%	RMC1/16 564FTP	J24183564		1-	A	E1
R 6099	CHIP RES.	68k	1/16W	1%	RMC1/16 683FTP	J24183683		1-	A	E1
R 6100	CHIP RES.	100k	1/16W	1%	RMC1/16 104FTP	J24183104		1-	A	E1
R 6101	CHIP RES.	4.7k	1/16W	5%	RMC1/16 472JATP	J24185472		1-	A	E1
R 6102	CHIP RES.	10k	1/16W	5%	RMC1/16 103JATP	J24185103		1-	A	C2
R 6103	CHIP RES.	10k	1/16W	5%	RMC1/16 103JATP	J24185103		1-	A	B1
R 6104	CHIP RES.	10k	1/16W	5%	RMC1/16 103JATP	J24185103		1-	A	C1
R 6105	CHIP RES.	0	1/16W	5%	RMC1/16 000JATP	J24185000		1-	A	C1
R 6106	CHIP RES.	10k	1/16W	5%	RMC1/16 103JATP	J24185103		1-	A	C1
R 6107	CHIP RES.	0	1/16W	5%	RMC1/16 000JATP	J24185000		1-	A	C1
R 6109	CHIP RES.	33	1/16W	5%	RMC1/16 330JATP	J24185330		1-	A	C2
R 6110	CHIP RES.	10k	1/16W	5%	RMC1/16 103JATP	J24185103		1-	A	C1
R 6111	CHIP RES.	0	1/16W	5%	RMC1/16 000JATP	J24185000		1-	A	C1
R 6112	CHIP RES.	10k	1/16W	5%	RMC1/16 103JATP	J24185103		1-	A	C1
R 6113	CHIP RES.	33	1/16W	5%	RMC1/16 330JATP	J24185330		1-	A	C1
R 6114	CHIP RES.	33	1/16W	5%	RMC1/16 330JATP	J24185330		1-	A	C1
R 6115	CHIP RES.	10k	1/16W	5%	RMC1/16 103JATP	J24185103		1-	A	C1
R 6116	CHIP RES.	10k	1/16W	5%	RMC1/16 103JATP	J24185103		1-	A	C1
R 6117	CHIP RES.	10k	1/16W	5%	RMC1/16 103JATP	J24185103		1-	A	C1
R 6120	CHIP RES.	10k	1/16W	5%	RMC1/16 103JATP	J24185103		1-	A	C1
R 6121	CHIP RES.	10k	1/16W	5%	RMC1/16 103JATP	J24185103		1-	A	C1
R 6122	CHIP RES.	10k	1/16W	5%	RMC1/16 103JATP	J24185103		1-	A	C1
R 6124	CHIP RES.	10k	1/16W	5%	RMC1/16 103JATP	J24185103		1-	A	B2
R 6125	CHIP RES.	10k	1/16W	5%	RMC1/16 103JATP	J24185103		1-	A	C1
R 6126	CHIP RES.	10k	1/16W	5%	RMC1/16 103JATP	J24185103		1-	A	C2
R 6127	CHIP RES.	10k	1/16W	5%	RMC1/16 103JATP	J24185103		1-	A	C2
R 6128	CHIP RES.	10k	1/16W	5%	RMC1/16 103JATP	J24185103		1-	A	C2
R 6129	CHIP RES.	4.7k	1/16W	5%	RMC1/16 472JATP	J24185472		1-	A	C2
R 6130	CHIP RES.	4.7k	1/16W	5%	RMC1/16 472JATP	J24185472		1-	A	B2
S 6001	TACT SWITCH				SKQYPAE010	N5090144		1-	A	E2
X 6001	XTAL OSC	18.432MHz			TPS18XC-E1 18.432MHZ	H9501010		1-	A	B2

DISPLAY-1-UNIT

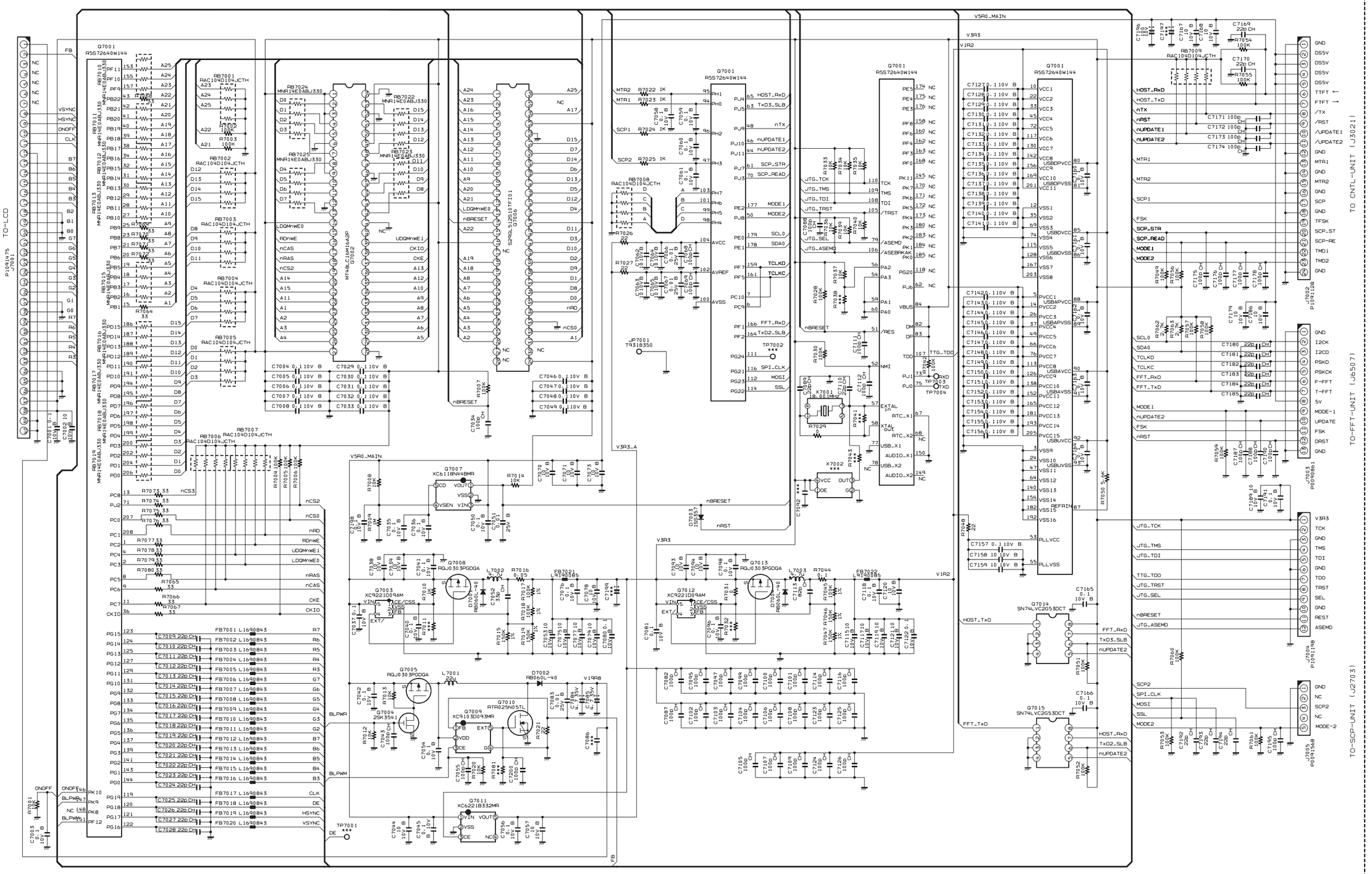

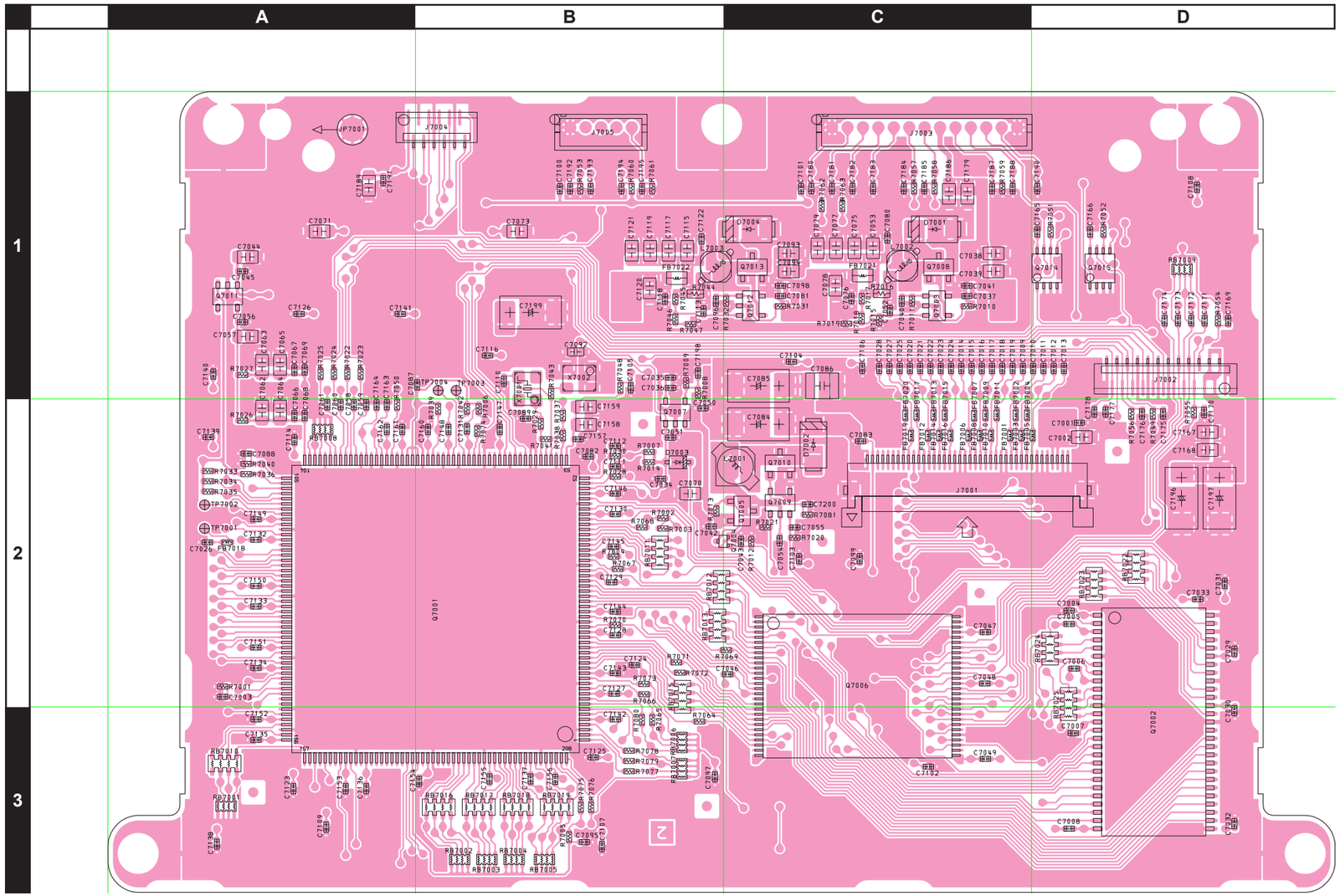
A
B
C
D
1
2
3

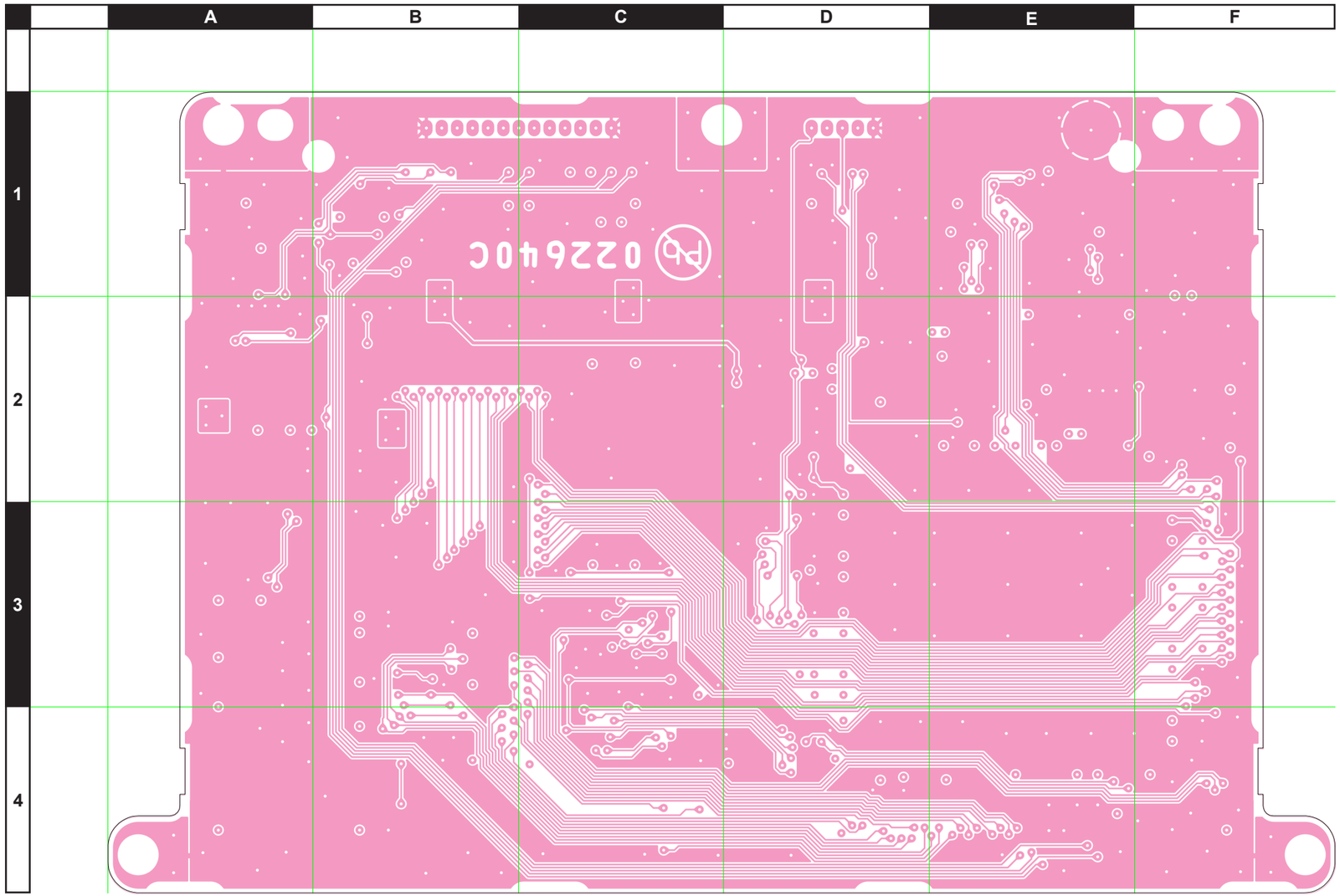
A
B
C
D
E
F
1
2
3
4

REF	DESCRIPTION	VALUE	V/W	TOL.	MFR'S DESIG	YAESU P/N	VERS.	LOT	SIDE	LAY ADR
	PCB with Components					CB6375001				
C 7001	CHIP CAP.	0.1uF	10V	B	GRM155B11A104KA01D	K22108802		1-	A	D2
C 7002	CHIP CAP.	10uF	10V	B	GRM21BB31A106KE18L	K22100808		1-	A	D2
C 7003	CHIP CAP.	0.1uF	10V	B	GRM155B11A104KA01D	K22108802		1-	A	A2
C 7004	CHIP CAP.	0.1uF	10V	B	GRM155B11A104KA01D	K22108802		1-	A	D2
C 7005	CHIP CAP.	0.1uF	10V	B	GRM155B11A104KA01D	K22108802		1-	A	D2
C 7006	CHIP CAP.	0.1uF	10V	B	GRM155B11A104KA01D	K22108802		1-	A	D2
C 7007	CHIP CAP.	0.1uF	10V	B	GRM155B11A104KA01D	K22108802		1-	A	D3
C 7008	CHIP CAP.	0.1uF	10V	B	GRM155B11A104KA01D	K22108802		1-	A	D3
C 7009	CHIP CAP.	22pF	50V	CH	GRM1552C1H220JA01D	K22178220		1-	A	C1
C 7010	CHIP CAP.	22pF	50V	CH	GRM1552C1H220JA01D	K22178220		1-	A	D1
C 7011	CHIP CAP.	22pF	50V	CH	GRM1552C1H220JA01D	K22178220		1-	A	D1
C 7012	CHIP CAP.	22pF	50V	CH	GRM1552C1H220JA01D	K22178220		1-	A	D1
C 7013	CHIP CAP.	22pF	50V	CH	GRM1552C1H220JA01D	K22178220		1-	A	D1
C 7014	CHIP CAP.	22pF	50V	CH	GRM1552C1H220JA01D	K22178220		1-	A	C1
C 7015	CHIP CAP.	22pF	50V	CH	GRM1552C1H220JA01D	K22178220		1-	A	C1
C 7016	CHIP CAP.	22pF	50V	CH	GRM1552C1H220JA01D	K22178220		1-	A	C1
C 7017	CHIP CAP.	22pF	50V	CH	GRM1552C1H220JA01D	K22178220		1-	A	C1
C 7018	CHIP CAP.	22pF	50V	CH	GRM1552C1H220JA01D	K22178220		1-	A	C1
C 7019	CHIP CAP.	22pF	50V	CH	GRM1552C1H220JA01D	K22178220		1-	A	C1
C 7020	CHIP CAP.	22pF	50V	CH	GRM1552C1H220JA01D	K22178220		1-	A	C1
C 7021	CHIP CAP.	22pF	50V	CH	GRM1552C1H220JA01D	K22178220		1-	A	C1
C 7022	CHIP CAP.	22pF	50V	CH	GRM1552C1H220JA01D	K22178220		1-	A	C1
C 7023	CHIP CAP.	22pF	50V	CH	GRM1552C1H220JA01D	K22178220		1-	A	C1
C 7024	CHIP CAP.	22pF	50V	CH	GRM1552C1H220JA01D	K22178220		1-	A	C1
C 7025	CHIP CAP.	22pF	50V	CH	GRM1552C1H220JA01D	K22178220		1-	A	C1
C 7026	CHIP CAP.	22pF	50V	CH	GRM1552C1H220JA01D	K22178220		1-	A	A2
C 7027	CHIP CAP.	22pF	50V	CH	GRM1552C1H220JA01D	K22178220		1-	A	C1
C 7028	CHIP CAP.	22pF	50V	CH	GRM1552C1H220JA01D	K22178220		1-	A	C1
C 7029	CHIP CAP.	0.1uF	10V	B	GRM155B11A104KA01D	K22108802		1-	A	D2
C 7030	CHIP CAP.	0.1uF	10V	B	GRM155B11A104KA01D	K22108802		1-	A	D3
C 7031	CHIP CAP.	0.1uF	10V	B	GRM155B11A104KA01D	K22108802		1-	A	D2
C 7032	CHIP CAP.	0.1uF	10V	B	GRM155B11A104KA01D	K22108802		1-	A	D3
C 7033	CHIP CAP.	0.1uF	10V	B	GRM155B11A104KA01D	K22108802		1-	A	D2
C 7034	CHIP CAP.	100pF	50V	CH	GRM1552C1H101JA01D	K22178236		1-	A	B2
C 7035	CHIP CAP.	0.1uF	10V	B	GRM155B11A104KA01D	K22108802		1-	A	B1
C 7036	CHIP CAP.	0.1uF	10V	B	GRM155B11A104KA01D	K22108802		1-	A	B1
C 7037	CHIP CAP.	0.1uF	10V	B	GRM155B11A104KA01D	K22108802		1-	A	C1
C 7038	CHIP CAP.	10uF	10V	B	GRM21BB31A106KE18L	K22100808		1-	A	C1
C 7039	CHIP CAP.	10uF	10V	B	GRM21BB31A106KE18L	K22100808		1-	A	C1
C 7040	CHIP CAP.	0.1uF	10V	B	GRM155B11A104KA01D	K22108802		1-	A	C1
C 7041	CHIP CAP.	0.1uF	10V	B	GRM155B11A104KA01D	K22108802		1-	A	C1
C 7042	CHIP CAP.	0.1uF	10V	B	GRM155B11A104KA01D	K22108802		1-	A	B2
C 7043	CHIP CAP.	100pF	50V	CH	GRM1552C1H101JA01D	K22178236		1-	A	C2
C 7044	CHIP CAP.	10uF	10V	B	GRM21BB31A106KE18L	K22100808		1-	A	A1
C 7045	CHIP CAP.	0.1uF	10V	B	GRM155B11A104KA01D	K22108802		1-	A	A1
C 7046	CHIP CAP.	0.1uF	10V	B	GRM155B11A104KA01D	K22108802		1-	A	C2
C 7047	CHIP CAP.	0.1uF	10V	B	GRM155B11A104KA01D	K22108802		1-	A	C2
C 7048	CHIP CAP.	0.1uF	10V	B	GRM155B11A104KA01D	K22108802		1-	A	C2
C 7049	CHIP CAP.	0.1uF	10V	B	GRM155B11A104KA01D	K22108802		1-	A	C3
C 7050	CHIP CAP.	0.1uF	10V	B	GRM155B11A104KA01D	K22108802		1-	A	B2
C 7051	CHIP CAP.	0.01uF	25V	B	GRM155B11E103KA01D	K22148834		1-	A	B2
C 7052	CHIP CAP.	33pF	50V	CH	GRM1552C1H330JA01D	K22178224		1-	A	C1
C 7053	CHIP CAP.	10uF	10V	B	GRM21BB31A106KE18L	K22100808		1-	A	C1
C 7054	CHIP CAP.	0.1uF	10V	B	GRM155B11A104KA01D	K22108802		1-	A	C2
C 7055	CHIP CAP.	100pF	50V	CH	GRM1552C1H101JA01D	K22178236		1-	A	C2
C 7056	CHIP CAP.	0.1uF	10V	B	GRM155B11A104KA01D	K22108802		1-	A	A1
C 7057	CHIP CAP.	10uF	10V	B	GRM21BB31A106KE18L	K22100808		1-	A	A1
C 7058	CHIP CAP.	0.1uF	10V	B	GRM155B11A104KA01D	K22108802		1-	A	A2
C 7059	CHIP CAP.	0.1uF	10V	B	GRM155B11A104KA01D	K22108802		1-	A	A2
C 7060	CHIP CAP.	0.1uF	10V	B	GRM155B11A104KA01D	K22108802		1-	A	A2
C 7061	CHIP CAP.	0.1uF	10V	B	GRM155B11A104KA01D	K22108802		1-	A	A2
C 7062	CHIP CAP.	10uF	10V	B	GRM21BB31A106KE18L	K22100808		1-	A	A2
C 7063	CHIP CAP.	10uF	10V	B	GRM21BB31A106KE18L	K22100808		1-	A	A1
C 7064	CHIP CAP.	10uF	10V	B	GRM21BB31A106KE18L	K22100808		1-	A	A2
C 7065	CHIP CAP.	10uF	10V	B	GRM21BB31A106KE18L	K22100808		1-	A	A1
C 7066	CHIP CAP.	0.01uF	25V	B	GRM155B11E103KA01D	K22148834		1-	A	A2
C 7067	CHIP CAP.	0.01uF	25V	B	GRM155B11E103KA01D	K22148834		1-	A	A1
C 7068	CHIP CAP.	100pF	50V	CH	GRM1552C1H101JA01D	K22178236		1-	A	A2
C 7069	CHIP CAP.	100pF	50V	CH	GRM1552C1H101JA01D	K22178236		1-	A	A1
C 7070	CHIP CAP.	10uF	10V	B	GRM21BB31A106KE18L	K22100808		1-	A	B2
C 7071	CHIP CAP.	10uF	10V	B	GRM21BB31A106KE18L	K22100808		1-	A	A1
C 7073	CHIP CAP.	10uF	10V	B	GRM21BB31A106KE18L	K22100808		1-	A	B1

REF	DESCRIPTION	VALUE	V/W	TOL.	MFR'S DESIG	YAESU P/N	VERS.	LOT	SIDE	LAY ADR
C 7075	CHIP CAP.	10uF	10V	B	GRM21BB31A106KE18L	K22100808		1-	A	C1
C 7076	CHIP CAP.	0.1uF	10V	B	GRM155B11A104KA01D	K22108802		1-	A	C1
C 7077	CHIP CAP.	10uF	10V	B	GRM21BB31A106KE18L	K22100808		1-	A	C1
C 7078	CHIP CAP.	10uF	10V	B	GRM21BB31A106KE18L	K22100808		1-	A	C1
C 7079	CHIP CAP.	10uF	10V	B	GRM21BB31A106KE18L	K22100808		1-	A	C1
C 7080	CHIP CAP.	0.1uF	10V	B	GRM155B11A104KA01D	K22108802		1-	A	C1
C 7081	CHIP CAP.	0.1uF	10V	B	GRM155B11A104KA01D	K22108802		1-	A	C1
C 7082	CHIP CAP.	100pF	50V	CH	GRM1552C1H101JA01D	K22178236		1-	A	B2
C 7083	CHIP CAP.	0.01uF	25V	B	GRM155B11E103KA01D	K22148834		1-	A	C2
C 7084	CHIP TA.CAP.	4.7uF	35V		TEESVC1V475M12R	K78160036		1-	A	C2
C 7085	CHIP TA.CAP.	4.7uF	35V		TEESVC1V475M12R	K78160036		1-	A	C1
C 7087	CHIP CAP.	100pF	50V	CH	GRM1552C1H101JA01D	K22178236		1-	A	B1
C 7088	CHIP CAP.	100pF	50V	CH	GRM1552C1H101JA01D	K22178236		1-	A	A2
C 7089	CHIP CAP.	22pF	50V	CH	GRM1552C1H220JA01D	K22178220		1-	A	B2
C 7093	CHIP CAP.	10uF	10V	B	GRM21BB31A106KE18L	K22100808		1-	A	C1
C 7094	CHIP CAP.	10uF	10V	B	GRM21BB31A106KE18L	K22100808		1-	A	C1
C 7095	CHIP CAP.	100pF	50V	CH	GRM1552C1H101JA01D	K22178236		1-	A	B3
C 7096	CHIP CAP.	0.1uF	10V	B	GRM155B11A104KA01D	K22108802		1-	A	B1
C 7097	CHIP CAP.	100pF	50V	CH	GRM1552C1H101JA01D	K22178236		1-	A	B3
C 7098	CHIP CAP.	0.1uF	10V	B	GRM155B11A104KA01D	K22108802		1-	A	C1
C 7099	CHIP CAP.	100pF	50V	CH	GRM1552C1H101JA01D	K22178236		1-	A	C2
C 7100	CHIP CAP.	100pF	50V	CH	GRM1552C1H101JA01D	K22178236		1-	A	B1
C 7101	CHIP CAP.	100pF	50V	CH	GRM1552C1H101JA01D	K22178236		1-	A	C1
C 7102	CHIP CAP.	100pF	50V	CH	GRM1552C1H101JA01D	K22178236		1-	A	C3
C 7103	CHIP CAP.	100pF	50V	CH	GRM1552C1H101JA01D	K22178236		1-	A	C2
C 7104	CHIP CAP.	100pF	50V	CH	GRM1552C1H101JA01D	K22178236		1-	A	C1
C 7105	CHIP CAP.	100pF	50V	CH	GRM1552C1H101JA01D	K22178236		1-	A	B1
C 7106	CHIP CAP.	100pF	50V	CH	GRM1552C1H101JA01D	K22178236		1-	A	C1
C 7107	CHIP CAP.	100pF	50V	CH	GRM1552C1H101JA01D	K22178236		1-	A	B3
C 7108	CHIP CAP.	100pF	50V	CH	GRM1552C1H101JA01D	K22178236		1-	A	D1
C 7109	CHIP CAP.	100pF	50V	CH	GRM1552C1H101JA01D	K22178236		1-	A	A3
C 7110	CHIP CAP.	22pF	50V	CH	GRM1552C1H220JA01D	K22178220		1-	A	B1
C 7111	CHIP CAP.	100pF	50V	CH	GRM1552C1H101JA01D	K22178236		1-	A	B2
C 7112	CHIP CAP.	100pF	50V	CH	GRM1552C1H101JA01D	K22178236		1-	A	B2
C 7113	CHIP CAP.	82pF	50V	CH	GRM1552C1H820JA01D	K22178234		1-	A	B1
C 7114	CHIP CAP.	100pF	50V	CH	GRM1552C1H101JA01D	K22178236		1-	A	A2
C 7115	CHIP CAP.	10uF	10V	B	GRM21BB31A106KE18L	K22100808		1-	A	B1
C 7116	CHIP CAP.	100pF	50V	CH	GRM1552C1H101JA01D	K22178236		1-	A	B1
C 7117	CHIP CAP.	10uF	10V	B	GRM21BB31A106KE18L	K22100808		1-	A	B1
C 7118	CHIP CAP.	0.1uF	10V	B	GRM155B11A104KA01D	K22108802		1-	A	B1
C 7119	CHIP CAP.	10uF	10V	B	GRM21BB31A106KE18L	K22100808		1-	A	B1
C 7120	CHIP CAP.	10uF	10V	B	GRM21BB31A106KE18L	K22100808		1-	A	B1
C 7121	CHIP CAP.	10uF	10V	B	GRM21BB31A106KE18L	K22100808		1-	A	B1
C 7122	CHIP CAP.	0.1uF	10V	B	GRM155B11A104KA01D	K22108802		1-	A	B1
C 7123	CHIP CAP.	100pF	50V	CH	GRM1552C1H101JA01D	K22178236		1-	A	A3
C 7124	CHIP CAP.	100pF	50V	CH	GRM1552C1H101JA01D	K22178236		1-	A	B2
C 7125	CHIP CAP.	100pF	50V	CH	GRM1552C1H101JA01D	K22178236		1-	A	B3
C 7126	CHIP CAP.	100pF	50V	CH	GRM1552C1H101JA01D	K22178236		1-	A	A1
C 7127	CHIP CAP.	0.1uF	10V	B	GRM155B11A104KA01D	K22108802		1-	A	B2
C 7128	CHIP CAP.	0.1uF	10V	B	GRM155B11A104KA01D	K22108802		1-	A	B2
C 7129	CHIP CAP.	0.1uF	10V	B	GRM155B11A104KA01D	K22108802		1-	A	B2
C 7130	CHIP CAP.	0.1uF	10V	B	GRM155B11A104KA01D	K22108802		1-	A	B2
C 7131	CHIP CAP.	0.1uF	10V	B	GRM155B11A104KA01D	K22108802		1-	A	B2
C 7132	CHIP CAP.	0.1uF	10V	B	GRM155B11A104KA01D	K22108802		1-	A	A2
C 7133	CHIP CAP.	0.1uF	10V	B	GRM155B11A104KA01D	K22108802		1-	A	A2
C 7134	CHIP CAP.	0.1uF	10V	B	GRM155B11A104KA01D	K22108802		1-	A	A2
C 7135	CHIP CAP.	0.1uF	10V	B	GRM155B11A104KA01D	K22108802		1-	A	A3
C 7136	CHIP CAP.	0.1uF	10V	B	GRM155B11A104KA01D	K22108802		1-	A	A3
C 7137	CHIP CAP.	0.1uF	10V	B	GRM155B11A104KA01D	K22108802		1-	A	B3
C 7138	CHIP CAP.	0.1uF	10V	B	GRM155B11A104KA01D	K22108802		1-	A	A3
C 7139	CHIP CAP.	0.1uF	10V	B	GRM155B11A104KA01D	K22108802		1-	A	A2
C 7140	CHIP CAP.	0.1uF	10V	B	GRM155B11A104KA01D	K22108802		1-	A	A1
C 7141	CHIP CAP.	0.1uF	10V	B	GRM155B11A104KA01D	K22108802		1-	A	A1
C 7142	CHIP CAP.	0.1uF	10V	B	GRM155B11A104KA01D	K22108802		1-	A	B3
C 7143	CHIP CAP.	0.1uF	10V	B	GRM155B11A104KA01D	K22108802		1-	A	B2
C 7144	CHIP CAP.	0.1uF	10V	B	GRM155B11A104KA01D	K22108802		1-	A	B2
C 7145	CHIP CAP.	0.1uF	10V	B	GRM155B11A104KA01D	K22108802		1-	A	B2
C 7146	CHIP CAP.	0.1uF	10V	B	GRM155B11A104KA01D	K22108802		1-	A	B2
C 7147	CHIP CAP.	0.1uF	10V	B	GRM155B11A104KA01D	K22108802		1-	A	B2
C 7148	CHIP CAP.	0.1uF	10V	B	GRM155B11A104KA01D	K22108802		1-	A	B2
C 7149	CHIP CAP.	0.1uF	10V	B	GRM155B11A104KA01D	K22108802		1-	A	A2
C 7150	CHIP CAP.	0.1uF	10V	B	GRM155B11A104KA01D	K22108802		1-	A	A2
C 7151	CHIP CAP.	0.1uF	10V	B	GRM155B11A104KA01D	K22108802		1-	A	A2

REF	DESCRIPTION	VALUE	V/W	TOL.	MFR'S DESIG	YAESU P/N	VERS.	LOT	SIDE	LAY ADR
C 7152	CHIP CAP.	0.1uF	10V	B	GRM155B11A104KA01D	K22108802		1-	A	A3
C 7153	CHIP CAP.	0.1uF	10V	B	GRM155B11A104KA01D	K22108802		1-	A	A3
C 7154	CHIP CAP.	0.1uF	10V	B	GRM155B11A104KA01D	K22108802		1-	A	B3
C 7155	CHIP CAP.	0.1uF	10V	B	GRM155B11A104KA01D	K22108802		1-	A	B3
C 7156	CHIP CAP.	0.1uF	10V	B	GRM155B11A104KA01D	K22108802		1-	A	B3
C 7157	CHIP CAP.	0.1uF	10V	B	GRM155B11A104KA01D	K22108802		1-	A	B2
C 7158	CHIP CAP.	10uF	10V	B	GRM21BB31A106KE18L	K22100808		1-	A	B2
C 7159	CHIP CAP.	10uF	10V	B	GRM21BB31A106KE18L	K22100808		1-	A	B2
C 7160	CHIP CAP.	0.1uF	10V	B	GRM155B11A104KA01D	K22108802		1-	A	B2
C 7161	CHIP CAP.	0.1uF	10V	B	GRM155B11A104KA01D	K22108802		1-	A	A2
C 7162	CHIP CAP.	0.1uF	10V	B	GRM155B11A104KA01D	K22108802		1-	A	A2
C 7163	CHIP CAP.	0.1uF	10V	B	GRM155B11A104KA01D	K22108802		1-	A	A2
C 7164	CHIP CAP.	0.1uF	10V	B	GRM155B11A104KA01D	K22108802		1-	A	A2
C 7165	CHIP CAP.	0.1uF	10V	B	GRM155B11A104KA01D	K22108802		1-	A	D1
C 7166	CHIP CAP.	0.1uF	10V	B	GRM155B11A104KA01D	K22108802		1-	A	D1
C 7167	CHIP CAP.	10uF	10V	B	GRM21BB31A106KE18L	K22100808		1-	A	D2
C 7168	CHIP CAP.	10uF	10V	B	GRM21BB31A106KE18L	K22100808		1-	A	D2
C 7169	CHIP CAP.	22pF	50V	CH	GRM1552C1H220JA01D	K22178220		1-	A	D1
C 7170	CHIP CAP.	22pF	50V	CH	GRM1552C1H220JA01D	K22178220		1-	A	D2
C 7171	CHIP CAP.	100pF	50V	CH	GRM1552C1H101JA01D	K22178236		1-	A	D1
C 7172	CHIP CAP.	100pF	50V	CH	GRM1552C1H101JA01D	K22178236		1-	A	D1
C 7173	CHIP CAP.	100pF	50V	CH	GRM1552C1H101JA01D	K22178236		1-	A	D1
C 7174	CHIP CAP.	100pF	50V	CH	GRM1552C1H101JA01D	K22178236		1-	A	D1
C 7175	CHIP CAP.	100pF	50V	CH	GRM1552C1H101JA01D	K22178236		1-	A	D2
C 7176	CHIP CAP.	100pF	50V	CH	GRM1552C1H101JA01D	K22178236		1-	A	D2
C 7177	CHIP CAP.	100pF	50V	CH	GRM1552C1H101JA01D	K22178236		1-	A	D2
C 7178	CHIP CAP.	100pF	50V	CH	GRM1552C1H101JA01D	K22178236		1-	A	D2
C 7179	CHIP CAP.	10uF	10V	B	GRM21BB31A106KE18L	K22100808		1-	A	C1
C 7180	CHIP CAP.	22pF	50V	CH	GRM1552C1H220JA01D	K22178220		1-	A	C1
C 7181	CHIP CAP.	22pF	50V	CH	GRM1552C1H220JA01D	K22178220		1-	A	C1
C 7182	CHIP CAP.	22pF	50V	CH	GRM1552C1H220JA01D	K22178220		1-	A	C1
C 7182	CHIP RES.	100k	1/16W	5%	RMC1/16S 104JTH	J24189049		4-	A	C1
C 7183	CHIP CAP.	22pF	50V	CH	GRM1552C1H220JA01D	K22178220		1-	A	C1
C 7183	CHIP RES.	100k	1/16W	5%	RMC1/16S 104JTH	J24189049		4-	A	C1
C 7184	CHIP CAP.	22pF	50V	CH	GRM1552C1H220JA01D	K22178220		1-	A	C1
C 7185	CHIP CAP.	22pF	50V	CH	GRM1552C1H220JA01D	K22178220		1-	A	C1
C 7186	CHIP CAP.	10uF	10V	B	GRM21BB31A106KE18L	K22100808		1-	A	C1
C 7187	CHIP CAP.	100pF	50V	CH	GRM1552C1H101JA01D	K22178236		1-	A	C1
C 7188	CHIP CAP.	100pF	50V	CH	GRM1552C1H101JA01D	K22178236		1-	A	C1
C 7189	CHIP CAP.	10uF	10V	B	GRM21BB31A106KE18L	K22100808		1-	A	A1
C 7190	CHIP CAP.	100pF	50V	CH	GRM1552C1H101JA01D	K22178236		1-	A	D1
C 7191	CHIP CAP.	0.1uF	10V	B	GRM155B11A104KA01D	K22108802		1-	A	A1
C 7192	CHIP CAP.	22pF	50V	CH	GRM1552C1H220JA01D	K22178220		1-	A	B1
C 7193	CHIP CAP.	22pF	50V	CH	GRM1552C1H220JA01D	K22178220		1-	A	B1
C 7194	CHIP CAP.	22pF	50V	CH	GRM1552C1H220JA01D	K22178220		1-	A	B1
C 7195	CHIP CAP.	100pF	50V	CH	GRM1552C1H101JA01D	K22178236		1-	A	B1
C 7196	CHIP TA.CAP.	100uF	10V		TEESVC1A107M12R	K78100075		1	A	D2
C 7196	CHIP TA.CAP.	100uF	10V		TPSC107M010R0200	K78100121		2-	A	D2
C 7198	CHIP CAP.	0.1uF	10V	B	GRM155B11A104KA01D	K22108802		1-	A	B1
C 7200	CHIP CAP.	100pF	50V	CH	GRM1552C1H101JA01D	K22178236		1-	A	C2
D 7001	DIODE				RB060L-40 TE25	G2070744		1-	A	C1
D 7002	DIODE				RB060L-40 TE25	G2070744		1-	A	C2
D 7003	DIODE				1SS357(TPH3.F)	G2070346		1-	A	B2
D 7004	DIODE				RB060L-40 TE25	G2070744		1-	A	C1
DS7001	LCD MODULE				GKTY43SNAH2E1	Q7000665A		1-		
FB7001	FERRITE BEADS				BLM15AG121SN1D	L1690843		1-	A	C2
FB7002	FERRITE BEADS				BLM15AG121SN1D	L1690843		1-	A	C2
FB7003	FERRITE BEADS				BLM15AG121SN1D	L1690843		1-	A	C2
FB7004	FERRITE BEADS				BLM15AG121SN1D	L1690843		1-	A	C2
FB7005	FERRITE BEADS				BLM15AG121SN1D	L1690843		1-	A	D2
FB7006	FERRITE BEADS				BLM15AG121SN1D	L1690843		1-	A	C2
FB7007	FERRITE BEADS				BLM15AG121SN1D	L1690843		1-	A	C2
FB7008	FERRITE BEADS				BLM15AG121SN1D	L1690843		1-	A	C2
FB7009	FERRITE BEADS				BLM15AG121SN1D	L1690843		1-	A	C2
FB7010	FERRITE BEADS				BLM15AG121SN1D	L1690843		1-	A	C2
FB7011	FERRITE BEADS				BLM15AG121SN1D	L1690843		1-	A	C2
FB7012	FERRITE BEADS				BLM15AG121SN1D	L1690843		1-	A	C2
FB7013	FERRITE BEADS				BLM15AG121SN1D	L1690843		1-	A	C2
FB7014	FERRITE BEADS				BLM15AG121SN1D	L1690843		1-	A	C2
FB7015	FERRITE BEADS				BLM15AG121SN1D	L1690843		1-	A	C2
FB7016	FERRITE BEADS				BLM15AG121SN1D	L1690843		1-	A	C2
FB7017	FERRITE BEADS				BLM15AG121SN1D	L1690843		1-	A	C2
FB7018	FERRITE BEADS				BLM15AG121SN1D	L1690843		1-	A	A2

REF	DESCRIPTION	VALUE	V/W	TOL.	MFR'S DESIG	YAESU P/N	VERS.	LOT	SIDE	LAY ADR
FB7019	FERRITE BEADS				BLM15AG121SN1D	L1690843		1-	A	C2
FB7020	FERRITE BEADS				BLM15AG121SN1D	L1690843		1-	A	C2
FB7021	FERRITE BEADS				BK2125HS601-T	L9190085		1-	A	C1
FB7022	FERRITE BEADS				BK2125HS601-T	L9190085		1-	A	B1
J 7001	CONNECTOR				FH12A-40S-0.5SH(55)	P1091475		1-	A	C2
J 7002	CONNECTOR				24FLT-SM2-TB(LF)(SN)(M)	P1091128		1-	A	D1
J 7003	CONNECTOR				B13B-ZR(LF)(SN)	P0090861		1-	A	C1
J 7004	CONNECTOR				12FLT-SM2-TB(LF)(SN)	P1091198		1-	A	B1
JP7001	WIRE ASSY				BLK 70 SIN/R1.25	T9318350		1-	A	A1
L 7001	CHIP COIL	22uH		20%	CDRH3D23HPNP-220MC	L1691733		1-	A	C2
L 7002	M.RFC	4.7uH			7E03LA-4R7N-RB	L1691583		1-	A	C1
L 7003	M.RFC	4.7uH			7E03LA-4R7N-RB	L1691583		1-	A	B1
Q 7001	IC				R5S72640W144FPU	G1094961		1-	A	B2
Q 7002	IC				MT48LC16M16A2P-75 IT:D	G1094990		1-	A	D3
Q 7003	IC				XC9221D09AMR	G1094819		1-	A	C1
Q 7004	FET				2SK3541 T2L	G3835417		1-	A	B2
Q 7005	FET				RQJ0303PGDQA	G3070449		1-	A	C2
Q 7006	IC				S29GL512S10TFI010	G1094991		1-	A	C2
Q 7007	IC				XC6118N44BMR-G	G1094972		1-	A	B2
Q 7008	FET				RQJ0303PGDQA	G3070449		1-	A	C1
Q 7009	IC				XC9103D093MR-G	G1094967		1-	A	C2
Q 7010	FET				RTR025N05TL	G3070436		1-	A	C2
Q 7011	IC				XC6221B332MR-G	G1094968		1-	A	A1
Q 7012	IC				XC9221D09AMR	G1094819		1-	A	C1
Q 7013	FET				RQJ0303PGDQA	G3070449		1-	A	C1
Q 7014	IC				SN74LVC2G53DCTR	G1094048		1-	A	D1
Q 7015	IC				SN74LVC2G53DCTR	G1094048		1-	A	D1
R 7001	CHIP RES.	10k	1/16W	5%	RMC1/16S 103JTH	J24189037		1-	A	A2
R 7002	CHIP RES.	100k	1/16W	5%	RMC1/16S 104JTH	J24189049		1-	A	B2
R 7003	CHIP RES.	100k	1/16W	5%	RMC1/16S 104JTH	J24189049		1-	A	B2
R 7004	CHIP RES.	100k	1/16W	5%	RMC1/16S 104JTH	J24189049		1-	A	B2
R 7005	CHIP RES.	100k	1/16W	5%	RMC1/16S 104JTH	J24189049		1-	A	B3
R 7006	CHIP RES.	100k	1/16W	5%	RMC1/16S 104JTH	J24189049		1-	A	B2
R 7007	CHIP RES.	100k	1/16W	5%	RMC1/16S 104JTH	J24189049		1-	A	B2
R 7008	CHIP RES.	10k	1/16W	5%	RMC1/16S 103JTH	J24189037		1-	A	B1
R 7009	CHIP RES.	1M	1/16W	5%	RMC1/16S 105JTH	J24189061		1-	A	B1
R 7010	CHIP RES.	1k	1/16W	5%	RMC1/16S 102JTH	J24189025		1-	A	C1
R 7012	CHIP RES.	10k	1/16W	5%	RMC1/16S 103JTH	J24189037		1-	A	C2
R 7013	CHIP RES.	10k	1/16W	5%	RMC1/16S 103JTH	J24189037		1-	A	B2
R 7014	CHIP RES.	10k	1/16W	5%	RMC1/16S 103JTH	J24189037		1-	A	B2
R 7015	CHIP RES.	150k	1/16W	1%	RMC1/16SK154FTH	J24189531		1-	A	C1
R 7016	CHIP RES.	0.05	1/4W	5%	RCC16R050JTP	J24249005		1-	A	C1
R 7017	CHIP RES.	100k	1/16W	1%	RMC1/16SK104FTH	J24189529		1-	A	C1
R 7018	CHIP RES.	100k	1/16W	1%	RMC1/16SK104FTH	J24189529		1-	A	C1
R 7019	CHIP RES.	150k	1/16W	1%	RMC1/16SK154FTH	J24189531		1-	A	C1
R 7020	CHIP RES.	10k	1/16W	5%	RMC1/16S 103JTH	J24189037		1-	A	C2
R 7021	CHIP RES.	22	1/16W	5%	RMC1/16S 220JTH	J24189005		1-	A	C2
R 7022	CHIP RES.	1k	1/16W	5%	RMC1/16S 102JTH	J24189025		1-	A	A1
R 7023	CHIP RES.	1k	1/16W	5%	RMC1/16S 102JTH	J24189025		1-	A	A1
R 7024	CHIP RES.	1k	1/16W	5%	RMC1/16S 102JTH	J24189025		1-	A	A1
R 7025	CHIP RES.	1k	1/16W	5%	RMC1/16S 102JTH	J24189025		1-	A	A1
R 7026	CHIP RES.	22	1/16W	5%	RMC1/16S 220JTH	J24189005		1-	A	A2
R 7027	CHIP RES.	22	1/16W	5%	RMC1/16S 220JTH	J24189005		1-	A	A1
R 7028	CHIP RES.	100k	1/16W	5%	RMC1/16S 104JTH	J24189049		1-	A	B2
R 7029	CHIP RES.	0	1/16W	5%	RMC1/16S JPTH	J24189070		1-	A	B2
R 7030	CHIP RES.	100k	1/16W	5%	RMC1/16S 104JTH	J24189049		1-	A	B2
R 7031	CHIP RES.	0	1/16W	5%	RMC1/16S JPTH	J24189070		1-	A	C1
R 7033	CHIP RES.	10k	1/16W	5%	RMC1/16S 103JTH	J24189037		1-	A	A2
R 7034	CHIP RES.	10k	1/16W	5%	RMC1/16S 103JTH	J24189037		1-	A	A2
R 7035	CHIP RES.	10k	1/16W	5%	RMC1/16S 103JTH	J24189037		1-	A	A2
R 7036	CHIP RES.	10k	1/16W	5%	RMC1/16S 103JTH	J24189037		1-	A	A2
R 7037	CHIP RES.	10k	1/16W	5%	RMC1/16S 103JTH	J24189037		1-	A	B2
R 7039	CHIP RES.	10k	1/16W	5%	RMC1/16S 103JTH	J24189037		1-	A	B2
R 7040	CHIP RES.	10k	1/16W	5%	RMC1/16S 103JTH	J24189037		1-	A	A2
R 7042	CHIP RES.	100k	1/16W	5%	RMC1/16S 104JTH	J24189049		1-	A	B2
R 7044	CHIP RES.	0.1	1/4W	5%	RCC16R100JTP	J24249006		1-	A	B1
R 7045	CHIP RES.	100k	1/16W	1%	RMC1/16SK104FTH	J24189529		1-	A	B1
R 7046	CHIP RES.	150k	1/16W	1%	RMC1/16SK154FTH	J24189531		1-	A	B1
R 7047	CHIP RES.	150k	1/16W	1%	RMC1/16SK154FTH	J24189531		1-	A	B1
R 7048	CHIP RES.	22	1/16W	5%	RMC1/16S 220JTH	J24189005		1-	A	B1
R 7049	CHIP RES.	100k	1/16W	5%	RMC1/16S 104JTH	J24189049		1-	A	D2
R 7050	CHIP RES.	5.6k	1/16W	5%	RMC1/16S 562JTH	J24189034		1-	A	A2
R 7051	CHIP RES.	100k	1/16W	5%	RMC1/16S 104JTH	J24189049		1-	A	D1

REF	DESCRIPTION	VALUE	V/W	TOL.	MFR'S DESIG	YAESU P/N	VERS.	LOT	SIDE	LAY ADR
R 7052	CHIP RES.	100k	1/16W	5%	RMC1/16S 104JTH	J24189049		1-	A	D1
R 7053	CHIP RES.	100k	1/16W	5%	RMC1/16S 104JTH	J24189049		1-	A	B1
R 7054	CHIP RES.	100k	1/16W	5%	RMC1/16S 104JTH	J24189049		1-	A	D1
R 7055	CHIP RES.	100k	1/16W	5%	RMC1/16S 104JTH	J24189049		1-	A	D2
R 7056	CHIP RES.	100k	1/16W	5%	RMC1/16S 104JTH	J24189049		1-	A	D2
R 7057	CHIP RES.	100k	1/16W	5%	RMC1/16S 104JTH	J24189049		1-	A	C1
R 7058	CHIP RES.	100k	1/16W	5%	RMC1/16S 104JTH	J24189049		1-	A	C1
R 7059	CHIP RES.	100k	1/16W	5%	RMC1/16S 104JTH	J24189049		1-	A	C1
R 7060	CHIP RES.	100k	1/16W	5%	RMC1/16S 104JTH	J24189049		1-	A	B1
R 7061	CHIP RES.	100k	1/16W	5%	RMC1/16S 104JTH	J24189049		1-	A	B1
R 7062	CHIP RES.	2.7k	1/16W	5%	RMC1/16S 272JTH	J24189030		1-	A	C1
R 7063	CHIP RES.	2.7k	1/16W	5%	RMC1/16S 272JTH	J24189030		1-	A	C1
R 7064	CHIP RES.	33	1/16W	5%	RMC1/16S 330JTH	J24189007		1-	A	B3
R 7065	CHIP RES.	33	1/16W	5%	RMC1/16S 330JTH	J24189007		1-	A	B3
R 7066	CHIP RES.	33	1/16W	5%	RMC1/16S 330JTH	J24189007		1-	A	B2
R 7067	CHIP RES.	33	1/16W	5%	RMC1/16S 330JTH	J24189007		1-	A	B2
R 7068	CHIP RES.	33	1/16W	5%	RMC1/16S 330JTH	J24189007		1-	A	B2
R 7069	CHIP RES.	33	1/16W	5%	RMC1/16S 330JTH	J24189007		1-	A	C2
R 7070	CHIP RES.	33	1/16W	5%	RMC1/16S 330JTH	J24189007		1-	A	B2
R 7071	CHIP RES.	33	1/16W	5%	RMC1/16S 330JTH	J24189007		1-	A	B2
R 7072	CHIP RES.	33	1/16W	5%	RMC1/16S 330JTH	J24189007		1-	A	B2
R 7073	CHIP RES.	33	1/16W	5%	RMC1/16S 330JTH	J24189007		1-	A	B2
R 7074	CHIP RES.	33	1/16W	5%	RMC1/16S 330JTH	J24189007		1-	A	B2
R 7075	CHIP RES.	33	1/16W	5%	RMC1/16S 330JTH	J24189007		1-	A	B3
R 7076	CHIP RES.	33	1/16W	5%	RMC1/16S 330JTH	J24189007		1-	A	B3
R 7077	CHIP RES.	33	1/16W	5%	RMC1/16S 330JTH	J24189007		1-	A	B3
R 7078	CHIP RES.	33	1/16W	5%	RMC1/16S 330JTH	J24189007		1-	A	B3
R 7079	CHIP RES.	33	1/16W	5%	RMC1/16S 330JTH	J24189007		1-	A	B3
R 7080	CHIP RES.	33	1/16W	5%	RMC1/16S 330JTH	J24189007		1-	A	B3
RB7001	BLOCK RES.				RAC104D104JCTH	J42900055		1-	A	A3
RB7002	BLOCK RES.				RAC104D104JCTH	J42900055		1-	A	B3
RB7003	BLOCK RES.				RAC104D104JCTH	J42900055		1-	A	B3
RB7004	BLOCK RES.				RAC104D104JCTH	J42900055		1-	A	B3
RB7005	BLOCK RES.				RAC104D104JCTH	J42900055		1-	A	B3
RB7006	BLOCK RES.				RAC104D104JCTH	J42900055		1-	A	B3
RB7007	BLOCK RES.				RAC104D104JCTH	J42900055		1-	A	B3
RB7008	BLOCK RES.				RAC104D104JCTH	J42900055		1-	A	A2
RB7009	BLOCK RES.				RAC104D104JCTH	J42900055		1-	A	D1
RB7010	BLOCK RES.				MNR14E0ABJ330	J42900036		1-	A	A3
RB7011	BLOCK RES.				MNR14E0ABJ330	J42900036		1-	A	B2
RB7012	BLOCK RES.				MNR14E0ABJ330	J42900036		1-	A	B2
RB7013	BLOCK RES.				MNR14E0ABJ330	J42900036		1-	A	B2
RB7015	BLOCK RES.				MNR14E0ABJ330	J42900036		1-	A	B2
RB7016	BLOCK RES.				MNR14E0ABJ330	J42900036		1-	A	B3
RB7017	BLOCK RES.				MNR14E0ABJ330	J42900036		1-	A	B3
RB7018	BLOCK RES.				MNR14E0ABJ330	J42900036		1-	A	B3
RB7019	BLOCK RES.				MNR14E0ABJ330	J42900036		1-	A	B3
RB7022	BLOCK RES.				MNR14E0ABJ330	J42900036		1-	A	D2
RB7023	BLOCK RES.				MNR14E0ABJ330	J42900036		1-	A	D2
RB7024	BLOCK RES.				MNR14E0ABJ330	J42900036		1-	A	D2
RB7025	BLOCK RES.				MNR14E0ABJ330	J42900036		1-	A	D2
X 7001	XTAL NX3225SA	18.001MHz			18.001MHZ	H0103420		1-	A	B1
	SHIELD CASE				(TFT)	RA1384400		1-		
	SHIELD CASE COVER				(TFT)	RA1384500		1-		
	SPACER				(TFT)	RA1384600		1-		
	GASKET				(8x48)	RA1384700		1-		
	DOUBLE FACE				(TFT)	RA1480300		1-		

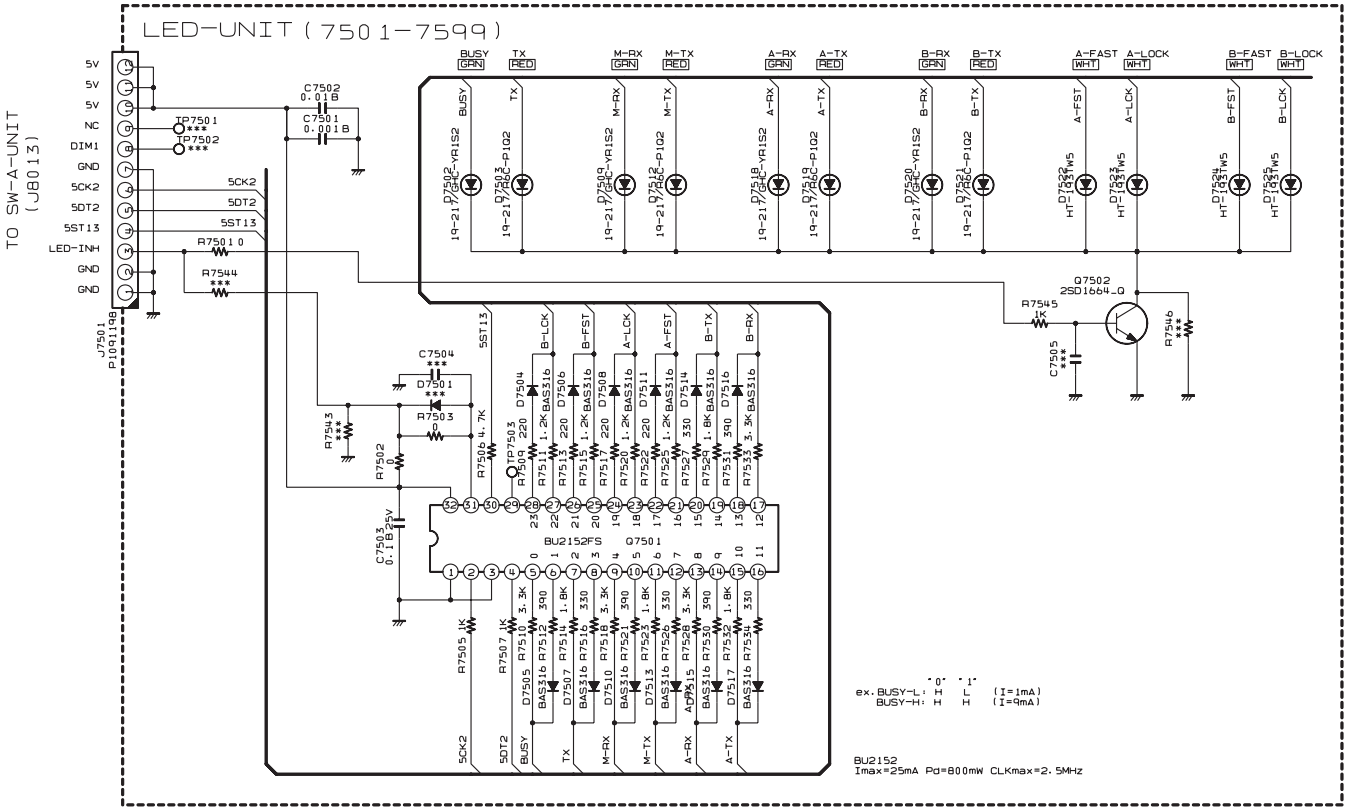

Parts Layout

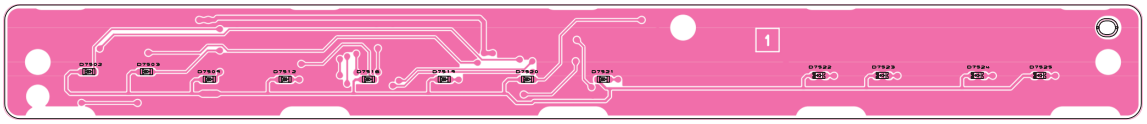

Side A

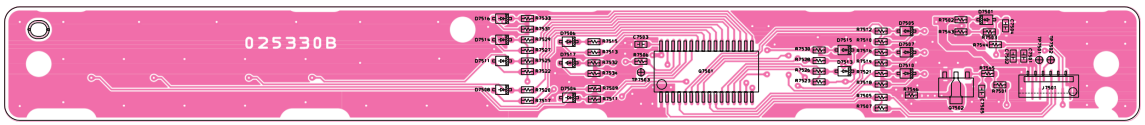

Side B

REF	DESCRIPTION	VALUE	V/W	TOL.	MFR'S DESIG	YAESU P/N	VERS.	LOT	SIDE	LAY ADR
	PCB with Components					CB6376001				
C 7501	CHIP CAP.	0.001uF	50V	B	GRM188B11H102KA01D	K22174821		1-	B	
C 7502	CHIP CAP.	0.01uF	50V	B	GRM188B11H103KA01D	K22174823		1-	B	
C 7503	CHIP CAP.	0.1uF	25V	B	GRM188B11E104KA01D	K22144814		1-	B	
D 7502	LED				19-217/GHC-YR1S2/3T	G2071438		1-	A	
D 7503	LED				19-217/R6C-P1Q2/3T	G2071440		1-	A	
D 7504	DIODE				BAS316	G2070716		1-	B	
D 7505	DIODE				BAS316	G2070716		1-	B	
D 7506	DIODE				BAS316	G2070716		1-	B	
D 7507	DIODE				BAS316	G2070716		1-	B	
D 7508	DIODE				BAS316	G2070716		1-	B	
D 7509	LED				19-217/GHC-YR1S2/3T	G2071438		1-	A	
D 7510	DIODE				BAS316	G2070716		1-	B	
D 7511	DIODE				BAS316	G2070716		1-	B	
D 7512	LED				19-217/R6C-P1Q2/3T	G2071440		1-	A	
D 7513	DIODE				BAS316	G2070716		1-	B	
D 7514	DIODE				BAS316	G2070716		1-	B	
D 7515	DIODE				BAS316	G2070716		1-	B	
D 7516	DIODE				BAS316	G2070716		1-	B	
D 7517	DIODE				BAS316	G2070716		1-	B	
D 7518	LED				19-217/GHC-YR1S2/3T	G2071438		1-	A	
D 7519	LED				19-217/R6C-P1Q2/3T	G2071440		1-	A	
D 7520	LED				19-217/GHC-YR1S2/3T	G2071438		1-	A	
D 7521	LED				19-217/R6C-P1Q2/3T	G2071440		1-	A	
D 7522	LED				HT-193TW5	G2071390		1-	A	
D 7523	LED				HT-193TW5	G2071390		1-	A	
D 7524	LED				HT-193TW5	G2071390		1-	A	
D 7525	LED				HT-193TW5	G2071390		1-	A	
J 7501	CONNECTOR				12FLT-SM2-TB(LF)(SN)	P1091198		1-	B	
Q 7501	IC				BU2152FS(TAPE)	G1093942		1-	B	
Q 7502	TRANSISTOR				2SD1664 T100 Q	G3416647Q		1-	B	
R 7501	CHIP RES.	0	1/16W	5%	RMC1/16 000JATP	J24185000		1-	B	
R 7502	CHIP RES.	0	1/16W	5%	RMC1/16 000JATP	J24185000		1-	B	
R 7503	CHIP RES.	0	1/16W	5%	RMC1/16 000JATP	J24185000		1-	B	
R 7505	CHIP RES.	1k	1/16W	5%	RMC1/16 102JATP	J24185102		1-	B	
R 7506	CHIP RES.	4.7k	1/16W	5%	RMC1/16 472JATP	J24185472		1-	B	
R 7507	CHIP RES.	1k	1/16W	5%	RMC1/16 102JATP	J24185102		1-	B	
R 7509	CHIP RES.	220	1/16W	5%	RMC1/16 221JATP	J24185221		1-	B	
R 7510	CHIP RES.	3.3k	1/16W	5%	RMC1/16 332JATP	J24185332		1-	B	
R 7511	CHIP RES.	1.2k	1/16W	5%	RMC1/16 122JATP	J24185122		1-	B	
R 7512	CHIP RES.	390	1/16W	5%	RMC1/16 391JATP	J24185391		1-	B	
R 7513	CHIP RES.	220	1/16W	5%	RMC1/16 221JATP	J24185221		1-	B	
R 7514	CHIP RES.	1.8k	1/16W	5%	RMC1/16 182JATP	J24185182		1-	B	
R 7515	CHIP RES.	1.2k	1/16W	5%	RMC1/16 122JATP	J24185122		1-	B	
R 7516	CHIP RES.	330	1/16W	5%	RMC1/16 331JATP	J24185331		1-	B	
R 7517	CHIP RES.	220	1/16W	5%	RMC1/16 221JATP	J24185221		1-	B	
R 7518	CHIP RES.	3.3k	1/16W	5%	RMC1/16 332JATP	J24185332		1-	B	
R 7520	CHIP RES.	1.2k	1/16W	5%	RMC1/16 122JATP	J24185122		1-	B	
R 7521	CHIP RES.	390	1/16W	5%	RMC1/16 391JATP	J24185391		1-	B	
R 7522	CHIP RES.	220	1/16W	5%	RMC1/16 221JATP	J24185221		1-	B	
R 7523	CHIP RES.	1.8k	1/16W	5%	RMC1/16 182JATP	J24185182		1-	B	
R 7525	CHIP RES.	1.2k	1/16W	5%	RMC1/16 122JATP	J24185122		1-	B	
R 7526	CHIP RES.	330	1/16W	5%	RMC1/16 331JATP	J24185331		1-	B	
R 7527	CHIP RES.	330	1/16W	5%	RMC1/16 331JATP	J24185331		1-	B	
R 7528	CHIP RES.	3.3k	1/16W	5%	RMC1/16 332JATP	J24185332		1-	B	
R 7529	CHIP RES.	1.8k	1/16W	5%	RMC1/16 182JATP	J24185182		1-	B	
R 7530	CHIP RES.	390	1/16W	5%	RMC1/16 391JATP	J24185391		1-	B	
R 7531	CHIP RES.	390	1/16W	5%	RMC1/16 391JATP	J24185391		1-	B	
R 7532	CHIP RES.	1.8k	1/16W	5%	RMC1/16 182JATP	J24185182		1-	B	
R 7533	CHIP RES.	3.3k	1/16W	5%	RMC1/16 332JATP	J24185332		1-	B	
R 7534	CHIP RES.	330	1/16W	5%	RMC1/16 331JATP	J24185331		1-	B	
R 7545	CHIP RES.	1k	1/16W	5%	RMC1/16 102JATP	J24185102		1-	B	

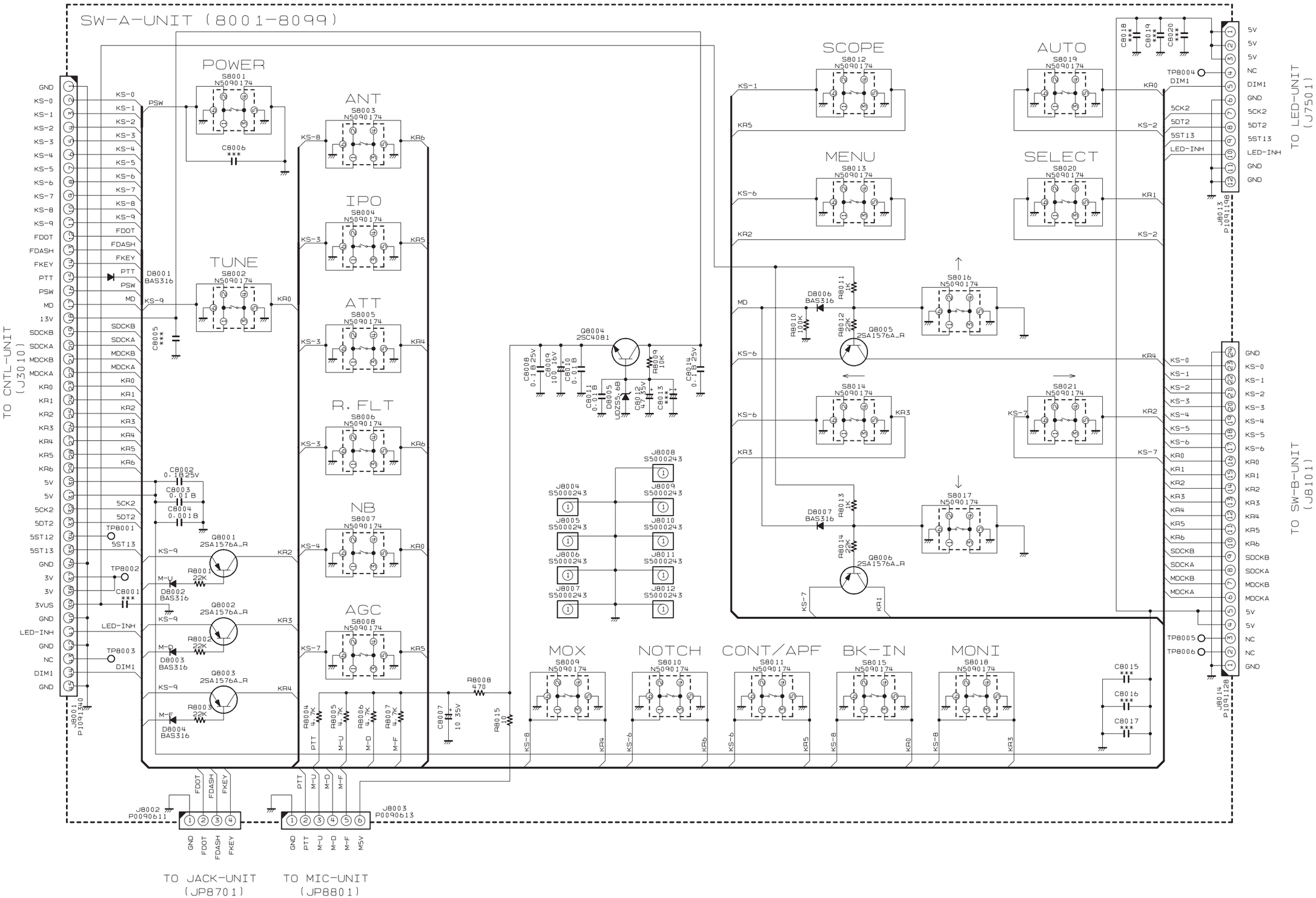
SW-A-UNIT (8001-8099)
TO CNTL-UNIT (J3010)
POWER
S8001 N5090174
C8006 ***
PSW
ANT
S8003 N5090174
IPO
S8004 N5090174
TUNE
S8002 N5090174
D8001 BAS316
C8005 ***
ATT
S8005 N5090174
R. FLT
S8006 N5090174
NB
S8007 N5090174
AGC
S8008 N5090174
C8002 0.1B25V
C8003 0.01B
C8004 0.001B
TP8001
TP8002
C8001 ***
TP8003
Q8001 2SA1576A_R
Q8002 2SA1576A_R
Q8003 2SA1576A_R
R8001 22K
R8002 22K
R8003 22K
D8002 BAS316
D8003 BAS316
D8004 BAS316
J8001 P1091340
J8002 P0090611
J8003 P0090613
TO JACK-UNIT (JP8701)
TO MIC-UNIT (JP8801)
SCOPE
S8012 N5090174
MENU
S8013 N5090174
AUTO
S8019 N5090174
SELECT
S8020 N5090174
S8016 N5090174
S8014 N5090174
S8021 N5090174
S8017 N5090174
D8006 BAS316
D8007 BAS316
R8011 1K
R8012 22K
R8013 1K
R8014 22K
R8010 10K
Q8004 2SC4081
Q8005 2SA1576A_R
Q8006 2SA1576A_R
C8008 0.1B25V
C8009 100/16V
C8010 0.01B
C8011 0.01B
D8005 UDZS5.6B
C8012 47 35V
C8013 ***
R8009 10K
C8014 0.1B25V
J8004 S5000243
J8005 S5000243
J8006 S5000243
J8007 S5000243
J8008 S5000243
J8009 S5000243
J8010 S5000243
J8011 S5000243
J8012 S5000243
R8008 470
C8007 10 35V
R8015 10
R8004 4.7K
R8005 4.7K
R8006 4.7K
R8007 4.7K
MOX
S8009 N5090174
NOTCH
S8010 N5090174
CONT/APF
S8011 N5090174
BK-IN
S8015 N5090174
MONI
S8018 N5090174
C8015 ***
C8016 ***
C8017 ***
C8018 ***
C8019 ***
C8020 ***
TP8004 DIM1
TP8005
TP8006
J8013 P1091198
J8014 P1091128
TO LED-UNIT (J7501)
TO SW-B-UNIT (J8101)
5V
NC
DIM1
GND
5CK2
5DT2
5ST13
LED-INH
KS-0
KS-1
KS-2
KS-3
KS-4
KS-5
KS-6
KS-7
KR0
KR1
KR2
KR3
KR4
KR5
KR6
SDCKB
SDCKA
MDCKB
MDCKA

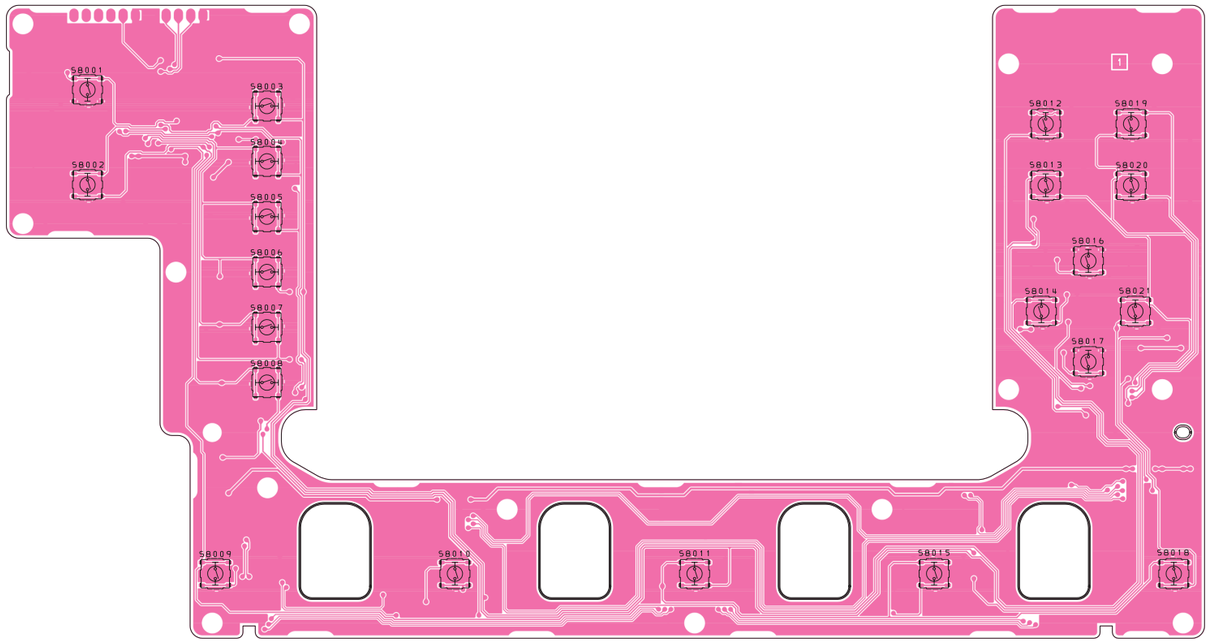
SB001
SB002
SB003
SB004
SB005
SB006
SB007
SB008
SB009
SB010
SB011
SB015
SB018
SB012
SB019
SB013
SB020
SB016
SB014
SB021
SB017

Side A

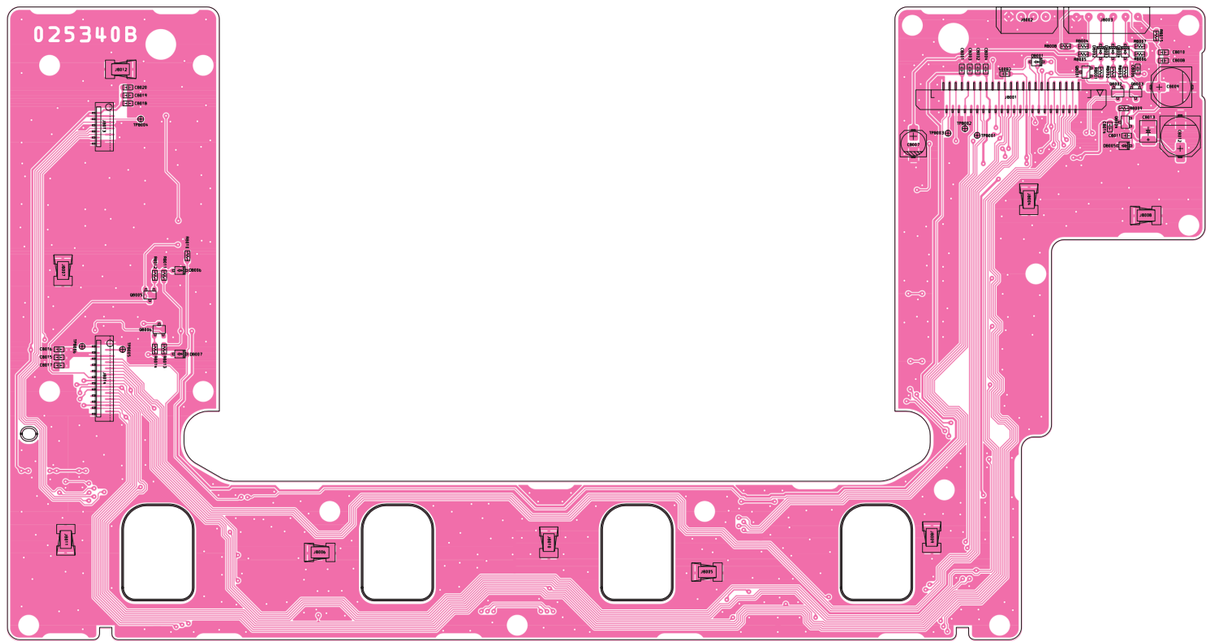
025340B

Side B

REF	DESCRIPTION	VALUE	V/W	TOL.	MFR'S DESIG	YAESU P/N	VERS.	LOT	SIDE	LAY ADR
	PCB with Components					CB6377001				
C 8002	CHIP CAP.	0.1uF	25V	B	GRM188B11E104KA01D	K22144814		1-	B	
C 8003	CHIP CAP.	0.01uF	50V	B	GRM188B11H103KA01D	K22174823		1-	B	
C 8004	CHIP CAP.	0.001uF	50V	B	GRM188B11H102KA01D	K22174821		1-	B	
C 8007	AL.ELECTRO.CAP.	10uF	35V		EEE1VA100WR	K48160006		1-	B	
C 8008	CHIP CAP.	0.1uF	25V	B	GRM188B11E104KA01D	K22144814		1-	B	
C 8009	AL.ELECTRO.CAP.	100uF	16V		EEE1CA101WP	K48120012		1-	B	
C 8010	CHIP CAP.	0.01uF	50V	B	GRM188B11H103KA01D	K22174823		1-	B	
C 8011	CHIP CAP.	0.01uF	50V	B	GRM188B11H103KA01D	K22174823		1-	B	
C 8012	AL.ELECTRO.CAP.	47uF	35V		EEE1VA470WP	K48160005		1-	B	
C 8014	CHIP CAP.	0.1uF	25V	B	GRM188B11E104KA01D	K22144814		1-	B	
D 8001	DIODE				BAS316	G2070716		1-	B	
D 8002	DIODE				BAS316	G2070716		1-	B	
D 8003	DIODE				BAS316	G2070716		1-	B	
D 8004	DIODE				BAS316	G2070716		1-	B	
D 8005	DIODE				UDZS TE-17 5.6B	G2070910		1-	B	
D 8006	DIODE				BAS316	G2070716		1-	B	
D 8007	DIODE				BAS316	G2070716		1-	B	
J 8001	CONNECTOR				IMSA-9639S-45	P1091340		1-	B	
J 8002	CONNECTOR				SB20-04WS	P0090611		1-	B	
J 8003	CONNECTOR				SB20-06WS	P0090613		1-	B	
J 8004	CONTACT				OG-503040	S5000243		1-	B	
J 8005	CONTACT				OG-503040	S5000243		1-	B	
J 8006	CONTACT				OG-503040	S5000243		1-	B	
J 8007	CONTACT				OG-503040	S5000243		1-	B	
J 8008	CONTACT				OG-503040	S5000243		1-	B	
J 8009	CONTACT				OG-503040	S5000243		1-	B	
J 8010	CONTACT				OG-503040	S5000243		1-	B	
J 8011	CONTACT				OG-503040	S5000243		1-	B	
J 8012	CONTACT				OG-503040	S5000243		1-	B	
J 8013	CONNECTOR				12FLT-SM2-TB(LF)(SN)	P1091198		1-	B	
J 8014	CONNECTOR				24FLT-SM2-TB(LF)(SN)(M)	P1091128		1-	B	
Q 8001	TRANSISTOR				2SA1576A T106 R	G3115768R		1-	B	
Q 8002	TRANSISTOR				2SA1576A T106 R	G3115768R		1-	B	
Q 8003	TRANSISTOR				2SA1576A T106 R	G3115768R		1-	B	
Q 8004	TRANSISTOR				2SC4081 T106	G3340818		1-	B	
Q 8005	TRANSISTOR				2SA1576A T106 R	G3115768R		1-	B	
Q 8006	TRANSISTOR				2SA1576A T106 R	G3115768R		1-	B	
R 8001	CHIP RES.	22k	1/16W	5%	RMC1/16 223JATP	J24185223		1-	B	
R 8002	CHIP RES.	22k	1/16W	5%	RMC1/16 223JATP	J24185223		1-	B	
R 8003	CHIP RES.	22k	1/16W	5%	RMC1/16 223JATP	J24185223		1-	B	
R 8004	CHIP RES.	4.7k	1/16W	5%	RMC1/16 472JATP	J24185472		1-	B	
R 8005	CHIP RES.	4.7k	1/16W	5%	RMC1/16 472JATP	J24185472		1-	B	
R 8006	CHIP RES.	4.7k	1/16W	5%	RMC1/16 472JATP	J24185472		1-	B	
R 8007	CHIP RES.	4.7k	1/16W	5%	RMC1/16 472JATP	J24185472		1-	B	
R 8008	CHIP RES.	470	1/16W	5%	RMC1/16 471JATP	J24185471		1-	B	
R 8009	CHIP RES.	10k	1/16W	5%	RMC1/16 103JATP	J24185103		1-	B	
R 8010	CHIP RES.	100k	1/16W	5%	RMC1/16 104JATP	J24185104		1-	B	
R 8011	CHIP RES.	1k	1/16W	5%	RMC1/16 102JATP	J24185102		1-	B	
R 8012	CHIP RES.	22k	1/16W	5%	RMC1/16 223JATP	J24185223		1-	B	
R 8013	CHIP RES.	1k	1/16W	5%	RMC1/16 102JATP	J24185102		1-	B	
R 8014	CHIP RES.	22k	1/16W	5%	RMC1/16 223JATP	J24185223		1-	B	
R 8015	CHIP RES.	10	1/16W	5%	RMC1/16 100JATP	J24185100		1-	B	
S 8001	TACTILE SWITCH				EVQPLHA15	N5090174		1-	A	
S 8002	TACTILE SWITCH				EVQPLHA15	N5090174		1-	A	
S 8003	TACTILE SWITCH				EVQPLHA15	N5090174		1-	A	
S 8004	TACTILE SWITCH				EVQPLHA15	N5090174		1-	A	
S 8005	TACTILE SWITCH				EVQPLHA15	N5090174		1-	A	
S 8006	TACTILE SWITCH				EVQPLHA15	N5090174		1-	A	
S 8007	TACTILE SWITCH				EVQPLHA15	N5090174		1-	A	
S 8008	TACTILE SWITCH				EVQPLHA15	N5090174		1-	A	
S 8009	TACTILE SWITCH				EVQPLHA15	N5090174		1-	A	
S 8010	TACTILE SWITCH				EVQPLHA15	N5090174		1-	A	
S 8011	TACTILE SWITCH				EVQPLHA15	N5090174		1-	A	
S 8012	TACTILE SWITCH				EVQPLHA15	N5090174		1-	A	
S 8013	TACTILE SWITCH				EVQPLHA15	N5090174		1-	A	
S 8014	TACTILE SWITCH				EVQPLHA15	N5090174		1-	A	
S 8015	TACTILE SWITCH				EVQPLHA15	N5090174		1-	A	
S 8016	TACTILE SWITCH				EVQPLHA15	N5090174		1-	A	
S 8017	TACTILE SWITCH				EVQPLHA15	N5090174		1-	A	
S 8018	TACTILE SWITCH				EVQPLHA15	N5090174		1-	A	
S 8019	TACTILE SWITCH				EVQPLHA15	N5090174		1-	A	
S 8020	TACTILE SWITCH				EVQPLHA15	N5090174		1-	A	

REF	DESCRIPTION	VALUE	V/W	TOL.	MFR'S DESIG	YAESU P/N	VERS.	LOT	SIDE	LAY ADR
S 8021	TACTILE SWITCH				EVQPLHA15	N5090174		1-	A	

SW-B-UNIT(8101-8199)

TO SW-A-UNIT (J8014)

J8101 P1091128

GND KS-0 KS-1 KS-2 KS-3 KS-4 KS-5 KS-6 KR0 KR1 KR2 KR3 KR4 KR5 KR6 SDCKB SDCKA MDCKB MDCKA 5V 5V NC NC GND

R8101 0

B 0.001 C8102

B 0.01 C8101

TP8101 TP8102

J8102 S5000243 J8103 S5000243 J8104 S5000243 J8105 S5000243 J8106 S5000243 J8107 S5000243 J8108 S5000243 J8109 S5000243 J8110 S5000243 J8111 S5000243

A>B S8101 N5090174 KS-4 KR4

A<>B S8107 N5090174

SPLIT S8108 N5090174

V/M S8109 N5090174 KS-4 KR6

STO S8102 N5090174 KS-5 KR3

M>A S8110 N5090174 KS-5 KR1

RCL S8103 N5090174 KS-5 KR4

A>M S8111 N5090174 KS-5 KR0

NAR S8104 N5090174 KS-5 KR5

MODE S8112 N5090174 KS-3 KR0

TXW S8105 N5090174 KS-6 KR0

FAST S8113 N5090174 KS-4 KR2

C.S S8106 N5090174 KS-6 KR1

LOCK S8114 N5090174 KS-4 KR3

1.8 S8115 N5090174 KS-0 KR0

3.5 S8121 N5090174 KS-0 KR1

7 S8126 N5090174 KS-0 KR2

10 S8116 N5090174 KS-0 KR3

14 S8122 N5090174 KS-0 KR4

18 S8127 N5090174 KS-0 KR5

21 S8117 N5090174 KS-0 KR6

24.5 S8123 N5090174 KS-1 KR0

28/29 S8128 N5090174 KS-1 KR1

GEN S8118 N5090174 KS-1 KR2

50 S8124 N5090174 KS-1 KR3

ENT S8129 N5090174 KS-1 KR4

RX CLAR S8119 N5090174 KS-2 KR2

TX CLAR S8125 N5090174 KS-2 KR3

CLEAR S8130 N5090174 KS-2 KR4

MHz/uT S8120 N5090174 KS-3 KR2

MCH/GRP S8131 N5090174 KS-3 KR3

VBO-A J8112 P0090623 GND MDCKA MDCKB 5V

VBO-B J8113 P0090611 GND SDCKB SDCKA 5V

MDCKA MDCKB SDCKB SDCKA

RB103 10K RB105 10K RB106 10K RB108 10K RB104 15K RB102 15K RB107 15K RB109 15K

CB104 0.001 B CB106 *** CB103 0.001 B CB105 *** CB107 0.001 B CB108 *** CB109 0.001 B CB110 ***

KS-4 KS-5 KR5 KR6

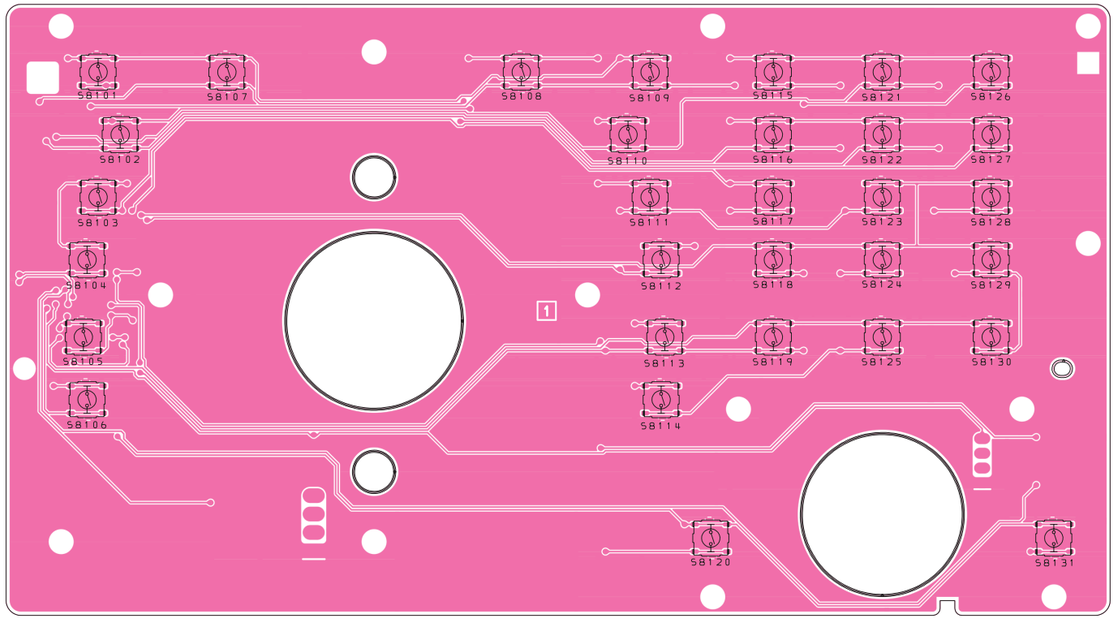
SB101
SB107
SB108
SB109
SB115
SB121
SB126
SB102
SB110
SB116
SB122
SB127
SB103
SB111
SB117
SB123
SB128
SB104
SB112
SB118
SB124
SB129
SB105
SB113
SB119
SB125
SB130
SB106
SB114
SB120
SB131
1

Side A

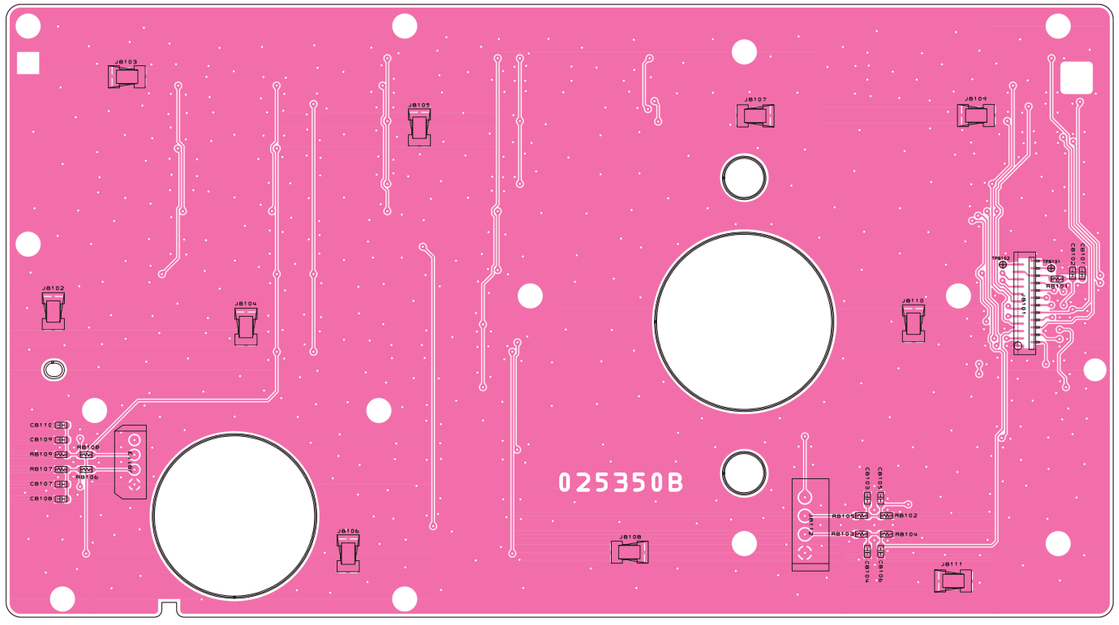
JB103
JB105
JB107
JB109
JB102
JB104
JB110
025350B
JB106
JB108
JB111

Side B

REF	DESCRIPTION	VALUE	V/W	TOL.	MFR'S DESIG	YAESU P/N	VERS.	LOT	SIDE	LAY ADR
	PCB with Components					CB6378001				
C 8101	CHIP CAP.	0.01uF	50V	B	GRM188B11H103KA01D	K22174823		1-	B	
C 8102	CHIP CAP.	0.001uF	50V	B	GRM188B11H102KA01D	K22174821		1-	B	
C 8103	CHIP CAP.	0.001uF	50V	B	GRM188B11H102KA01D	K22174821		1-	B	
C 8104	CHIP CAP.	0.001uF	50V	B	GRM188B11H102KA01D	K22174821		1-	B	
C 8107	CHIP CAP.	0.001uF	50V	B	GRM188B11H102KA01D	K22174821		1-	B	
C 8109	CHIP CAP.	0.001uF	50V	B	GRM188B11H102KA01D	K22174821		1-	B	
J 8101	CONNECTOR				24FLT-SM2-TB(LF)(SN)(M)	P1091128		1-	B	
J 8102	CONTACT				OG-503040	S5000243		1-	B	
J 8103	CONTACT				OG-503040	S5000243		1-	B	
J 8104	CONTACT				OG-503040	S5000243		1-	B	
J 8105	CONTACT				OG-503040	S5000243		1-	B	
J 8106	CONTACT				OG-503040	S5000243		1-	B	
J 8107	CONTACT				OG-503040	S5000243		1-	B	
J 8108	CONTACT				OG-503040	S5000243		1-	B	
J 8109	CONTACT				OG-503040	S5000243		1-	B	
J 8110	CONTACT				OG-503040	S5000243		1-	B	
J 8111	CONTACT				OG-503040	S5000243		1-	B	
J 8112	CONNECTOR				SC25-04WS	P0090623		1-	B	
J 8113	CONNECTOR				SB20-04WS	P0090611		1-	B	
R 8101	CHIP RES.	0	1/16W	5%	RMC1/16 000JATP	J24185000		1-	B	
R 8102	CHIP RES.	15k	1/16W	5%	RMC1/16 153JATP	J24185153		1-	B	
R 8103	CHIP RES.	10k	1/16W	5%	RMC1/16 103JATP	J24185103		1-	B	
R 8104	CHIP RES.	15k	1/16W	5%	RMC1/16 153JATP	J24185153		1-	B	
R 8105	CHIP RES.	10k	1/16W	5%	RMC1/16 103JATP	J24185103		1-	B	
R 8106	CHIP RES.	10k	1/16W	5%	RMC1/16 103JATP	J24185103		1-	B	
R 8107	CHIP RES.	15k	1/16W	5%	RMC1/16 153JATP	J24185153		1-	B	
R 8108	CHIP RES.	10k	1/16W	5%	RMC1/16 103JATP	J24185103		1-	B	
R 8109	CHIP RES.	15k	1/16W	5%	RMC1/16 153JATP	J24185153		1-	B	
S 8101	TACTILE SWITCH				EVQPLHA15	N5090174		1-	A	
S 8102	TACTILE SWITCH				EVQPLHA15	N5090174		1-	A	
S 8103	TACTILE SWITCH				EVQPLHA15	N5090174		1-	A	
S 8104	TACTILE SWITCH				EVQPLHA15	N5090174		1-	A	
S 8105	TACTILE SWITCH				EVQPLHA15	N5090174		1-	A	
S 8106	TACTILE SWITCH				EVQPLHA15	N5090174		1-	A	
S 8107	TACTILE SWITCH				EVQPLHA15	N5090174		1-	A	
S 8108	TACTILE SWITCH				EVQPLHA15	N5090174		1-	A	
S 8109	TACTILE SWITCH				EVQPLHA15	N5090174		1-	A	
S 8110	TACTILE SWITCH				EVQPLHA15	N5090174		1-	A	
S 8111	TACTILE SWITCH				EVQPLHA15	N5090174		1-	A	
S 8112	TACTILE SWITCH				EVQPLHA15	N5090174		1-	A	
S 8113	TACTILE SWITCH				EVQPLHA15	N5090174		1-	A	
S 8114	TACTILE SWITCH				EVQPLHA15	N5090174		1-	A	
S 8115	TACTILE SWITCH				EVQPLHA15	N5090174		1-	A	
S 8116	TACTILE SWITCH				EVQPLHA15	N5090174		1-	A	
S 8117	TACTILE SWITCH				EVQPLHA15	N5090174		1-	A	
S 8118	TACTILE SWITCH				EVQPLHA15	N5090174		1-	A	
S 8119	TACTILE SWITCH				EVQPLHA15	N5090174		1-	A	
S 8120	TACTILE SWITCH				EVQPLHA15	N5090174		1-	A	
S 8121	TACTILE SWITCH				EVQPLHA15	N5090174		1-	A	
S 8122	TACTILE SWITCH				EVQPLHA15	N5090174		1-	A	
S 8123	TACTILE SWITCH				EVQPLHA15	N5090174		1-	A	
S 8124	TACTILE SWITCH				EVQPLHA15	N5090174		1-	A	
S 8125	TACTILE SWITCH				EVQPLHA15	N5090174		1-	A	
S 8126	TACTILE SWITCH				EVQPLHA15	N5090174		1-	A	
S 8127	TACTILE SWITCH				EVQPLHA15	N5090174		1-	A	
S 8128	TACTILE SWITCH				EVQPLHA15	N5090174		1-	A	
S 8129	TACTILE SWITCH				EVQPLHA15	N5090174		1-	A	
S 8130	TACTILE SWITCH				EVQPLHA15	N5090174		1-	A	
S 8131	TACTILE SWITCH				EVQPLHA15	N5090174		1-	A	

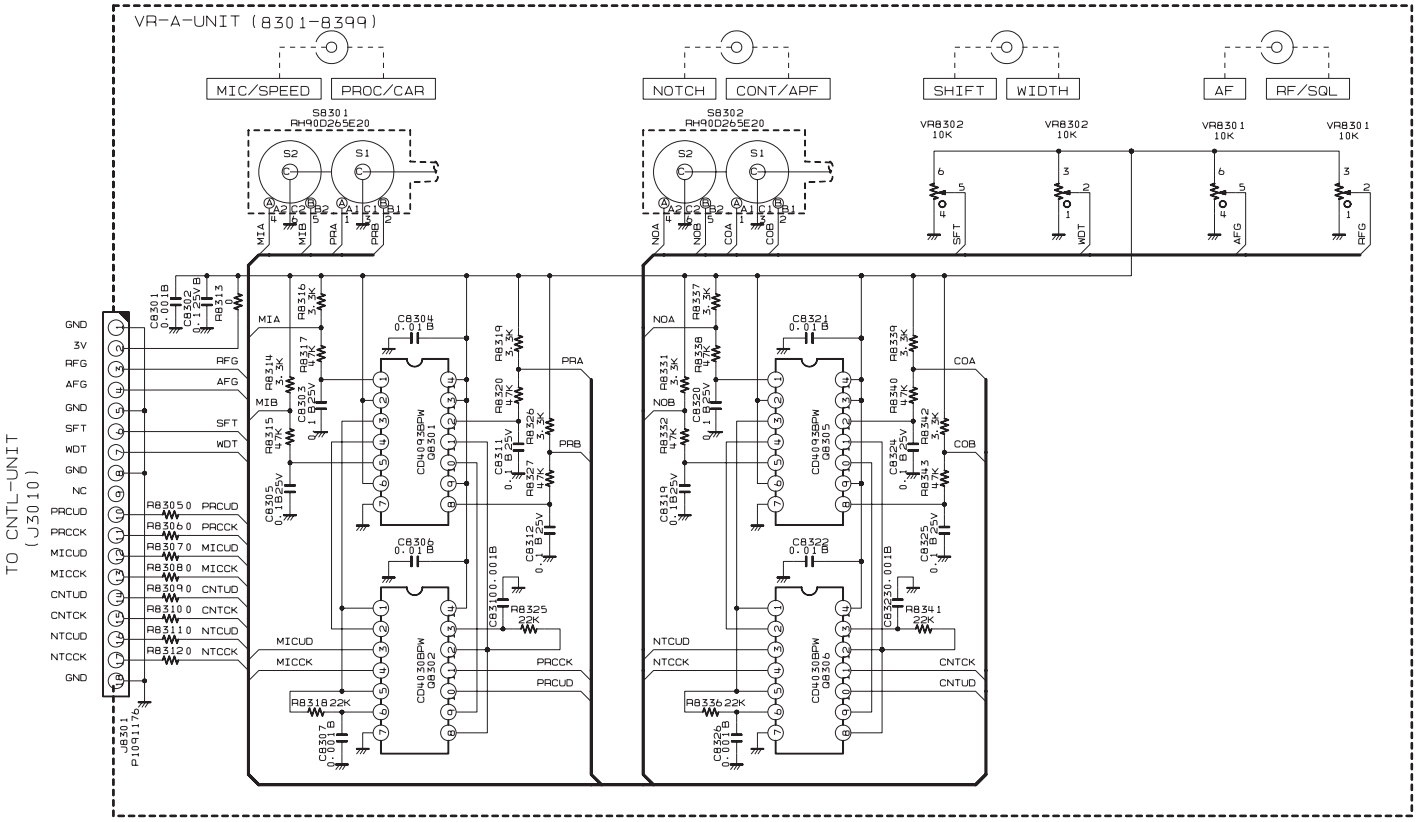

Parts Layout

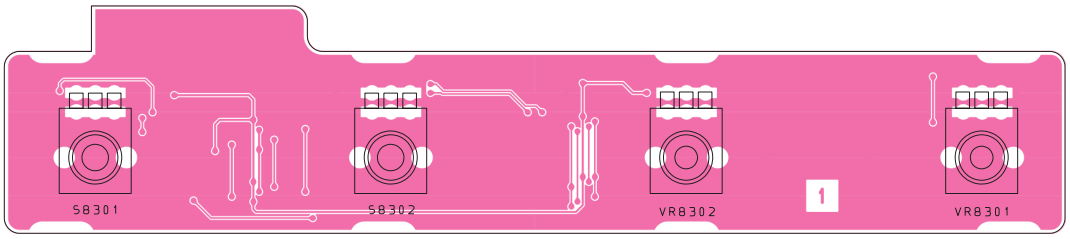

Side A

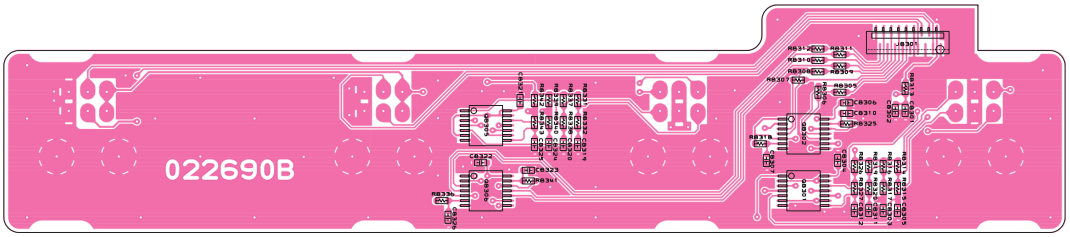

Side B

REF	DESCRIPTION	VALUE	V/W	TOL.	MFR'S DESIG	YAESU P/N	VERS.	LOT	SIDE	LAY ADR
	PCB with Components					CB6379001				
C 8301	CHIP CAP.	0.001uF	50V	B	GRM188B11H102KA01D	K22174821		1-	B	
C 8302	CHIP CAP.	0.1uF	25V	B	GRM188B11E104KA01D	K22144814		1-	B	
C 8303	CHIP CAP.	0.1uF	25V	B	GRM188B11E104KA01D	K22144814		1-	B	
C 8304	CHIP CAP.	0.01uF	50V	B	GRM188B11H103KA01D	K22174823		1-	B	
C 8305	CHIP CAP.	0.1uF	25V	B	GRM188B11E104KA01D	K22144814		1-	B	
C 8306	CHIP CAP.	0.01uF	50V	B	GRM188B11H103KA01D	K22174823		1-	B	
C 8307	CHIP CAP.	0.001uF	50V	B	GRM188B11H102KA01D	K22174821		1-	B	
C 8310	CHIP CAP.	0.001uF	50V	B	GRM188B11H102KA01D	K22174821		1-	B	
C 8311	CHIP CAP.	0.1uF	25V	B	GRM188B11E104KA01D	K22144814		1-	B	
C 8312	CHIP CAP.	0.1uF	25V	B	GRM188B11E104KA01D	K22144814		1-	B	
C 8319	CHIP CAP.	0.1uF	25V	B	GRM188B11E104KA01D	K22144814		1-	B	
C 8320	CHIP CAP.	0.1uF	25V	B	GRM188B11E104KA01D	K22144814		1-	B	
C 8321	CHIP CAP.	0.01uF	50V	B	GRM188B11H103KA01D	K22174823		1-	B	
C 8322	CHIP CAP.	0.01uF	50V	B	GRM188B11H103KA01D	K22174823		1-	B	
C 8323	CHIP CAP.	0.001uF	50V	B	GRM188B11H102KA01D	K22174821		1-	B	
C 8324	CHIP CAP.	0.1uF	25V	B	GRM188B11E104KA01D	K22144814		1-	B	
C 8325	CHIP CAP.	0.1uF	25V	B	GRM188B11E104KA01D	K22144814		1-	B	
C 8326	CHIP CAP.	0.001uF	50V	B	GRM188B11H102KA01D	K22174821		1-	B	
J 8301	CONNECTOR				18FLT-SM2-TB(LF)(SN)(M)	P1091176		1-	B	
Q 8301	IC				CD4093BPWR	G1094093		1-	B	
Q 8302	IC				CD4030BPWR	G1094092		1-	B	
Q 8305	IC				CD4093BPWR	G1094093		1-	B	
Q 8306	IC				CD4030BPWR	G1094092		1-	B	
R 8305	CHIP RES.	0	1/16W	5%	RMC1/16 000JATP	J24185000		1-	B	
R 8306	CHIP RES.	0	1/16W	5%	RMC1/16 000JATP	J24185000		1-	B	
R 8307	CHIP RES.	0	1/16W	5%	RMC1/16 000JATP	J24185000		1-	B	
R 8308	CHIP RES.	0	1/16W	5%	RMC1/16 000JATP	J24185000		1-	B	
R 8309	CHIP RES.	0	1/16W	5%	RMC1/16 000JATP	J24185000		1-	B	
R 8310	CHIP RES.	0	1/16W	5%	RMC1/16 000JATP	J24185000		1-	B	
R 8311	CHIP RES.	0	1/16W	5%	RMC1/16 000JATP	J24185000		1-	B	
R 8312	CHIP RES.	0	1/16W	5%	RMC1/16 000JATP	J24185000		1-	B	
R 8313	CHIP RES.	0	1/16W	5%	RMC1/16 000JATP	J24185000		1-	B	
R 8314	CHIP RES.	3.3k	1/16W	5%	RMC1/16 332JATP	J24185332		1-	B	
R 8315	CHIP RES.	47k	1/16W	5%	RMC1/16 473JATP	J24185473		1-	B	
R 8316	CHIP RES.	3.3k	1/16W	5%	RMC1/16 332JATP	J24185332		1-	B	
R 8317	CHIP RES.	47k	1/16W	5%	RMC1/16 473JATP	J24185473		1-	B	
R 8318	CHIP RES.	22k	1/16W	5%	RMC1/16 223JATP	J24185223		1-	B	
R 8319	CHIP RES.	3.3k	1/16W	5%	RMC1/16 332JATP	J24185332		1-	B	
R 8320	CHIP RES.	47k	1/16W	5%	RMC1/16 473JATP	J24185473		1-	B	
R 8325	CHIP RES.	22k	1/16W	5%	RMC1/16 223JATP	J24185223		1-	B	
R 8326	CHIP RES.	3.3k	1/16W	5%	RMC1/16 332JATP	J24185332		1-	B	
R 8327	CHIP RES.	47k	1/16W	5%	RMC1/16 473JATP	J24185473		1-	B	
R 8331	CHIP RES.	3.3k	1/16W	5%	RMC1/16 332JATP	J24185332		1-	B	
R 8332	CHIP RES.	47k	1/16W	5%	RMC1/16 473JATP	J24185473		1-	B	
R 8336	CHIP RES.	22k	1/16W	5%	RMC1/16 223JATP	J24185223		1-	B	
R 8337	CHIP RES.	3.3k	1/16W	5%	RMC1/16 332JATP	J24185332		1-	B	
R 8338	CHIP RES.	47k	1/16W	5%	RMC1/16 473JATP	J24185473		1-	B	
R 8339	CHIP RES.	3.3k	1/16W	5%	RMC1/16 332JATP	J24185332		1-	B	
R 8340	CHIP RES.	47k	1/16W	5%	RMC1/16 473JATP	J24185473		1-	B	
R 8341	CHIP RES.	22k	1/16W	5%	RMC1/16 223JATP	J24185223		1-	B	
R 8342	CHIP RES.	3.3k	1/16W	5%	RMC1/16 332JATP	J24185332		1-	B	
R 8343	CHIP RES.	47k	1/16W	5%	RMC1/16 473JATP	J24185473		1-	B	
S 8301	ROTARY ENCODER				RH90D265E20 RY-10164	Q9000950		1-	A	
S 8302	ROTARY ENCODER				RH90D265E20 RY-10164	Q9000950		1-	A	
VR8301	POT.	10k			RH96D1141 25F B103X2	J62800152		1-	A	
VR8302	POT.	10k			RH96D1142 25F B103X2	J62800151		1-	A	
	LEAF SPRING					R0140031		4-		

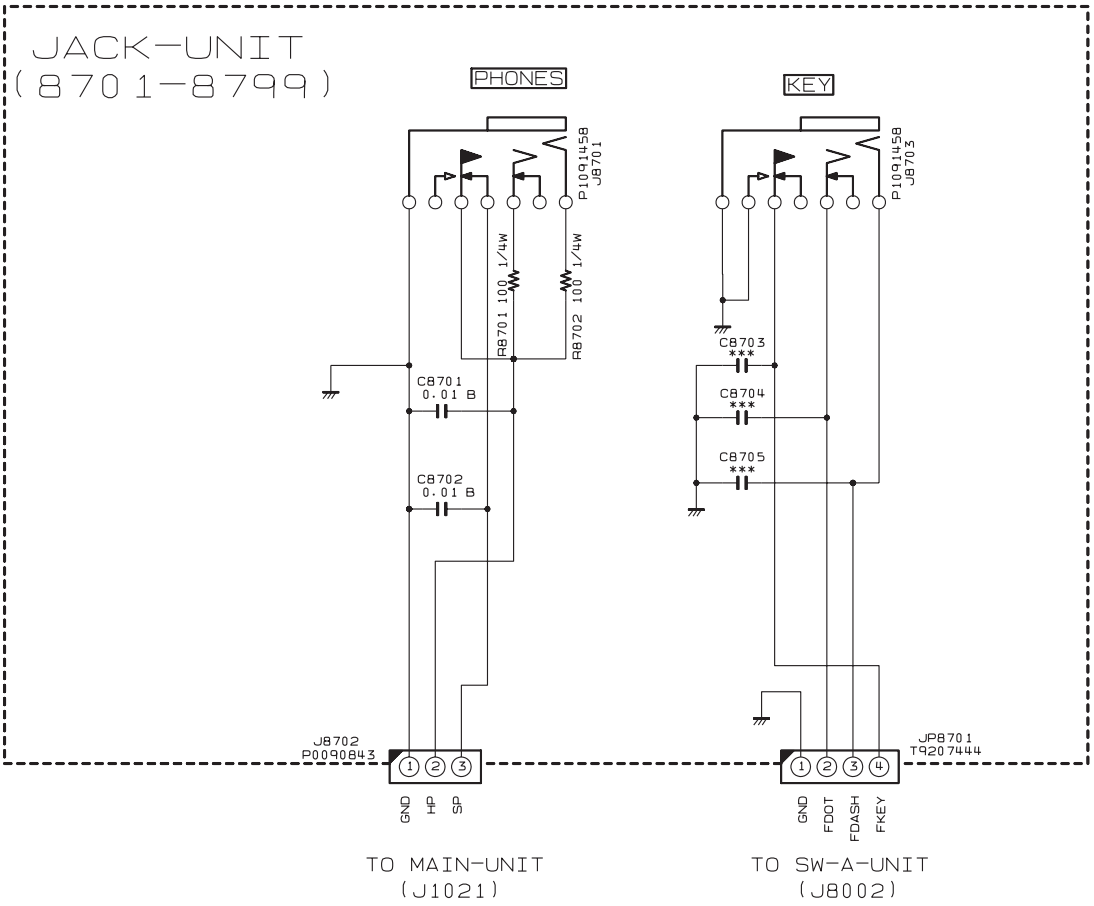

Parts Layout

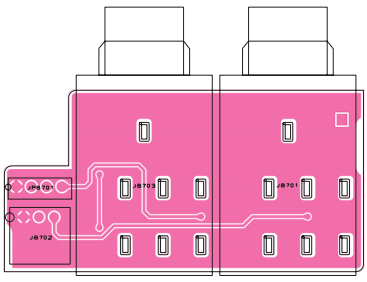

Side A

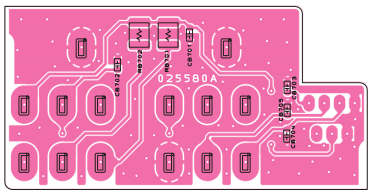

Side B

Parts List

REF	DESCRIPTION	VALUE	V/W	TOL.	MFR'S DESIG	YAESU P/N	VERS.	LOT	SIDE	LAY ADR
	PCB with Components					CB6380001				
C 8701	CHIP CAP.	0.01uF	50V	B	GRM188B11H103KA01D	K22174823		1-	B	
C 8702	CHIP CAP.	0.01uF	50V	B	GRM188B11H103KA01D	K22174823		1-	B	
J 8701	CONNECTOR				HTJ-064-05G	P1091458		1-	A	
J 8702	CONNECTOR				SB20-03WL	P0090843		1-	A	
J 8703	CONNECTOR				HTJ-064-05G	P1091458		1-	A	
JP8701	WIRE ASSY				AH031H 60MM4P	T9207444		1-	A	
R 8701	CHIP RES.	100	1/4W	5%	RMC1/4 101JATP	J24245101		1-	B	
R 8702	CHIP RES.	100	1/4W	5%	RMC1/4 101JATP	J24245101		1-	B	
	FITTING				MET41-0191	S5000329		1-		
	GROUND PLATE				(JACK)	RA1173300		1-		

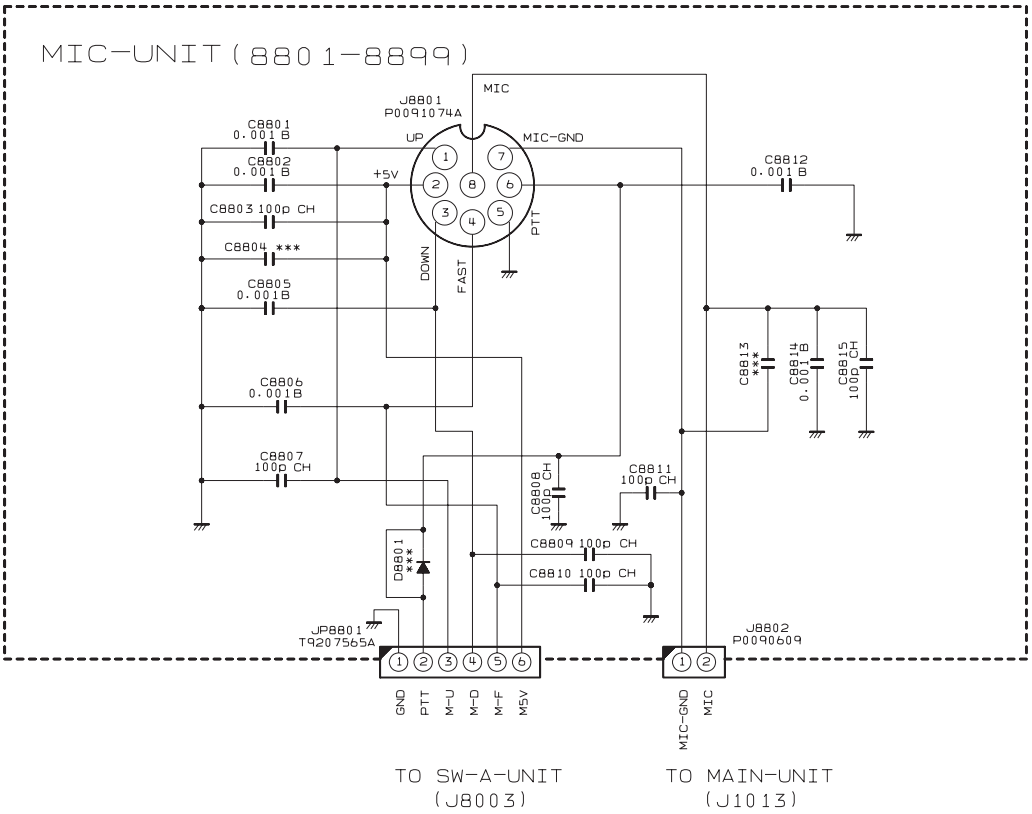

Parts Layout

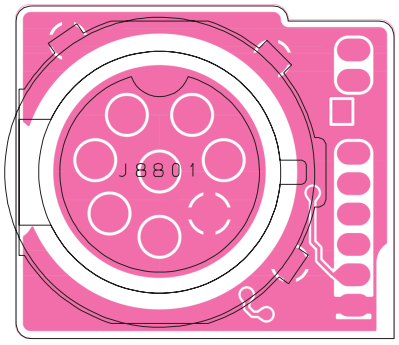

Side A

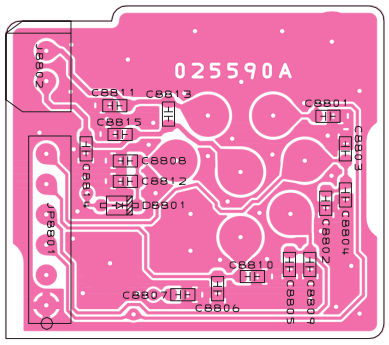

Side B

Parts List

REF	DESCRIPTION	VALUE	V/W	TOL.	MFR'S DESIG	YAESU P/N	VERS.	LOT	SIDE	LAY ADR
	PCB with Components					CB6381001				
C 8801	CHIP CAP.	0.001uF	50V	B	GRM188B11H102KA01D	K22174821		1-	B	
C 8802	CHIP CAP.	0.001uF	50V	B	GRM188B11H102KA01D	K22174821		1-	B	
C 8803	CHIP CAP.	100pF	50V	CH	GRM1882C1H101JA01D	K22174235		1-	B	
C 8805	CHIP CAP.	0.001uF	50V	B	GRM188B11H102KA01D	K22174821		1-	B	
C 8806	CHIP CAP.	0.001uF	50V	B	GRM188B11H102KA01D	K22174821		1-	B	
C 8807	CHIP CAP.	100pF	50V	CH	GRM1882C1H101JA01D	K22174235		1-	B	
C 8808	CHIP CAP.	100pF	50V	CH	GRM1882C1H101JA01D	K22174235		1-	B	
C 8809	CHIP CAP.	100pF	50V	CH	GRM1882C1H101JA01D	K22174235		1-	B	
C 8810	CHIP CAP.	100pF	50V	CH	GRM1882C1H101JA01D	K22174235		1-	B	
C 8811	CHIP CAP.	100pF	50V	CH	GRM1882C1H101JA01D	K22174235		1-	B	
C 8812	CHIP CAP.	0.001uF	50V	B	GRM188B11H102KA01D	K22174821		1-	B	
C 8814	CHIP CAP.	0.001uF	50V	B	GRM188B11H102KA01D	K22174821		1-	B	
C 8815	CHIP CAP.	100pF	50V	CH	GRM1882C1H101JA01D	K22174235		1-	B	
J 8801	CONNECTOR				FM214-8SMPT-NI	P0091074A		1-	A	
J 8802	CONNECTOR				SB20-02WS	P0090609		1-	B	
JP8801	WIRE ASSY				AH046H 130MM6P	T9207565A		1-	B	
	GROUND PLATE				(MIC)	RA1173200		1-		

YAESU

The radio

Copyright 2015
YAESU MUSEN CO., LTD.
All rights reserved

No portion of this manual
may be reproduced without
the permission of
YAESU MUSEN CO., LTD.