VHF FM TRANSCEIVER

TK-780

SERVICE MANUAL

REVISED E·E3 versions

KENWOOD

B51-8523-10 (N) 388

This Service Manual was revised based on the service manual as per parts No. B51-8523-00, in order to include new variants with the following destination codes : E3.

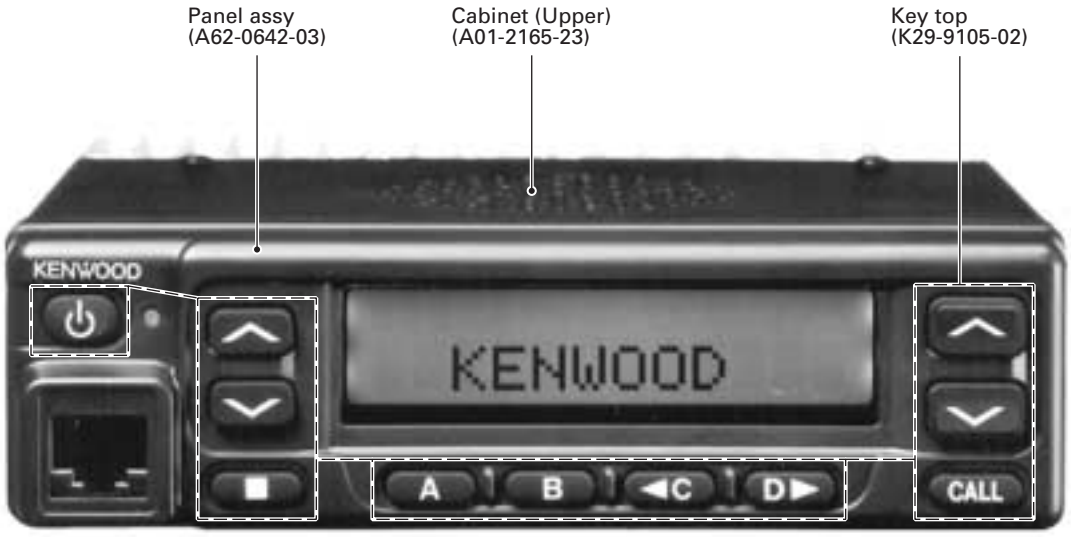

CONTENTS

GENERAL

INTRODUCTION

SCOPE OF THIS MANUAL

This manual is intended for use by experienced technicians familiar with similar types of commercial grade communications equipment. It contains all required service information for the equipment and is current as of the publication data. Changes which may occur after publication are covered by either Service Bulletins or Manual Revisions. These are issued as required.

ORDERING REPLACEMENT PARTS

When ordering replacement parts or equipment information, the full part identification number should be included. This applies to all parts : components, kits, or chassis. If the part number is not known, include the chassis or kit number of which it is a part, and a sufficient description of the required component for proper identification.

PERSONNEL SAFETY

The following precautions are recommended for personnel safety :

- DO NOT transmit if someone is within two feet (0.6 meter) of the antenna.
- DO NOT transmit until all RF connectors are verified secure and any open connectors are properly terminated.
- SHUT OFF and DO NOT operate this equipment near electrical blasting caps or in an explosive atmosphere.
- All equipment should be properly grounded before power-up for safe operation.
- This equipment should be serviced by a qualified technician only.

NOTE

The terms, “Wide” and “Semi wide” this service manual, are same as “Wide 5k” and “Wide 4k” in the KPG-60D (Field Programming Unit) menu and help text, respectively.

PRE-INSTALLATION CONSIDERNATIONS

1. UNPACKING

Unpack the radio from its shipping container and check for accessory items. If any item is missing, please contact KENWOOD immediately.

2. PRE-INSTALLATION CHECKOUT

2-1. Introduction

Each radio is adjusted and tested before shipment. However, it is recommended that receiver and transmitter operation be checked for proper operation before installation.

2-2. Testing

The radio should be tested complete with all cabling and accessories as they will be connected in the final installation. Transmitter frequency, deviation, and power output should be checked, as should receiver sensitivity, squelch operation, and audio output. QT equipment operation should be verified.

3. PLANNING THE INSTALLATION

3-1. General

Inspect the vehicle and determine how and where the radio antenna and accessories will be mounted.

Plan cable runs for protection against pinching or crushing wiring, and radio installation to prevent overheating.

3-2. Antenna

The favored location for an antenna is in the center of a large, flat conductive area, usually at the roof center. The trunk lid is preferred, bond the trunk lid and vehicle chassis using ground straps to ensure the lid is at chassis ground.

3-3. Radio

The universal mount bracket allows the radio to be mounted in a variety of ways. Be sure the mounting surface is adequate to support the radio’s weight. Allow sufficient space around the radio for air cooling. Position the radio close enough to the vehicle operator to permit easy access to the controls when driving.

3-4. DC Power and wiring

1. This radio may be installed in negative ground electrical systems only. Reverse polarity will cause the cable fuse to blow. Check the vehicle ground polarity before installation to prevent wasted time and effort.
2. Connect the positive power lead directly to the vehicle battery positive terminal. Connecting the Positive lead to any other positive voltage source in the vehicle is not recommended.

CAUTION

If DC power is to be controlled by the vehicle ignition switch, a switching relay should be used to switch the positive power lead. The vehicle ignition switch then controls DC to the relay coil.

3. Connect the ground lead directly to the battery negative terminal.
4. The cable provided with the radio is sufficient to handle the maximum radio current demand. If the cable must be extended, be sure the additional wire is sufficient for the current to be carried and length of the added lead.

GENERAL / OPERATING FEATURES

4. INSTALLATION PLANNING – CONTROL STATIONS

4-1. Antenna system

Control station. The antenna system selection depends on many factors and is beyond the scope of this manual. Your KENWOOD dealer can help you select an antenna system that will best serve your particular needs.

4-2. Radio location

Select a convenient location for your control station radio which is as close as practical to the antenna cable entry point. Secondly, use your system's power supply (which supplies the voltage and current required for your system). Make sure sufficient air can flow around the radio and power supply to allow adequate cooling.

SERVICE

This radio is designed for easy servicing. Refer to the schematic diagrams, printed circuit board views, and alignment procedures contained in this manual.

Note

When you modify your radio as described in system setup, take the following precaution.

The rating of pin 7 (SB) of the accessory connector cable (KCT-19) on the rear of the radio is 13.2V (0.75A). Insert a 1A fuse if you use the SB pin for external equipment.

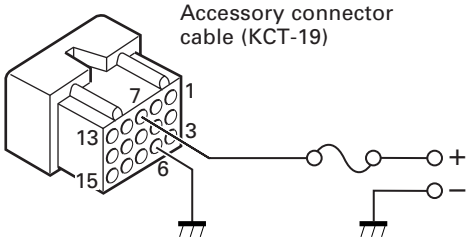

If you do not intend to use the 3.5-mm jack for the external speaker, fit the supplied speaker-jack cap (B09-0235-05) to stop dust and sand getting in.

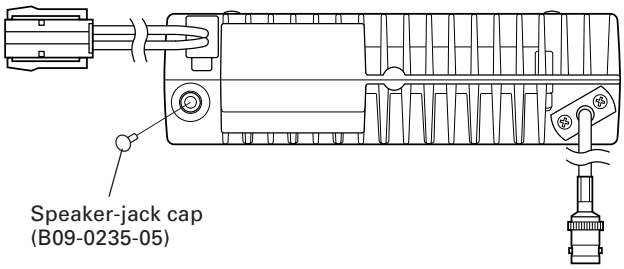

1. Operation Features

The TK-780 is a VHF FM radio designed in both 5-tone model and DTMF/2-tone/DMS model. The programmable features are summarized.

This transceiver can handle up to 250 groups with 250 channels in each group.

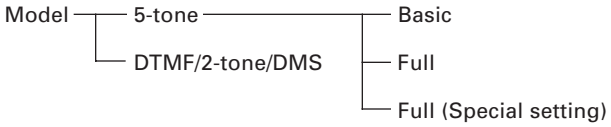

1-1. 5-tone Model

In this model, you can program Basic or Full level features. When you select Basic level, only 1 frame 5-tone can be programmed, and various functions are limited.

When you select "Special setting" in the Full level, you can use encode/decode format. Using encode/decode format, you can further program the transceiver to run the script.

1-2. DTMF/2-tone/DMS Model

You can use option signalling which is DTMF or 2-tone (only for decode) or DMS (Digital Message System-FFSK signalling) for every channel.

2. Transceiver Controls and Indicators (Fig. 1)

2-1. Front Panel Controls

All the keys on the front panel are momentary-type push buttons. The functions of these keys are explained below.

- **POWER key**

Transceiver POWER key. When the power is switched off, all the parameters, such as the group and channel, are stored in memory. When the power is switched on again, the transceiver returns to the previous conditions.

- **CHANNEL UP/DOWN key**
- **CALL key (Programmable)**
- **■ key (Programmable)**
- **A, B, C and D key (Programmable)**
- **VOLUME UP/DOWN key (Programmable)**
- **BUSY/TX LED**

The BUSY indicator (Green LED) shows that the channel is in use. The TX indicator (Red LED) shows that you are transmitting.

OPERATING FEATURES

2-2. Programmable Keys

The FPU (KPG-60D) enables programmable keys to select the following functions.

■ Auto Dial

To transmit the stored DTMF code automatically. When you select DTMF encode in the "Auto dial mode" menu, Auto dial, Redial, Dial ID and Store & Send modes are available.

Press the [Auto dial] key to enter the "Auto dial mode". Select the desired number to send. It is use the [Channel up] and [Channel down] keys, or the [2] and [8] keys on the microphone to select. Press the [✱] key to transmit the numbers.

■ Auto Dial Programming

You can store the DTMF code and name, or erase it at the transceiver.

• To store a DTMF code

Press the [Auto dial programming] key to enter "Auto dial programming mode". Select the desired memory number you wish to store.

Press the [✱] key to select the desired memory number (Enter auto dial memory name).

Press the [✱] key to store the memory name. Now, enter the DTMF codes you want to store.

Press the [✱] key to store the numbers. A beep sound confirms that the numbers are stored in the memory.

• To erase the stored DTMF code

Press the [Auto dial programming] key to enter "Auto dial programming mode".

Press the [#] key to enter "Auto dial clear mode". Select the memory number you want to erase.

Press the [✱] key to erase the stored numbers and exit "Auto dial clear mode".

■ AUX A

If this key is pressed, "AUX" icon lights on the LCD and Horn alert port which is inside of the transceiver turns to the high level. If pressed again, the "AUX" icon goes off and the Horn alert ports turns to the lower level.

■ AUX B

This function can be programmed when the voice scrambler board is not installed.

If this key is pressed, an underscore ("_") appears at the extreme right of the LCD and OPT port which is inside of the transceiver turns to the active level (low). If pressed again, the underscore disappears and the OPT ports turns to the deactive level (high).

■ Channel Name

Press this key to switch between the "Channel name" and "Grp #/Ch #" for the display. If no channel name is programmed, the transceiver automatically displays the group #/channel #.

■ Channel Up/Down

When this key is pressed each time, the channel number to be selected is increased/decreased and repeats if held for one second or longer.

■ Call 1 to 6 (5-tone)

Press the [CALL #] key to transmit the 5-tone code that is programmed to "Call #" in the system parameters.

■ Channel Entry

You can directly recall the channel using the numeric keypad without using the [Channel up], [Channel down].

To access the channel directly, enter 1 to 3 digit numbers, depending on the number of the programmed channels.

For example, if the radio has 199 programmed channels (the maximum channel number is a 3-digit number) and you would like to recall channel 5, you must enter [0],[0],[5]. If the radio has 99 channels (2-digit number), you must enter [0],[5] to access channel 5.

■ Emergency Call

Pressing this key causes the transceiver to enter the emergency mode. The transceiver jumps to the programmed "Emergency group/channel" and transmits for programmed "Duration of transmission time".

The transceiver disables microphone mute while transmitting. After finishing transmission, the transceiver receivers for programmed "Duration of receiving". The transceiver mutes the speaker while receiving. Following the above sequence, the transceiver continues to transmit and receive.

You can select whether or not the emergency ID is transmitted in the emergency mode.

■ Fixed Volume

This function is used for changing the volume level, it is power on tone, control tone, warning tone, alert tone, AF volume type.

If these tone is set up in "Fixed", the tone level can be changed when [Fixed volume] key is pressed. When [Fixed volume] key is pressed, tone level changes in turn to low (tone volume low), high (tone volume high) and off.

OPERATING FEATURES

■ Group Up/Down

When this key is pressed each time, the group number to be selected is increased/decreased and repeats if held for one second or longer.

■ Home Channel

Press this key once, the channel switches to the preprogrammed home channel.

■ Horn Alert

If you are called from the base station using 5-tone/2-tone/DTMF/DMS while you are away from your transceiver, you will be alerted by the vehicle horn or some other type of external alert. To turn the horn alert function on, press this key. A confirmation tone sounds. If this key pressed again, the horn alert function is turned off.

■ Key Lock

Key lock prevents accidental operation of the transceiver. When key lock is activated, all keys other that PTT, Emergency, Monitor, Monitor momentary, Shift, Squelch, Squelch momentary and Volume up/down, are locked.

"LOCKED" appears momentarily when the [Key lock] key is pressed.

■ Monitor

- **DTMF/2-tone/DMS**

When this key pressed once, "MON" icon lights and squelch unmutes if a carrier is present, regardless of the specified signalling (including option signalling).

If press again, "MON" icon goes off and squelch mutes.

- **5-tone**

Depend on monitor function and monitor key action in the system parameters.

You can select either QT/DQT or 5-tone decoding to be canceled when [Monitor] key is pressed. When monitor function is activated, "MON" icon appears.

■ Monitor Momentary

- **DTMF/2-tone/DMS**

While pressing this key, "MON" appears and the squelch unmutes if a carrier is present, regardless of the specified signalling (including option signalling).

If released, "MON" disappears, and the squelch mutes.

- **5-tone**

Depend on monitor function in the system parameters.

You can select either QT/DQT or 5-tone decoding to be canceled while pressing [Monitor] key.

When monitor function is activated, "MON" icon appears.

■ Operator Selectable Tone

When this key is pressed, the "OST" appears and encode/decode QT/DQT is switched to the OST tone pair. If pressed again, the "OST" display goes off and encode/decode QT/DQT returns to transceivers preset.

When this key is held down for one second, the transceiver enters "OST select mode". In this mode, the display shows OST No. or OST name which is set to the channel and operator can select one of OST tone pair using [Channel up], [Channel down] key.

If pressed this key again, the displayed OST code is memorized to the channel, the transceiver exits from the OST select mode, returns to normal channel display and "OST" display.

16 kinds of OST tone pairs can be programmed in the operator selectable tone window. While in the OST select mode, the transceiver does not look back at the priority channel in the scan resume mode.

■ Public Address

Public address amplifies the microphone audio, and outputs it through a PA speaker. PA is activated by pressing this key. A confirmation tone sounds, and the display shows "PA". PA can be activated at anytime (scanning or non-scanning).

The transceiver continues to scan & receive calls while in PA mode. Pressing PTT activated PA, and will override an incoming call anytime; however no transceiver transmission takes place.

If this key is pressed again, a confirmation tone will sound, the display will return to the normal channel or SCAN display, and the PA function will turn off.

■ Queue

Press [Queue] key to toggle Queue mode on or off. When it is on, you will see the contents of the queue buffer. You can scroll the queue buffer using the [Channel up], [Channel down] or [2]/[8] keys on the microphone.

When you are in Queue mode, [D] or [6] key to toggle the Selcall and Status displays. When you are in Queue mode, press the [C] or [4] key to toggle the Code and Selcall/Status displays.

Hold down the [D] or [6] key to delete the top stack of the Queue buffer. Hold down the [C] or [4] key to cancel Queue mode and return to normal operation.

■ Radio Password

Backup is done even if the power supply is cut off. A lock is not canceled unless a proper password is inputted. The character which can be inputted is to 6 digits with the number of 0 to 9. A lock is canceled if it is the same as code set up at "Optional feature - Radio password".

If the entered radio password is incorrect, the "Key input error tone" sounds and the transceiver remains in "LOCK1" screen.

OPERATING FEATURES

■ Receive Entry (5-tone)

Press [Receive entry] key to enter the desired Selcall code you want to receive. This function can be activated only when "RX address" is set to the channel and "selectable receive digit" has been entered.

When you enter Receive entry mode, the "RX address" number appears on the LCD. To enter Selcall number, use the keypad (keypad model) or use the [Channel up], [Channel down] keys to select a number. Then press [C] key to enter the selected number. The selected digit will shift left to enter the next digit.

Press [D] key to move the cursor 1 position right. Hold down [D] key ([6] key on a keypad) to clear the entered number.

■ Scan

Press the [Scan] key to toggle scanning the channels on and off. When the transceiver is scanning, "Revert channel display" is temporary disabled and the SCN icon and "–SCAN–" appear.

■ Scan Delete/Add

Press the [Scan del/add] key to temporarily delete or add each channel from/to the scan list. When a channel is added to the scan list, "▼" appears on LCD.

When the transceiver exits Scan mode, the added or deleted channels are erased from the scan list. The original scan list is restored.

■ Scrambler

Press the [Scrambler] key to toggle the Scrambler on or off. When it is activated, "_" (underscore) appears on LCD.

If you hold down the [Scrambler] key for more than 2 seconds, the transceiver enters "Scrambler code select mode". You can select the Scrambler code [1 to 16] using the [Channel up], [Channel down], or [2], [8] keys. (Voice scrambler unit must be installed.)

■ Selcall Entry

Press [Selcall entry] key to enter the desired Selcall code you want to call.

• 5-tone

This function can be activated only when "TX address" is set to the channel and "Selectable selcall digit" has been entered. When you enter Selcall entry mode, the "TX address" number appears on the LCD.

• DTMF/2-tone/DMS

A transceivers unit ID is defined by a combination of 3-digit fleet and 4-digit ID numbers.

To enter Selcall number, use the keypad (keypad model) or use the [Channel up], [Channel down] keys to select a number. Then press [C] key to enter the selected number. The selected digit will shift left to enter the next digit.

Press [D] key to move the cursor 1 position right. Hold down [D] key ([6] key on a keypad) to clear the entered number.

■ Selcall List

Press [Selcall list] key to enter Selcall list mode.

• 5-tone

Select the check box of "Selectable selcall digit". The number of digit you selected in "Selcall list" will be displayed on LCD. If "Selcall list" has not been programmed, same digits of Selcall list code that you checked as "Selectable selcall" digits will appear on LCD.

• DTMF/2-tone/DMS

The ID list code of DMS will appear on LCD.

To select the Selcall list, use [Channel up]/[Channel down] key or [2]/[8] key on the microphone keypad.

■ Selcall + Status Entry

Select the selcall number you wish to call. Press [Selcall + Status entry] key to enter "Selcall entry mode". It works as "Selcall entry mode" mode. If you press [CALL] or [✱] key again, it works as "Status entry mode".

■ Selcall + Status List

Select the selcall number you wish to call. Press [Selcall + Status list] key to enter "Selcall list select mode". It works as "Status list" mode. If you press [Selcall + Status list] key again, it works as "Status list select mode".

■ Send GPS (DTMF/2-tone/DMS)

You can send the GPS location data manually. To perform the operation, you have to install a GPS receiver with NMEA-0183 output. (GPS receiver must be installed.)

■ Shift

It allows you to enable [Shift + Function] key access. When [Shift] key is pressed, SFT appears on LCD.

■ Squelch Level

Press [Squelch level] key to enter "Squelch level adjustment mode". The squelch level can be adjusted by [Channel up]/[Channel down] key or [2]/[8] key on the microphone keypad. Press [Squelch level] key again to store the adjusted squelch level.

■ Squelch Momentary

Press [Squelch momentary] key to force the squelch unmute. "MON" icon appears on LCD and BUSY LED (Green) lights. If released, the squelch unmutes and "MON" disappears. Also, BUSY LED (Green) goes off.

■ Squelch Off

Press [Squelch off] key to force the squelch unmute. "MON" icon appears on LCD and BUSY LED (Green) lights. If the key is pressed again, the squelch unmutes and "MON" disappears. Also, BUSY LED (Green) goes off.

OPERATING FEATURES

■ Status Entry (5-tone)

It allows the operator to input the status and transmit it to the base station.

Both TX address and "Selectable status digit" must be programmed to perform the operation. Press [Status entry] key to access Status entry mode. "TX address" of the channel appears on LCD.

Enter the desired code using a numeric keypad. If the transceiver does not have the numeric keypad, you can use [Channel up]/[Channel down] key to select the desired number and press [C] key to enter. The cursor moves to next position.

■ Status List (5-tone)

Press [Status list] key to enter Status list mode. Select the check box of "5-tone - System parameters - Selectable status digit". The number of digit you selected in "5-tone - Status list" will be displayed on LCD. If "Status list" has not been programmed, same digits of status list code that you checked as "Selectable status" digits will appear on LCD.

To select the status list, use [Channel up]/[Channel down] key or [2]/[8] key on the microphone keypad.

■ Talk Around

When Talk around function is activated, "TA" appears and the transceiver transmits on the receive frequency, using receiver's QT/DQT code.

The operator can call the other party directly (without repeater).

■ Transfer (5-tone)

When you select "5-tone" for "Signalling type for decode", this function is used for transmitting 5-tone code. Press the [Transfer] key to activate the transfer function. "TRANSFER" appears on the LCD.

When the target 5-tone code is received, you can select to transfer the code to another transceiver. When a mobile transceiver receivers the target 5-tone code, a mobile transceiver transfers the received 5-tone code to a portable.

When "Special setting" is selected (enabled) and using decode format, this parameter is not valid.

■ None

When you press this key, the transceiver emits the "Key input error tone" (no function is performed).

■ Volume Up/Down

When this key is pressed, the volume level is increased/decreased and repeats if held for 200ms or longer.

■ Function Table

Function	DTMF/2-tone/DMS	5-tone
None	Yes	Yes
Auto dial	Yes	Yes
Auto dial programming	Yes	Yes
AUX A	Yes	Yes
AUX B	Yes	Yes
Note : Only when voice scrambler is not selected.		
Call 1	No	Yes
Call 2	No	Yes
Call 3	No	Yes
Call 4	No	Yes
Call 5	No	Yes
Call 6	No	Yes
Channel down	Yes	Yes
Channel entry	Yes	Yes
Channel name	Yes	Yes
Channel up	Yes	Yes
Emergency call	Yes	Yes
Fixed volume	Yes	Yes
Group down	Yes	Yes
Group up	Yes	Yes
Home channel	Yes	Yes
Horn alert	Yes	Yes
Key lock	Yes	Yes
Monitor	Yes	Yes
Monitor momentary	Yes	Yes
Operator selectable tone	Yes	Yes
Public address	Yes	Yes
Queue	Yes	Yes
Radio password	Yes	Yes
Receive entry	No	Yes
Scan	Yes	Yes
Scan delete/add	Yes	Yes
Scrambler	Yes	Yes
Selcall entry	Yes	Yes
Selcall list	Yes	Yes
Selcall + Status entry	Yes	Yes
Selcall + Status list	Yes	Yes
Send GPS	Yes	No
Shift	Yes	Yes
Squelch level	Yes	Yes
Squelch momentary	Yes	Yes
Squelch off	Yes	Yes
Status entry	No	Yes
Status list	No	Yes
Talk around	Yes	Yes
Transfer	Yes	Yes
Volume down	Yes	Yes
Volume up	Yes	Yes

OPERATING FEATURES

2-3. Front Panel Displays and Indicators

① Sub display

Displays the system, channel and group numbers. Also displays various functions, such as TA.

② P (Priority) indicator

The P indicator (P) appears when a selected channel is programmed as priority.

③ MON (Monitor) indicator

The MON indicator appears when the button programmed as MONITOR is pressed.

④ SVC (Service) indictor

This icon is not used this transceiver.

⑤ SCN (Scan) indicator

The SCN indicator appears when using scan mode.

⑥ AUX (Auxiliary) indicator

Appears when the auxiliary function is activated (ON) by pressing the AUX-A key.

⑦ Handset indicator

This icon is not used this transceiver.

⑧ MAIL indicator

Flashes when a status message (5-tone or DMS) is received. Lights when a status message is stored in the stack memory.

⑨ Alphanumeric display

The twelve-character dot matrix alphanumeric display shows the system/group numbers. You can program system/group names with up to ten characters in place of these numbers. The left display is used as an add indicator (▼) and the right is used for the selective call (✱) or scrambler (_) function. The add indicator shows the channels unlocked out of the scanning sequence. Selective call and scrambler are optional functions that can be programmed.

Dispalys received messages when using 5-tone or DMS.

⑩ A,B,C,D key

These keys are programmable function (PF) keys.

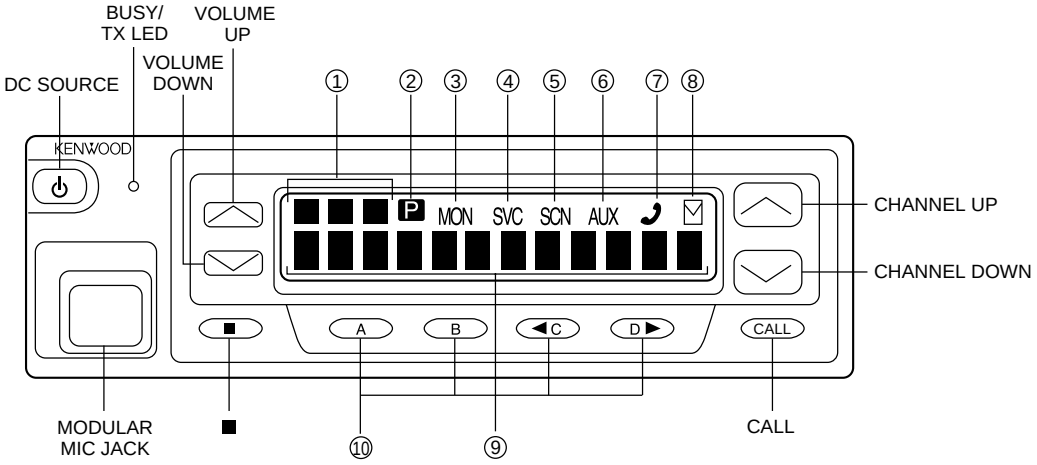

Fig. 1

3. Scan Operating

■ Scan types

• Single group scan

You can scan all valid (ADD) channels in the displayed group that can be selected with the group up/down key.

• Multiple group scan

You can scan all valid (ADD) channels in the all valid (ADD) group.

■ SCAN start condition

One or more non-priority channels must be added to all channels that can be scanned. The transceiver must be in normal receive mode (PTT off).

When you activate the key programmed to the scan function, the scan starts. The scan icon "SCN" lights and "–SCAN–" or revert channel (programmable) is indicated on alphanumeric display.

■ Scan stop condition

The scan stops temporarily if the following conditions are satisfied.

1) A carrier is detected, then signalling matches on channels for which receive the signalling is set by the programming software.
2) A carrier is detected on the channels for which receiving signalling is not set by the programming software or when the monitor (signalling cancel) function is activated.

OPERATING FEATURES

■ Scan channel types

1) Priority channel is the most important channel for the scan, and always detects a signal during scan and when the scan stops temporarily.
2) Non-priority channels detects a signal during scan. For the channels that can be selected with the group or channel up/down key when the scan does not occur, adds an indicator "▼" lights.

■ Priority channel setting

A priority channel can be set as follows with the programming software (KPG-60D).

1) Specify a priority channel as a fixed priority channel.
2) Make a selected channel, a priority channel.

■ Scan type according to the priority channel

1) When no priority channel is set : Only the non-priority channels are scanned.
   If a non-priority channel stops temporarily, it stops until there is no signal on the channel.
2) When priority channel is set : Either priority channel is scanned.
   If a non-priority channel stops temporarily, a priority channel signal is detected at certain intervals.
   If a priority channel stops temporarily, it stops until there is no signal on the priority channel.

■ Revert channel

The revert channel is used to transmit during scanning and set by the programming software (KPG-60D).

1) Priority
   The transceiver reverts to the priority channel.
2) Priority with talkback
   The transceiver reverts to the priority channel.
   If you press PTT during a resume timer (dropout delay time, TX dwell time) or calling, you can transmit on current channel to answer to the call however revert channel is set to priority channel.
   After resume time, scan re-starts and transmission channel is return to priority channel.
3) Selected channel
   The transceiver reverts to the channel before scanning or the channel that you changed during scan.
4) Last called channel
   The transceiver reverts to the last called channel during the scan.
5) Last used channel
   The transceiver reverts to the last used (transmitted) channel during scan. "Last used" revert channel includes talkback function.
6) Selected with talkback
   The transceiver reverts to the channel before scanning or the channel that you changed during scan.

■ Scan end

When you reactivate the key programmed to the scan function during scan mode, the scan ends.

The scan icon "SCN" and "–SCAN–" or revert channel (programmable) display goes off.

■ Temporarily delete/add

It is possible to delete or add channel temporarily during scan. When scan stops on unnecessary channel for example by interference of the other party, activate the delete/add function (for example press the key), then that channel is deleted temporarily and scan re-start immediately.

When you would like to add the deleted channel temporarily to scan sequence, select the desired (deleted) channel during scan, activate the delete/add function (for example press the key) before scan re-start.

That channel is added temporarily to scan sequence. The temporary deleted or added channels are returns to pre-set delete/add, when the transceiver exits from scan mode.

■ Keypad operation

This parameter selects the default use of the numerical field of the keypad. You can select from "DTMF", "Selcall entry", "Status entry" and "OST".

In the case of "OST"; Enter to use the keypad to recall OST directly. To recall OST memory 1 to 9, press the OST number directly for 1 second. To recall OST memory 10 to 16, press [✱] for 1 second, then press [0] to [6].

Example; Recall OST memory 15 : [✱] [5]

When OST memory is recalled by keypad [1] to [9], the "OST" display lights and OST is turned on. If the keypad [#] is pressed, OST is turned off, and the "OST" display goes off.

■ Squelch logic signal

This signal is useful for external radio control units which require a signal at the time of carrier operate relay or tone operate relay.

■ TX sense

Select one of the following three output functions for data communication.

- **MIC PTT**
  Indicates the state of the microphone PTT.
  MIC PTT on = Low, MIC PTT off = High

- **Ext PTT**
  Indicates the state of the Acc PTT input.
  Ext PTT on = Low, Ext PTT off = High

- **TX line**
  Indicates the actual transmitter activity.
  TX on = Low, TX off = High

OPERATING FEATURES

■ Com port

- **Com 0**

This function selects the external serila port function at the microphone jack (TXD/RXD). PC programming is accepted, regardless of this setting.

- **Com 1**

This function selects the external COM1 pin serial port function on the KCT-19 accessory jack. If the transceiver is installed GPS unit, this function must be set up in "GPS".

- **Com 2**

This function selects the external COM2 pin serial port function on the KCT-19 accessory (RXD2 (AHK)/TXD2 (PTT)) and the external serial port function (TXD2/RXD2).

4. Details of Features

■ Time-out timer

The time-out timer can be programmed off or in 30 seconds increments from 30 seconds to five minutes. If the transmitter is keyed continuously for longer than the programmed time, the transmitter is disabled and a warning tone sounds while the PTT button is held down. The alert tone stops when the PTT button is released.

■ Sub LCD display

You can use 3-digit the display to display the channel number or group number. It is useful when the main (12-digit) display indicates group or channel name or other functions.

■ Selective call alert LED

You can select whether or not the LED on the transceiver flashes in an orange color when selective call was occurred.

■ PTT ID

PTT ID provides a DTMF or FFSK (DMS : Fleet-ID) ANI to be sent with every time PTT (beginning of transmission, end of transmission, or both).

You can program PTT ID "on" or "off" for each channel. The contents of ID are programmed for each transceiver.

The timing that the transceiver sends ID is programmable.

BOT : DTMF ID (BOT)/FFSK ID is sent on beginning of transmission.

EOT : DTMF ID (EOT)/FFSK ID is sent on end of transmission.

Both : DTMF ID (BOT)/FFSK ID is sent on beginning of transmission and DTMF ID (EOT)/FFSK ID is sent on end of transmission.

■ Radio password

When the password is set in the transceiver, user can not use the transceiver unless enter the correct password.

This code can be up to 6 digits from 0 to 9 and input with the key, and [CALL] key.

■ Off hook decode

If the Off hook decode function has been enabled, removing and replacing the microphone on the hook has no effect for decoding QT/DQT and option signalling.

■ Timed power off

This function works as "Automatic Power Switch Off".

Timed power off timer starts from the ignition-off. After the timer expires, the radio will automatically turn off. The timer will be reset if the ignition is turned on and off.

This function requires ignition-sense. Connect the ignition-line to the 9-pin connector which is located at the rear of the radio.

After the timer expires, press the power switch to turn on the radio.

If you configured the 5-tone model, the transceiver executes the encode script defined in KPG-60D. After the encode script is finished, the transceiver turns off itself.

■ Horn alert

If you are called from the base station using 2-tone/DTMF/5-tone while you are away from your transceiver, you will be alerted by the vehicle horn or some other type of external alert. To turn horn alert function on, press the [Horn Alert] key.

Either continuous or non-continuous operation can be set by the FPU. The horn alert port is enabled or disabled as follows;

Off hook horn alert	Hook off	Hook on
Enable	Yes	Yes
Disable	No	Yes

- **Non-continuous (Pulse)**

The horn alert port, HOR, is turned on and off as follows;

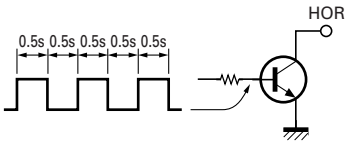

- **Continuous**

Horn alert can be reset by setting an expiration time from the FPU or setting off hook.

OPERATING FEATURES

■ "TOT" pre-alert

The transceiver has "TOT" pre-alert timer. This parameter selects the time at which the transceiver generates "TOT" pre-alert tone before "TOT" is expired.

"TOT" will be expired when the selected time passes from a TOT pre-alert tone.

■ "TOT" re-key time

The transceiver has "TOT" re-key timer. This timer is the time you can not transmit after "TOT" exceeded. After "TOT" re-key time expired you can transmit again.

■ "TOT" reset time

The transceiver has "TOT" reset timer. This timer is the minimum wait time allowed during a transmission that will reset the "TOT" count.

"TOT" reset time causes the "TOT" to continue even after PTT is released unless the "TOT" reset timer has expired.

■ OST (Operator Selectable Tone)

The transceiver is capable to have "OST" function and 16 tone pair (QT/DQT) with max 10-digit name for each tone pair.

• "OST" back up

The transceiver is programmable the selected "OST" code is memorized or not. If you set to Disable (no memorized), the "OST" function always starts at "off".

■ Clear to transpond

The transceiver waits the transpond of 5-tone/2-tone / DTMF if channel is busy until channel open. This feature prevents the interference to other party.

5. Option Signalling (DTMF/2-Tone)

Built-in DTMF decoder is available for option signalling.

Built-in 2-tone decoder is available for option signalling.

It is possible to use individual call, group call, stun, kill. Stun and kill are used with DTMF only.

If the option signalling matches, a predetermined action will occur.

If option signalling matches on a group/channel which is set up with option signalling, the option signalling indicator (✱) will flash and option signalling will be released. The transpond or alert tone will sound.

If the selective call alert LED is set up, the orange LED will flash.

While option signalling matches (or if option signalling is deactivated when you are transmitting), you can mute or unmute ID/QT/DQT/Carrier.

■ AND/OR

Option signalling match conditions can be selected with AND/OR logic.

	Alert/Transpond
AND	Triggers at match with QT/DQT/ID+DTMF (2-tone); Both
OR	Triggers only for match with DTMF (2-tone); Option
	AF mute open
AND	Triggers at match with QT/DQT/ID+DTMF (2-tone); Both
OR	Triggers only for match with QT/DQT/ID; Signalling

Even if set for OR, AF mute cannot be canceled just by a match with DTMF.

In channels not set with QT/DQT, signalling is a match just by rceiving the carrier.

■ Auto Reset

If option signalling matches a group set up with option signalling, option signalling is released. After matching option signalling, option signalling will temporarily reset automatically.

■ Stun/Kill

If the stun code matches, a predetermined action will occur. Whether option signalling is activated or not, when stun code matches on any channel, the transceiver will become stun or kill.

While stun is active ("LOCK2" appears), if the stun code + "#" code is received, stun will disactive. While kill is active ("ERROR" appears), the transceiver will be disable all functions. The transceiver must be reprogrammed by the FPU (KPG-60D) to operation again.

6. Alphanumeric Two-way Paging Function (Digital Message System : DMS)

■ General

The Alphanumeric Two-way Paging Function (DMS) is a Kenwood proprietary protocol. It enables a variety of paging functions.

■ ID Construction

A radio unit ID is defined by a combination of 3-digit Fleet and 4-digit ID numbers. Each radio unit must be assigned its own Fleet and ID numbers.

■ PTT ID

A pre-programmed unique ID can be sent at the beginning of transmission and/or the end of transmission to identify which radio unit is on air.

OPERATING FEATURES

■ Selective Call (SELCALL)

This is a voice call to a particular individual or group of stations.

- **Example of call types;**

  [100][ALL] : <Group Call>
  All the units whose fleet number is "100" are called.
  [100][1000] : <Individual Call>
  The unit, whose the fleet number is "100" and ID number is "1000", is called.
  [ALL][ALL] : <Broadcast Call>
  All the units are called.
  [ALL][1000] : <Supervisor Call>
  All ID "1000" are called regardless of their fleet number.

- **Unit ID Encode Block**

  Encode ID Block can be set to limit manual dial ID. The radio unit will not accept an ID other than these IDs which are entered from the keypad. If Inter-fleet Call is enabled, block ID setting affects each fleet group.

■ Status Message

Using a 2-digit number, you can send and receive a Status message which may be decided in your talk group. Each Status may be displayed with 16 alphanumeric characters if programmed in the radio. A maximum of 15 received messages can be stored in the stack memory, and it can be reviewed after reception. If the message memory becomes full, the oldest one will be erased. The stack memory will be cleared by turning radio power off.

- **Status 80~99 (Special)**

  Status numbers from 80 to 99 are reserved for special purposes. Entering these statuses from the DTMF keypad can be inhibited.

  Please notice that the following status numbers are used for special purposes;

  80~89 : Reserved for future use.
  90 : Remote kill on. Disable all transceiver functions.
  91 : Remote stun on. The transceiver cannot operate.
  92 : Turns stun off.
  93 : Spare.
  94 : Acknowledgement status sent when the radio unit is in stun mode.
  95~98 : Reserved for future use.
  99 : Emergency Status.

Note : Remote stun works with DTMF stun function also.

- **Automatic Status Response**

  If you pre-select a status number and leave the radio in the Status Mode, it can automatically respond with the selected status number upon request from the base station. (The request function is initiated by serial control on the base station (Optional).)

■ Short Messase (Optional)

A maximum of 48 characters can be sent (External equipment is required). Received Short Messages will be displayed in the same manner as a Status Message. A maximum of 15 received messages can be stored in the stack memory. In the Stack Mode, 3-digit LCD indicates the received Short Message as "Q1"~"Q15".

■ Long Message

A maximum of 4096 characters can be sent (External equipment is required). Received Long Message will not be displayed or stacked in the radio memory but is output through the COM (Data) port.

■ Emergency Function

Emergency status 99 will be sent at the beginning of each emergency transmission.

- **Emergency Status response**

  Either "Horn" or "Alert" can be selected for the called radio unit's response to reception of status 99 which is used as an emergency status.

■ Other Functions

- **Manual Dial**

  Fleet, ID and Status numbers can be entered from DTMF keypad. (DTMF microphopne is required.)

- **Data TX with QT/DQT**

  Whether programmed QT/DQT is modulated or not with a data transmission except for Selcall. A radio unit can receive a data message regardless of QT/DQT if the receiving unit is not scanning.

- **DMS Baud Rate**

  FFSK data baud rate setting. The same rate must be set as a communication partner.
  1200bps :
  Data communication is made in 1200bps. The communication area is much wider than 2400bps. Recommended for repeater operation.
  2400bps :
  Data communication is made in 2400bps. The communication area is narrower than 1200bps, but it will decrease the data traffic. Data rate 2400bps may not work properly depending on the repeater's characteristic.

- **Inter-Fleet Call**

  Inter-fleet calls allow a radio of one fleet number to call a radio with a different fleet number (radio users can manually dial a unit ID with a different fleet number).

- **Status/Short/Long Message on Data Group/Channel**

  Status/Short/Long Message transmission is made whether on the Data Group/Channel.

- **Status/Short/Unit ID Message Serial Output**

  Whether a received Status/Short message or PTT ID is outputed or not to serial port.

OPERATING FEATURES

■ GPS Report

A NMEA-0183 GPS unit must be installed.

- **GPS Report Mode**

GPS data can be sent automatically or upon request. Manually sending GPS data works regardless of this setting.

Auto : GPS data is sent both automatically and by request. GPS Auto TX Interval and GPS Time Mark must be adjusted if required.
Poll : GPS data is sent upon request from dispatcher.

- **GPS Report Interval**

Interval time between automatic GPS data transmissions.

- **GPS Time Mark (Per Mobile)**

The amount of time from the 0 (zero) minute of the standardized GPS UTC time to starting the first transmission of GPS data. It must be set to a different value for each radio unit to avoid a transmission crash.

- **Send GPS**

Pressing this key causes the transceiver to send a single GPS data.

- **GPS Report On Data Group/Channel**

GPS data transmission is made on the Data Group/Channel in conventional format.

- **Received GPS Data Output**

Any selected sentence can be output through the radio serial port (COM1).

1) MAP HEADER NMEA1 ($GPGGA), NMEA2 ($GPGLL), NMEA3 ($GPRMC)
NMEA-0183 standard command. This should be set according to your PC application.

2) MAP HEADER KW1 ($PKLDS)
This is a Kenwood original sentence which consists of "$GPGLL + Fleet + ID + Status". This item should be set according to your PC application.

3) MAP HEADER KW2 ($PKLID)
This is a Kenwood original sentence which consists of "Fleet + ID". This should be set according to your PC application.

■ Parameters

- **GTC Count**

Number of "Go To data Channel" messages to be sent before transmitting a data message if it is being made on Data Group/Channel. If a radio unit receives a GTC message, it will move to the Data Group/Channel of the current group. Increase this item to make sure the called radio unit moves to the Data Group/Channel.

- **Random Access (Contention)**

When a channel is busy, radio unit will not transmit (depending on its Busy Channel Lockout setting). As soon as a channel is cleared, some transmissions may crash. Random access is used to avoid this by employing a random transmission sequence.

- **Number of Retries**

Number of Retries is the maximum number of retry transmission when no acknowledgement is received in the Maximum ACK Wait Time. Increase this item to improve data communication reliability.

- **TX Busy Wait Time**

TX Busy Wait Time is the maximum amount of time before giving up the data transmission when the channel is busy. Also, this timer affects if it expires during Random Access period.

- **Maximum ACK Wait Time**

Maximum ACK Wait Time is the maximum amount of time to wait for an acknowledgement from the called radio unit. It is used as an interval time of retries. It must be set greater than the ACK Delay Time of the called radio unit.

- **ACK Delay Time**

ACK Delay Time is the amount of time from the end of receiving a data to the beginning of sending an acknowledgement. It should be adjusted as the repeater's hang-up delay time. Also, it must be set less than the Maximum ACK Wait Time of the calling radio unit.

- **TX Delay Time (RX Capture)**

TX Delay Time is the amount of unmodulated transmission to let the called unit stop scanning or exit its battery save mode. It is used only when starting a data communication sequence.

- **Data TX Modulation Delay Time**

Data TX Modulation Delay Time is the amount of time from the beginning of transmission to the beginning of a data modulation. It is used every time data is transmitted.

7. 5-Tone

When you select 5-tone model, you can set the following options.

When you select basic level features, only 1 frame 5-tone format can be programmed.

When you select full level features, up to 3 frame 5-tone format can be programmed.

Enabling "Setting level" on each menu, you can also use "Encode/Decode format". Using "Encode/Decode format", you can further program the transceiver to run the script.

■ 5-tone Standard

The selected 5-tone standard is used for 5-tone encoding and decoding.

Range; ZVEI, CCIR, EEA, PZVEI, DZVEI, PCCIR, PDZVEI, ZVEI-2, EIA, Natel, AP-369, Kenwood

OPERATING FEATURES

■ Monitor Function

You can select either QT/DQT or 5-tone decoding to be canceled when [Monitor] or [Monitor momentary] key is pressed. When monitor function is activated, "MON" icon appears.

When the transceiver is set up in "QT/DQT", cancels the decoding in QT/DQT decode. The squelch is controlled by the signal carrier only.

When the transceiver is set up in "5-tone", cancels the decoding in 5-tone decode. The squelch is controlled by QT/DQT decode only.

If QT/DQT code is programmed in QT/DQT decode, incoming signal must match the QT/DQT code to open the squelch.

■ Digit Entry Method

Receive, Selcall or Status digit appears when you enter their entry mode, pressing [Receive entry], [Selcall entry] or [Status entry] key, or "Keypad operation" is programmed to "Selcall entry" or "Status entry" and press [0] to [9] key.

You can select the operation of the function. Or the digit number when entering their entry mode appears.

When the transceiver is set up in "Overwrite", new their digit number will overwrite the previous their digit when entering their entry mode.

When the transceiver is set up in "Replace", new their digit number will overwrite the their digit that is programmed in RX address or TX address menu when entering their entry mode.

■ Busy Channel Lockout

You can inhibit the transmission while the channel is busy. You can program the following different conditions.

When the transceiver is set up in "Lockout 1"; Do not transmit when the transceiver is receiving the carrier. Transmit when the transceiver is not receiving the carrier.

When the transceiver is set up in "Lockout 2"; Do not transmit when the transceiver is receiving the carrier and QT/DQT code does not match. Transmit when the transceiver is not receiving the carrier or receiving the QT/DQT code matches.

■ Selectable Receive Digit

Select the check box to change receive code (maximum 8 digits) manually when receiving decode code. You cannot select selectable receive digit, store selcall digit and store status digit at the same time.

For example, the transceiver receives 5-tone code, #59401 when you have 4th and 5th digit checked in selectable receive digit menu. In this case, #01 is stored as receive code.

Press [Receive entry] key to enter receive entry mode. When you enter receive entry mode, you can change the receive code, #01. You can receive the receive code after the modification.

■ Selectable Selcall Digit

Select the check box to change selcall code (maximum 8 digits) manually when transmitting encode code. You cannot select selectable selcall digit and selectable status digit at the same time.

For example, the transceiver receives 5-tone code, #59401 when you have 4th and 5th digit checked in selectable selcall digit menu. In this case, #01 is stored as selcall.

Press [Selcall entry] key or "Keypad operation" to enter selcall entry mode. When you enter selcall entry mode, you can change the selcall code, #01. You can transmit the selcall after the modification.

■ Selectable Status Digit

Select the check box to change status code (maximum 8 digits) manually when transmitting encode code. You cannot select selectable selcall digit and selectable status digit at the same time.

For example, the transceiver receives 5-tone code, #5940167 when you have 6th and 7th digit checked in selectable status digit menu.

Press [Selcall entry] key or "Keypad operation" to enter status entry mode. When you enter status entry mode, you can change the status code, #67. You can transmit the status code after the modification.

■ Automatic Close

It compares the selected digits of RX address code in channel menu when the transceiver receives 5-tone signalling. If the selected digits matches to the received 5-tone code, the transceiver closes monitor. You can select maximum 8 digits of RX address.

■ Copy from TX/RX address

You can select to copy the digit to the memory when you change the channel, using [Channel up], [Channel down] key. The memory represents the code that is displayed by the keypad. Or key buffer, "^K1 ... ^K8" used by encode format.

Receive digit in "RX address" is copied when the channel is changed. Selcall/Status digit in "TX address" is copied when the channel is changed.

■ Encode Code

When "Special setting" is disabled, you can select the encode code to transmit when [Call 1 to 6] key is pressed. You can select up to 3 codes to transmit 3-frame 5-tone code. The encode code is transmitted from left to right digit. 24 different encode codes are available.

When "Special setting" is enabled, you can select the encode format setting from #1 to #32. You can select the encode format name, configured in encode format menu.

OPERATING FEATURES

■ Decode Code

When "Special setting" is disabled, you can select the decode code setting from #1 to #8. The transceiver tries to decode the selected decode code setting (maximum 8 different settings) at the same time. When the code matches in "5-tone code" menu, the transceiver operates as programmed in "Decode code" menu.

When "Special setting" is enabled, you can select the decode format setting from #1 to #32. You can select the decode format name, configured in decode format menu.

You can program the 5-tone code you want to receive for each channel. At the same time, you can stand-by for decoding a single tone.

If the 5-tone code set in your transceiver matches a received code. Monitor is activated and a beep sounds. You can display the received 5-tone code on the LCD screen and transmit an acknowledgment to the base station. Furthermore, you can activate the Horn alert, Transfer, Stun, and Kill features.

■ Selcall/Status List

You can program selcall or status message when you select the party from the list to make a 5-tone selective call. Or you want to display selcall (status) code or message when you receive the call. Maximum 8-digit can be programmed for the code and 100 different selcalls or status are available for selcall/status list.

You can assign 16 alphanumeric characters to each message.

■ Programmable Alert Tone

You can program the alert type from type 1 to type 8, when the expected 5-tone is received. You can program the number of times to repeat outputting and frequency and duration for the alert tone.

When you select "Special setting", you can further configure the beep tone type from No. 1 to No. 47, using the encode/decode format.

■ Encode/Decode Format

You can use encode/decode format script function when you select "Feature level" = Full and "Special setting" = Enabled.

In order to write the encode/decode format script, you need the technical knowledge of 5-tone signalling functions. Of course, you can write the script to perform all the functions that you can do with "Feature level" = Basic and Full and "Special setting" = Disabled. (Menu driven method)

In addition, you can write the original script to control various functions and signalling timing. Refer to each function of encode/decode format code for details. Sample scripts are also available in the KPG-60D.

You can create 32 different types of encode/decode formats. You can assign a name up to 12 characters for each encode/decode format.

8. Audible User Feedback Tones

The transceiver outputs various combinations of tones to notify the user of the transceiver operating state. The main tones are listed below.

■ Power on tone

This tone is output when the transceiver is turned on. (The high tone is output for 500ms.)

■ Alert tone

This tone is output when the transceiver is TX inhibition for TOT, battery warning and PLL unlocked. It is output until the PTT button is released.

■ Group call tone

Sounds when a group call with the correct DTMF/2-tone option signalling is received.

■ DMS signalling alert tone

Sounds when an individual call with the correct DMS signalling is received.

■ Individual call tone

Sounds when an individual call with the correct DTMF/2-tone option signalling is received.

■ Key press tone [A]

Sounds when a key is pressed. For toggle keys, sounds when toggle function is turned on (key press tone [B] sounds when it is turned off).

■ Key press tone [B]

Sounds when a key is pressed. For toggle keys, sounds when the toggle function is turned off (key press tone [A] sounds when it is turned on).

■ Key press tone [C]

Sounds when a key is pressed. Also sounds when storing data, adding a DTMF code to memory, and when changing test mode settings.

■ Key input error tone

Sounds when a key is pressed but that key cannot be used.

■ Roll over tone

Sounds at the smallest group/channel.

■ Transpond tone

Sounds when an individual call with the correct DTMF/2-tone option signalling is received. For group calls, only the group tone will sound, not the transpond tone.

■ Pre alert tone

Sounds prior to the TOT TX inhibit activation. If TOT pre alert is set, the tone sounds at the amount of time programmed, before the TOT expires (TOT time – TOT pre alert time = Pre alert tone sounding time).

REALIGNMENT

1. Modes

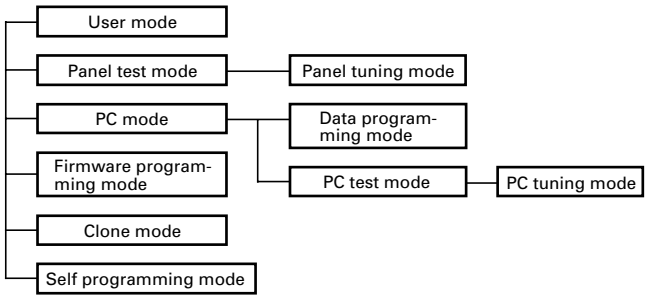

Mode	Function
User mode	For normal use.
Panel test mode	Used by the dealer to check the funda-ment characteristics.
Panel tuning mode	Used by the dealer to tune the radio.
PC mode	Used for communication between the radio and PC (IBM compatible).
Data programming mode	Used to read and write frequency data and other features to and from the radio.
PC test mode	Used to check the radio using the PC. This feature is included in the FPU. See panel test.
PC tuning mode	Used to tune the radio using the PC. This feature is included in the FPU. See panel tuning.
Firmware program-ming mode	Used when changing the main program of the flash memory.
Clone mode	Used to transfer programming data from one radio to another.
Self programming mode	Frequency, signalling and features write to the radio.

2. How to Enter Each Mode

Mode	Operation
User mode	Power ON
Panel test mode	[B]+Power ON
PC mode	Received commands from PC
Panel tuning mode	[Panel test mode]+[A]
Firmware programming mode	[A]+Power ON
Clone mode	[D]+Power ON
Self programming mode	[CALL]+Power ON

3. Panel Test Mode

Setting method refer to ADJUSTMENT.

4. Panel Tuning Mode

Setting method refer to ADJUSTMENT.

5. PC Mode

5-1. Preface

The TK-780 transceiver is programmed by using a personal computer, programming interface (KPG-46) and programming software (KPG-60D).

The programming software can be used with an IBM PC or compatible. Figure 1 shows the setup of an IBM PC for programming.

5-2. Connection Procedure

1. Connect the TK-780 to the personal computer with the interface cable.
2. When the Power switch on, user mode can be entered immediately. When PC sends command the radio enter PC mode, and "PROGRAM" is displayed on the LCD.
   When data transmitting from transceiver, the red LED is blinking.
   When data receiving to transceiver, the green LED is blinking.

Notes :

- The data stored in the personal computer must match model type, when it is written into the flash memory.
- Change the TK-780 to PC mode, then attach the interface cable.

5-3. KPG-46 Description (PC programming interface cable : Option)

The KPG-46 is required to interface the TK-780 to the computer. It has a circuit in its D-subconnector (25-pin) case that converts the RS-232C logic level to the TTL level.

The KPG-46 connects the modular microphone jack of the TK-780 to the computers RS-232C serial port.

5-4. Programming Software KPG-60D Description

The KPG-60D is the programming software for the transceiver supplied on two 3.5" floppy disks. This software runs under MS-Windows 95 or later on an IBM-PC or compatible machine.

The data can be input to or read from the transceiver and edited on the screen. The programmed or edited data can be printed out. It is also possible to tune the transceiver.

We recommend that install the KPG-60D for example to hard disk first then use it.

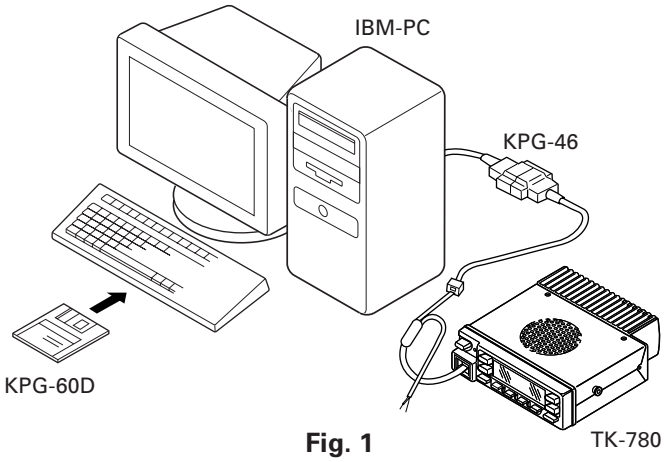

Fig. 1

REALIGNMENT

5-5. Programming With IBM PC

If data is transferred to the transceiver from an IBM PC with the KPG-60D, the destination data (basic radio information) for each set can be modified. Normally, it is not necessary to modify the destination data because their values are determined automatically when the frequency range (frequency type) is set.

The values should be modified only if necessary.

Data can be programmed into the flash memory in RS-232C format via the modular microphone jack.

KPG-60D instruction manual parts No. : B62-1315-XX.

6. Firmware Programming Mode

6-1. Preface

Flash memory is mounted on the TK-780. This allows the TK-780 to be upgraded when new features are released in the future. (For details on how to obtain the firmware, contact Customer Service.)

6-2. Connection Procedure

Connect the TK-780 to the personal computer (IBM PC or compatible) with the interface cable (KPG-46). (Connection is the same as in the PC Mode.)

6-3. Programming

1. Start up the programming software (Fpro. exe).
2. Set the communications speed (normally, 57600 bps) and communications port in the configuration item.
3. Set the firmware to be updated by File name item.
4. Turn the TK-780 Power ON with the [A] switch held down. Hold the switch down until the display changes to "PROG 57600". When "PROG 57600" appears, release your finger from the switch.
5. Check the connection between the TK-780 and the personal computer, and make sure that the TK-780 is in the Program mode.
6. Press write button in the window. A window opens on the display to indicate progress of writing. When the TK-780 starts to receive data, the [P] icon is blinking.
7. If writing ends successfully, the LED on the TK-780 lights and the checksum is displayed.
8. If you want to continue programming other TK-780, repeat steps 4 to 7.

Notes :

- This mode cannot be entered if the Firmware programming mode is set to Disable in the Programming software (KPG-60D).
- When programming the firmware, it is recommend to copy the data from the floppy disk to your hard disk before update the radio firmware.
  Directly copying from the floppy disk to the radio may not work because the access speed is too slow.

6-4. Function

1. If you press the [■] switch while "PROG 57600" is displayed, the version is displayed. If you press the [■] switch again while the version is displayed, "PROG 57600" is redisplayed.
2. If you press the [D] switch while "PROG 57600" is displayed, the display changes to "PROG 19200" to indicate that the write speed is low speed (19200 bps). If you press the [D] switch again while "PROG 19200" is displayed, the display changes to "PROG 38400", and the write speed becomes the middle speed (38400 bps). If you press the [D] switch again while "PROG 38400" is displayed, the display returns to "PROG 57600".
3. If you press the [D] switch while the version is displayed, the checksum is displayed. If you press the [D] switch again while the checksum is displayed, the version is redisplayed.

Note :

Normally, write in the high-speed mode.

7. Self Programming Mode

Write mode for frequency data and signalling etc. Mainly used by the person maintaining the user equipment.

7-1. Enter to the Self Programming Mode

Delete R614 (SELF, Figure 2) in the TX-RX unit (B/2) and turn the power switch on while pressing the [CALL] key. When enter the self programming mode, "SELF PROG" is displayed.

Note :

This mode (self programming mode) cannot be set when it has been disabled with the KPG-60D.

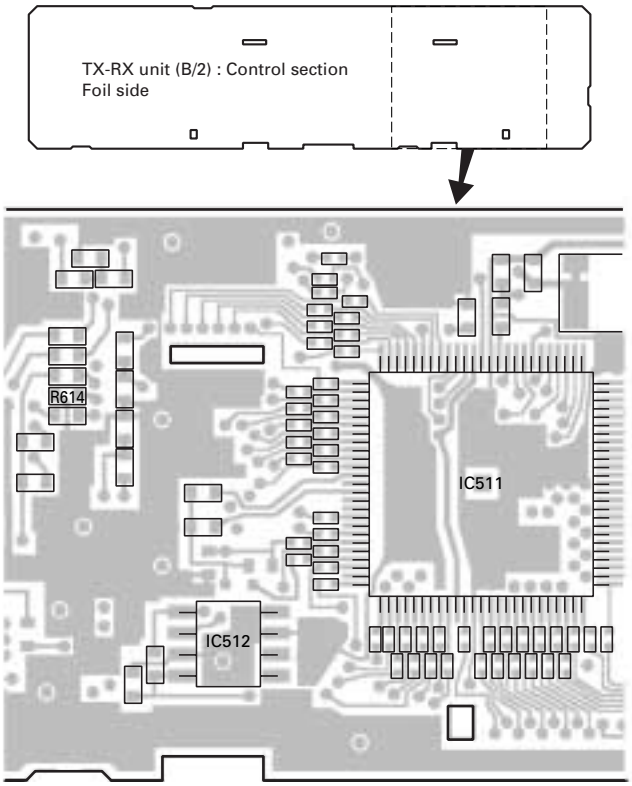

Fig. 2

REALIGNMENT

7-2. Channel Setting Mode

Each channel can be setup in its action mode by using the panel keys.

- Pressing [■] while "SELF PROG" is displayed will change to channel setting mode.
- Press [D] to select a setup item, then press [Channel up/down] to change the selection.
- By pressing [C], the displayed information is stored in memory, and the next item appears. By pressing [D], the displayed information is not stored in memory, and the next item appears.
- Press [■] to return to the original display ("SELF PROG").

The setup items fro channel setting mode are listed below.

Setup function	Display (3 character)	Remarks
Channel selection	CH or GRP	
RX frequency	RXF	[CALL] : Switches frequency on/off
		[B] : Changes the step value between 5kHz, 6.25kHz, and 1MHz
RX signalling	RXS	[CALL] : Switches between off, QT, and DQT.
		[B] : Switches between 1 step and standard
		[A] : Switches between DQT normal and invert
TX frequency	TXF	Same as RX frequency
TX signalling	TXS	Same as RX signalling
Scan del/add	SCN	DEL/ADD
RF power	PWR	HIGH/LOW
Beat shift	SFT	YES/NO
Wide/Narrow	W/N	WIDE 5k/WIDE 4k/NARROW
Compander	CMP	ON/OFF

7-3. Flow Chart

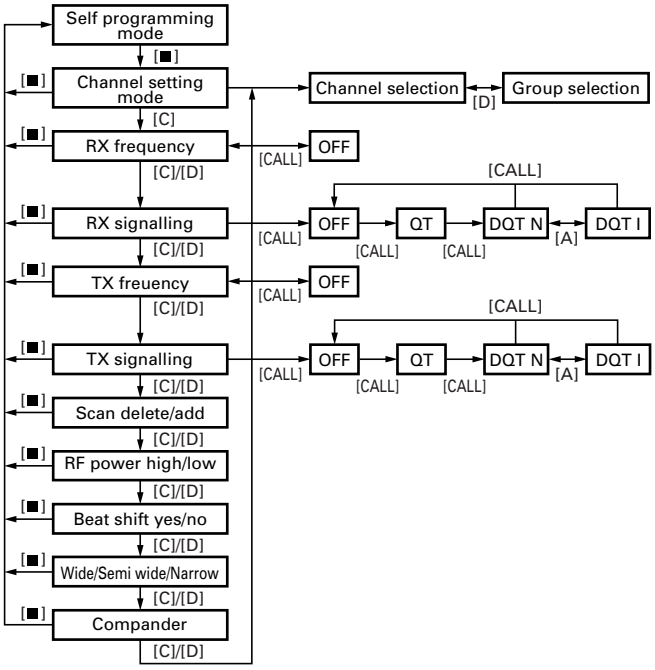

7-4. Memory Reset Mode

You can clear all settings you made in self programming mode, or you can return to the original display.

- Press [A] while "SELF PROG" is displayed will change the display to "CLEAR NO?".
- Press [Channel up/down] to change the display between "CLEAR NO?" and "CLEAR YES?".
- When "CLEAR YES?" is displayed, pressing [A] will set all data to default, and "ALL CLEAR" will appear on the display. Press [A] again to display "SELF PROG".
- When "CLEAR NO?" is displayed, pressing [A] will cancel the reset, and "SELF PROG" will be displayed.

INSTALLATION

1. Accessory Connection Cable (KCT-19 : Option)

The KCT-19 is an accessory connection cable for connecting external equipment. The connector has 15 pins and the necessary signal lines are selected for use.

1-1. Installing the KCT-19 in the transceiver

1. Remove the upper and lower halves of the transceiver case, and lift the DC cord bushing (❶) from the chassis.
2. Remove the pad as shown in Figure 1 (❷).
3. Insert the KCT-19 cable (❸) into the chassis (❹). The wire harness band (❺) must be inside the chassis.
4. Replace the DC cord bushing (❻).
5. Connect the KCT-19 to the TX-RX unit (A/2) as shown in Figure 2 (❼).
6. Connect the KCT-19 to the external accessory by inserting the crimp terminal (❽) into the square plug (❾), both of which are supplied with the KCT-19.

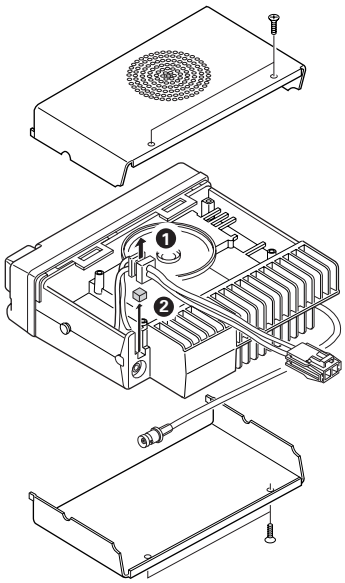

Fig. 1

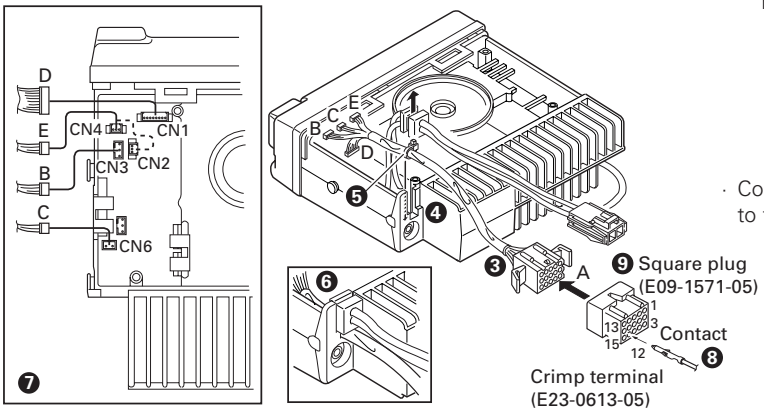

Fig. 2

1-2. KCT-19 Accessory Port Function

No. (A)	No. (B,C,D,E)		Name	Function	Note
1	D-2		AHK	External hook input	
2	D-5		ME	Microphone ground	*1
			AM	Speaker audio mute input	
3	D-3		IGN	Ignition sense input	
4	D-1		DEO	Receiver detector output	
5	D-6		MI	External microphone input	*1
			TXS	Transmitter sense output	
6	B-2		E	Ground	
7	B-3		SB	Switched B+, DC 13.2V output. Maximum 0.75A	
8	D-7		PTT	External PTT input, active low. During DTC is low, it works as DATA PTT.	
9	D-4		DI	Data modulation input	
10	B-1		HOR	Horn alert/call output	
11	D-8		SQ	Squelch detect output, active low.	
12	C-1		SP	Speaker audio output.	
13	E-1	CN2 and CN4	LOK	TX logic signal output, active low.	*1 *2
		CN2	AM	Speaker mute input.	
14	E-2	CN4	RXD	Serial control data input	*2
		CN2	MM	MIC mute input, active high.	
15	E-3	CN4	TXD	Serial control data output.	*2
		CN2 *1	DTC	Data control channel signal input, Data channel : Low	
			LOK	TX logic signal output, active low.	
			TXS	Transmitter sense output, Active high	
			FSW	Foot switch input, active low	

Note

*1 : The functions of A-2, A-5, A-13 (when connector E is connected to CN2), and A-15 (when connector E is connected to CN2) are changed as described in the jumper chart.

*2 : The functions of A-13, A-14 and A-15 are changed if the connector E is connected to CN2 or CN4 of the radio.

No.	CN2	CN4
E-1	LOK/AM	LOK
E-2	MM	RXD
E-3	LOK/DTC/TXS/FSW	TXD

· Connect CN6 of the radio to connector C of the KCT-19 instead of to the internal speaker connector, if use external speaker.

INSTALLATION

1-3. Data Equipment Connection

The jumpers must be set to either one for each function. Otherwise, the radio will not work properly.

ME/AM

R12 (0Ω)	R167 (0Ω)	Function / Default	
Yes	No	AM	Default
No	Yes	ME	

MI/TXS

R94 (0Ω)	R24 (0Ω)	Function / Default	
Yes	No	TXS	Default
No	Yes	MI	

LOK/AM

R5 (0Ω)	R6 (0Ω)	Function / Default	
Yes	No	AM	
No	Yes	LOK	Default

DTC/LOK/TXS/FSW

R168 (0Ω)	R84 (0Ω)	R51 (0Ω)	R13 (0Ω)	Function / Default	
No	No	No	Yes	LOK	
Yes	No	No	No	DTC	Default
No	No	Yes	No	TXS	
No	Yes	No	No	FSW	

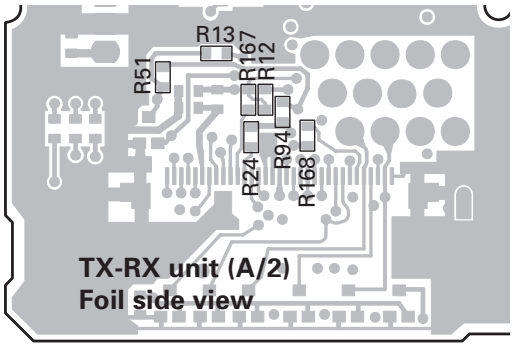

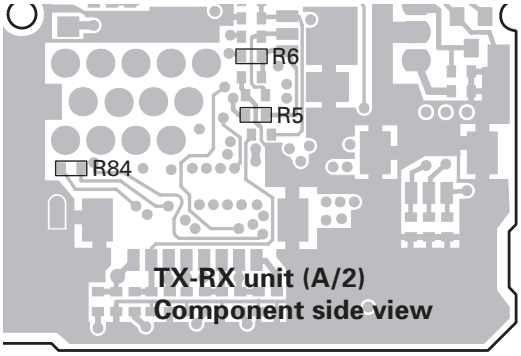

Note : The following parts are not installed at the time of shipping; R5,R13,R24,R51,R84,R167

2. Accessory Terminal (TX-RX Unit A/2)

2-1. External Connector Accessory Terminal Method

Connector No.	Pin No.	Pin name	I/O	Function
CN1	1	DEO	O	Detect signal output. (Output level : 250mVrms; standard modulation)
	2	AHK	I	External hook signal input. On hook : L, Off hook : H
	3	IGN	I	Ignition sense input.
	4	DI	I	External modulation signal input.
	5	ME	–	MIC earth.
		AM	I	Audio mute signal input.
	6	MI	I	Internal MIC input.
		TXS	O	Signal indicating whether the transceiver is transmitting or not. TX : H
	7	PTT	I	External PTT signal input. TX : L
	8	SQ	O	Squelch signal output. Signal logic type can select "Carrier operate relay" or "Tone operate relay". Active logic level or type can select in the KPG-60D.
CN2	1	AM	I	Audio mute signal input.
		LOK	O	TX logic signal output. Active logic level is low. Active type can be selectable in the KPG-60D.
	2	MM	I	MIC mute input.
	3	DTC	I	Data control channel signal input. Data channel : L, Normal channel : H
		TXS	O	Signal indicating whether the transceiver is transmitting or not. TX : H
		FSW	I	Foot switch signal input. Foot sw on : L, Foot sw off : H
		LOK	O	TX logic signal output. Active logic level is low. Active type can be selectable in the KPG-60D.
CN3	1	HOR	O	Horn alert signal output. Signal output for horn relay drive (open collector). L level during horn drive : Max. sink current 100mA. L level when AUX A is on.
	2	E	–	Earth.
	3	SB	O	Power output after power switch (DC 13.2V±15%, 0.75A max.).
CN4	1	LOK	O	TX logic signal output. Active logic level is low. Active type can be selectable in the KPG-60D.

INSTALLATION

Connector No.	Pin No.	Pin name	I/O	Function
	2	RXD	I	Serial data input 1. "Com1" port must be select "DATA"/"GPS" function in the KPG-60D.
	3	TXD	O	Serial data output 1. "Com1" port must be select "DATA"/"GPS" function in the KPG-60D.
CN5	1	PA	O	Relay for PA function in KAP-1 control signal. PA on : H, PA off : L
	2	SPO	O	Audio signal input from KAP-1.
	3	SPI	I	Audio signal output to KAP-1.
CN6	1	SP	O	Output for internal/external speaker.
	2	E	–	Earth.

3. Optional Board Terminal

Terminal is for mounting the option board are provided at the TX-RX unit (A/2) and TX-RX unit (B/2); Control section. The table below shows the correspondence between the board and terminals. Disconnect R529 and R571 in control unit when the scrambler board is attached.

The table below shown the differences between the schematic terminals and the PC board terminals.

Schematic diagram			PC board view	
Name	I/O	Function	Name	Unit
SB	O	Switched B+ (13.2V, 0.75A)	SB	TX-RX (A/2)
5C	O	5C	5C	TX-RX (A/2)
GND	–	Earth	E	TX-RX (A/2)
DEO	O	Detect signal output (Output level : 250mVrms; standard modulation)	DEO	TX-RX (A/2)
RXAI	I	RX audio input	RXAI	TX-RX (B/2)
RXAO	O	RX audio output	RXAO	TX-RX (B/2)
TXAI	I	TX audio input	TXAI	TX-RX (B/2)
TXAO	O	TX audio output	TXAO	TX-RX (B/2)
LOK	O	TX logic signal output. Active type can be selectable in the KPG-60D.	LOK	TX-RX (A/2)
OPT (EMG)	O	Option board select. Please select option board type in the KPG-60D.	OP	TX-RX (A/2)
CODE1	O	Option code 1 (for voice scrambler code 1)	C1	TX-RX (A/2)
CODE2	O	Option code 1 (for voice scrambler code 2)	C2	TX-RX (A/2)
CODE3	O	Option code 1 (for voice scrambler code 3)	C3	TX-RX (A/2)
CODE4	O	Option code 1 (for voice scrambler code 4)	C4	TX-RX (A/2)
SQ	O	Squelch signal output. Signal logic type can select "Carrier operate relay" or "Tone operate relay". Active logic level or type can select in the KPG-60D.	SQ	TX-RX (A/2)
TXD1	O	Serial data output 1	TD1	TX-RX (A/2)
RXD1	I	Serial data input 1	RD1	TX-RX (A/2)
TXD2	O	Serial data output 2	TD2	TX-RX (A/2)
RXD2	I	Serial data input 2	RD2	TX-RX (A/2)
RSSI	O	Receive signal strength indication	RSSI	TX-RX (A/2)
PTT	I	PTT	PTT	TX-RX (B/2)
MPTT	I	MIC PTT	MPTT	TX-RX (B/2)
FSW	I	Foot switch input	FW	TX-RX (A/2)

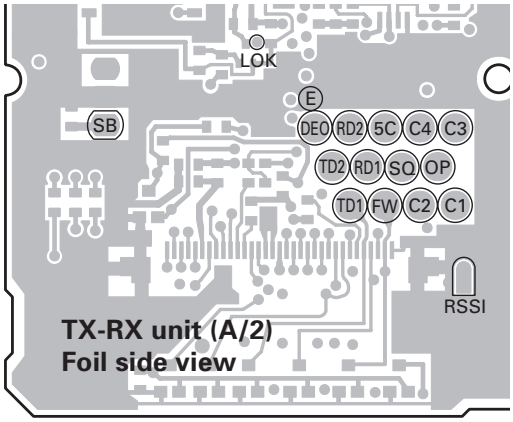

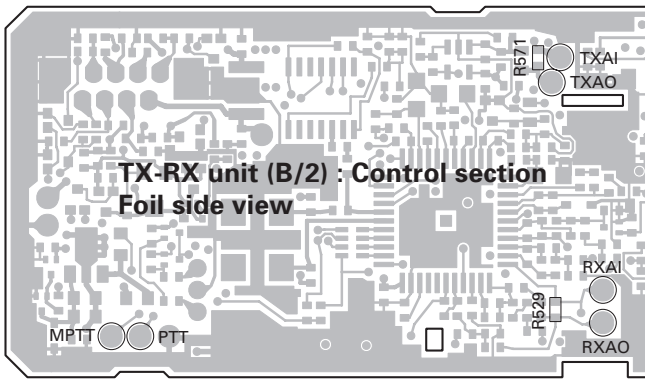

INSTALLATION

4. Ignition Sense Cable (KCT-18 : Option)

The KCT-18 is an optional cable for enabling the ignition function. The ignition function lets you turn the power to the transceiver on and off with the car ignition key.

If you use the Horn Alert function or the Manual Relay function, you can turn the function off while driving with the ignition key.

2-1. Connecting the KCT-18 to the Transceiver

1. Install the KCT-19 in the transceiver. (See the KCT-19 section.)
2. Insert the KCT-18 lead terminal (❷) into pin 3 of the square plug (❶) supplied with the KCT-19, then insert the square plug into the KCT-19 connector (❸).

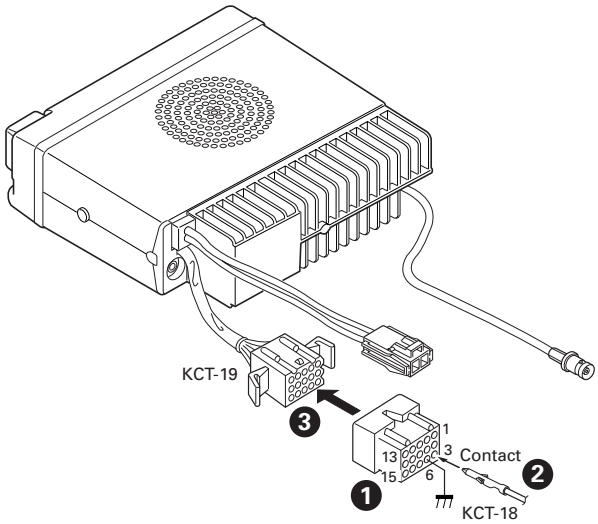

Fig. 3

4-2. Modifying the Transceiver

Modify the transceiver as follows to turn the power or the Horn Alert or Manual Relay function on and off with the ignition key.

1. Remove the lower half of the transceiver case.
2. Set jumper resistors (0Ω) R151 and R152 of the TX-RX unit (A/2) as shown in Table 1.

Operation when KCT-18 is connected	R151	R152
KCT-18 cannot be connected	Enable	Enable
Power on/off and Horn Alert or AUX-A on/off	Disable	Enable
Horn Alert or AUX-A on/off, Timed power off	Enable	Disable
Power cannot be turned on	Disable	Disable

Table 1 R151 and R152 setup chart

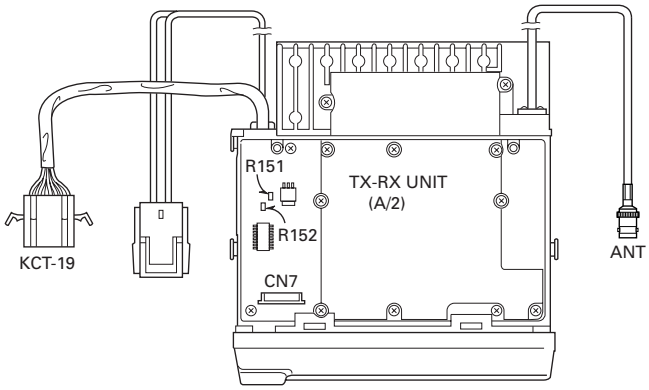

Fig. 4

5. Optional Voice Scrambler Function

The optional voice scrambler function can be used by two methods.

1. Assign this function to the Scrambler key by using the programming software (KPG-60D).
   When the Scrambler key is pressed, the [...] indicator comes on, and the optional (scrambler) function is enabled.
   When the key is pressed again, the [...] indicator goes off and the function is disabled.
2. Assign the optional scrambler function to each channel by using the programming software (KPG-60D). The optional scrambler function can be used without pressing the Scrambler key.

5-1. Code Setting

The code can be set by two methods.

1. Hold down the Scrambler key to enter the code setting mode. Codes 1 to 16 will be displayed. Set a code by turning the [Up/Down] key. When the Scrambler key is pressed again, the code setting mode terminates.
2. Set a code for each channel by using the programming software (KPG-60D).

5-2. Voice Scrambler Board Connection

- **Modification**

1. Remove the upper half of the case of the TK-780.
2. Remove R529 and R571 on the TX-RX unit (X57-614 B/2).

INSTALLATION

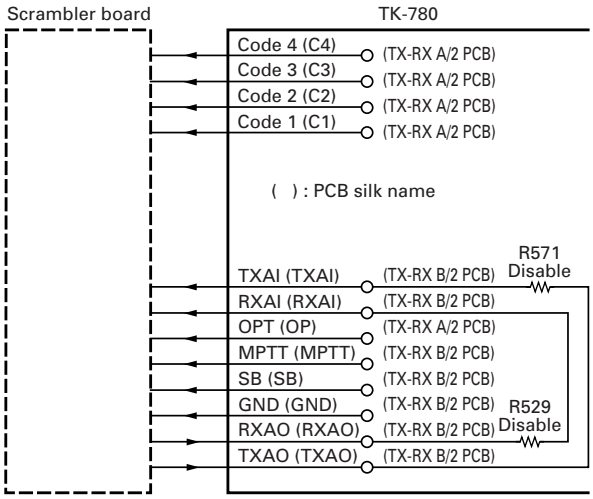

Fig 5

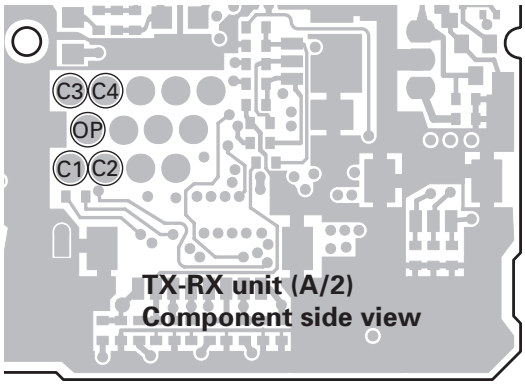

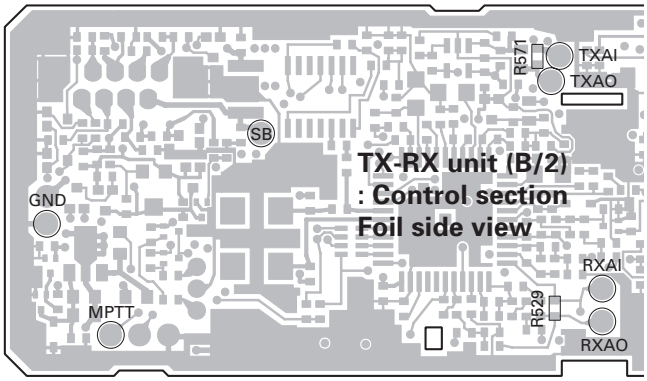

6. PA/HA Unit (KAP-1 : Option)

6-1. Installing the KAP-1 in the Transceiver

The Horn Alert (max. 2A drive) and Public Address functions are enabled by inserting the KAP-1 W1 (3P; white/black/red) into CN3 on the TX-RX unit (A/2), inserting W2 (3P; green) into CN5 on the TX-RX unit (A/2), and connecting the KCT-19 (option) to CN2 and CN3 of the KAP-1.

- **Installation procedure**

1. Open the upper case of the transceiver.
2. Insert the two cables (❶) with connectors from the KAP-1 switch unit into the connectors on the transceiver.
3. Secure the switch unit board to the chassis with a screw (❸). The notch (❷) in the board must be placed at the front left side.
4. Attach the cushion on the top of the KAP-1 switch unit.

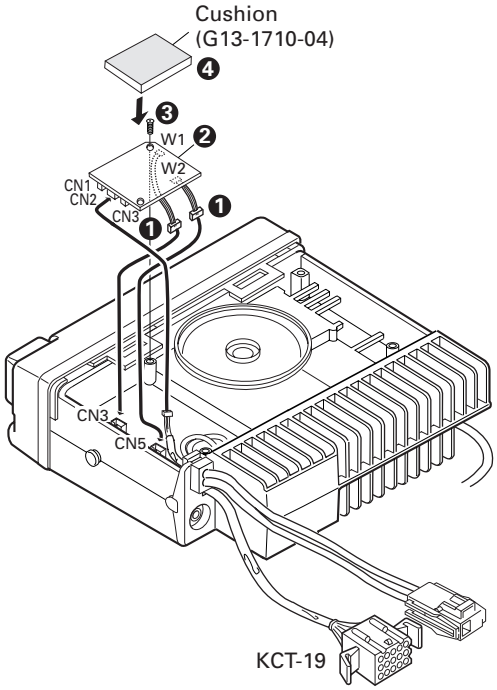

Fig. 6

6-2. Modifying the Transceiver

- **Horn alert**

The signal from pin 4 of IC7 on the TX-RX unit (A/2) turns Q4 and Q6 on and off and drives KAP-1 HA relay to drive the horn with a maximum of 2A.

The default output is HR1. The relay open output can be obtained between HR1 and HR2 by removing R1 in the KAP-1.

	R1	Output form
HR1 (Default)	Enable	HR1
HR2	Disable	HR1 HR2

INSTALLATION

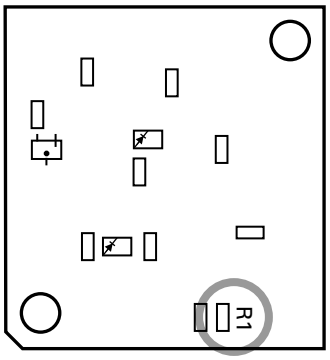

Fig. 7 KAP-1 foil side view

- **Public address**

The signal from pin 13 of IC7 on the TX-RX unit (A/2) drives PA relay in the KAP-1 and switches the audio power amplifier output between the external PA system (through KCT-19) and internal and external speakers.

To use the PA function, R109 on the TX-RX unit (A/2) must be removed.

	R109
Use the PA function	No
Do not use the PA function	Yes

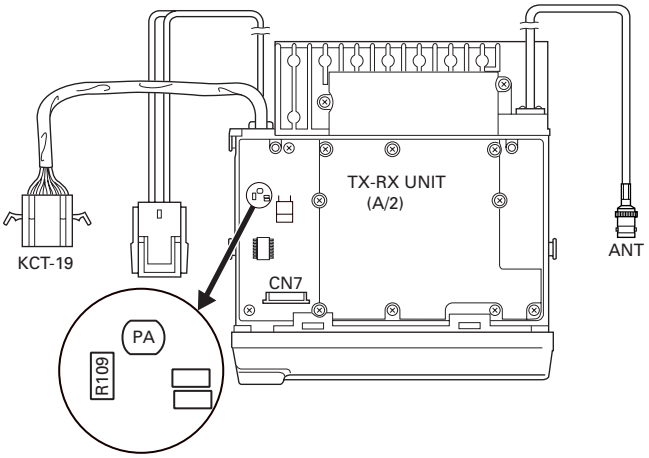

Fig. 8

7. Fitting the Control Panel Upside Down

The TK-780 control panel can be fitted upside down, so the transceiver can be mounted with its internal speaker (in the upper half of the case) facing down in your car.

1. Remove the control panel and the TX-RX unit (B/2) control section. (Fig. 9)

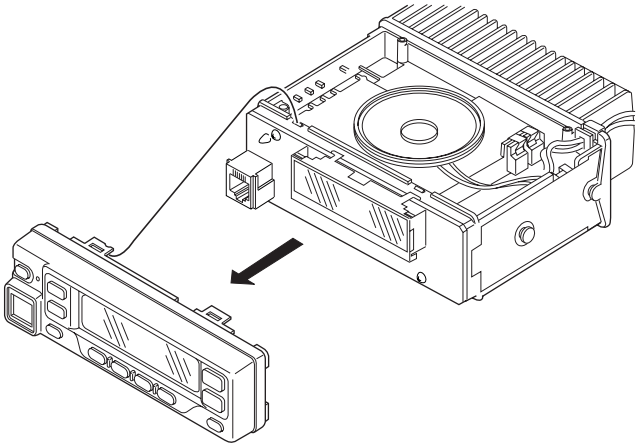

Fig. 9

2. Fold the flat cable (❶) in the opposite direction (❷).
3. Rotate the control section (❸) 180 degrees (❹).
4. Insert the flat cable into the control section connector, CN502 (❺).
5. Mount the control section on the transceiver (❻).

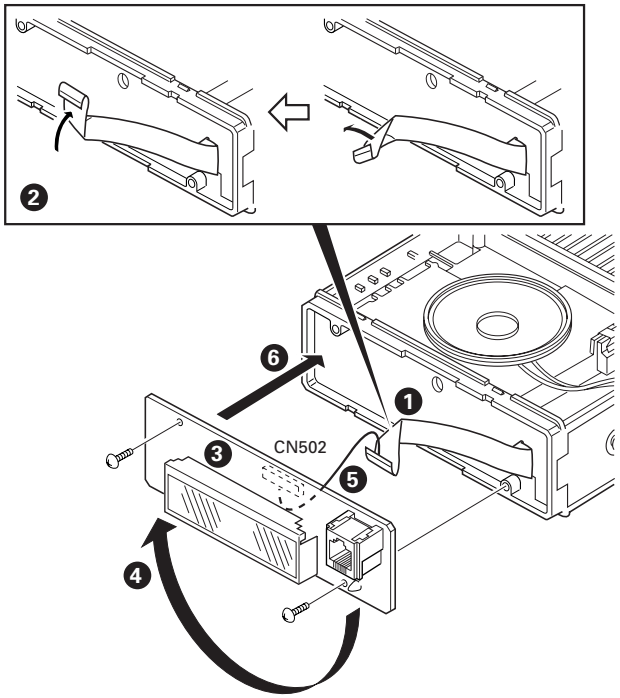

Fig. 10

INSTALLATION

6. Rotate the control panel 180 degrees and mount it on the transceiver. Refit the two halves of the case to complete installation. (Fig. 11)

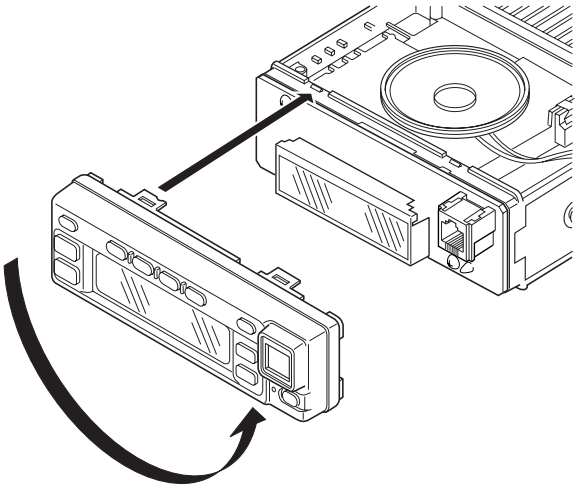

Fig. 11

8. External Speaker

8-1. KES-3 : Option

The KES-3 is an external speaker for the 3.5-mm-diameter speaker jack.

- **Connection procedure**

1. Connect the KES-3 to the 3.5-mm-diameter speaker jack on the rear of the transceiver.

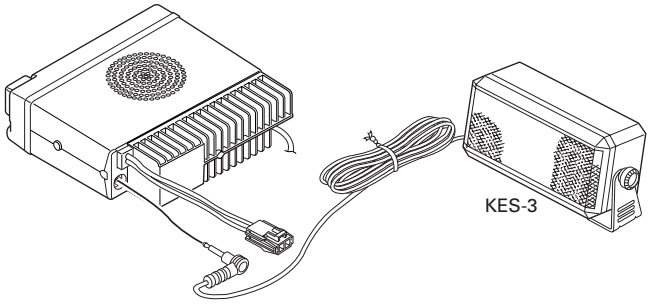

Fig. 12

8-2. KES-4 : Option

The KES-4 is an external speaker used with the accessory connection cable.

- **Connection procedure**

1. Install the KCT-19 in the transceiver. (See the KCT-19 section.)
2. Insert the crimp terminal into the square plug supplied with the KCT-19.
3. Connect CN5 of the transceiver to connector C of the KCT-19 instead of to the internal speaker connector.

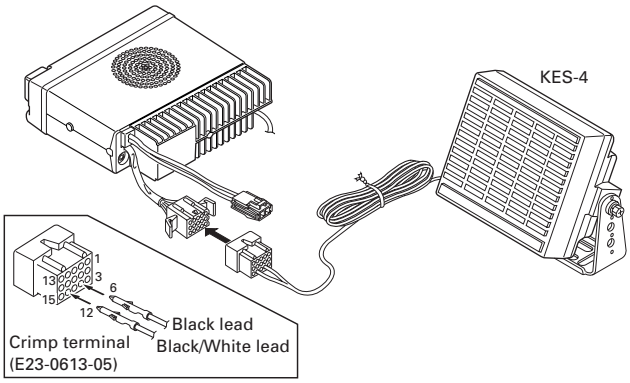

Fig. 13

CIRCUIT DESCRIPTION

Frequency Configuration

The TX-RX unit (A/2) incorporates a VCO, based on a fractional N type PLL synthesizer system, that allows a channel step of 5, 6, and 25kHz to be selected. The incoming signal from the antenna is mixed with a first local oscillation frequency to produce a first intermediate frequency of 44.85MHz.

The signal is then mixed with a second local oscillation frequency of 44.395MHz to produce a second intermediate frequency of 455kHz. This is called a double-conversion system. The TX-RX unit (A/2) contains a wide/narrow MCF and CFs. The transmit signal is produced by the PLL circuit for direction oscillation and division. The signal output from the VCO is amplified by a straight amplifier and transmitted.

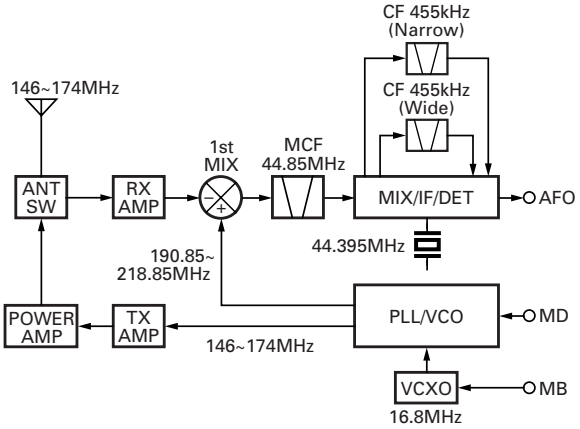

Fig. 1 Frequency configuration

Receiver System

■ Outline

The incoming signal from the antenna passes through a low-pass filter and a transmission/reception selection diode switch (D211) and goes to the front end of the receiver. The front-end filter is a variable BPF consisting of three coils and three varicap diodes (D206, D207, D208) to eliminate unwanted out-of-band signal components. The low-noise amplifier (LNA) (Q202) uses a bipolar transistor to achieve wide-band and low-distortion amplification.

The signal passes through the BPF and is down-converted with the first local signal by IC202 to produce the first IF signal of 44.85 MHz. The first local signal passes through an LPF and an attenuator to eliminate unwanted harmonics components and implement the optimum input level to the mixer, then enters IC202. A DBM is used as a mixer to achieve a high potential.

The signal output from the mixer passes through two MCFs (XF1). The signal is amplified by an intermediate frequency amplifier and input to the FM IF IC (IC11).

The first intermediate frequency signal is mixed with the second local signal of 44.395MHz to produce the second IF signal of 455kHz.

The unwanted near-by signal components are then eliminated by a wide ceramic filter (CF1) or a narrow ceramic filter (CF2) and the resulting signal goes back to the FM IF IC. The signal is quadrature-detected in the IC to produce an audio signal, which is amplified by a DET amplifier (IC2) and output to the TX-RX unit (B/2).

■ Wide/Narrow Changeover Circuit

The W/N port (pin 11) of the shift register (IC7) is used to switch between ceramic filters. When the W/N port is high, Q24 turns on and the ceramic filter SW diode (D22, D23) CF1 turns on to receive a Wide signal. At the same time, Q16 turns on and one of the filters is selected so that the wide and narrow audio output levels are equal.

When the W/N port is low, Q23 turns on and the ceramic filter SW diode (D22, D23) CF2 turns on to receive a Narrow signal.

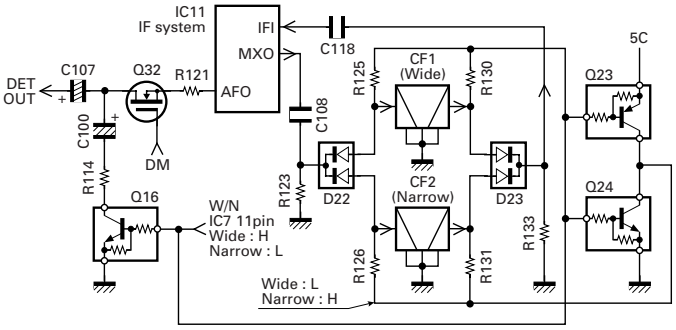

Fig. 3 Wide/Narrow changeover circuit

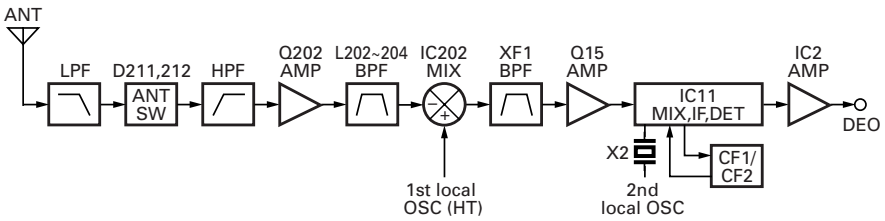

Fig. 2 Receiver system

CIRCUIT DESCRIPTION

■ AF Signal System

The detection signal (DEO) from the TX-RX unit (A/2) goes to the audio processor (IC504) of the TX-RX unit (B/2). The signal passes through a filter in the audio processor to adjust the gain, and is output to IC502. IC502 sums the AF signal and the DTMF signal and returns the resulting signal to the TX-RX unit (A/2). The signal (AFO) sent to the TX-RX unit (A/2) is input to the D/A converter (IC5). The AFO output level is adjusted by the D/A converter. The signal output from the D/A converter is added with the BEEP signal (BPO) and the resulting signal is input to the audio power amplifier (IC10). The AF signal from IC10 switches between the internal speaker and speaker jack (J1) output.

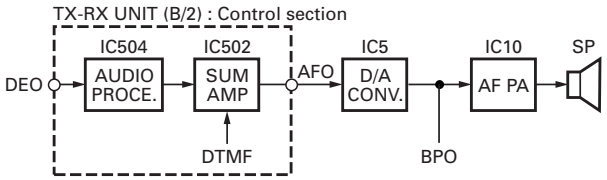

FIg. 4 AF signal system

■ Squelch Circuit

The detection output from the FM IF IC (IC11) is amplified by IC2 and the signal (DEO) is sent to the TX-RX unit (B/2). The signal passes through a high-pass filter and a noise amplifier (Q503) in the TX-RX unit (B/2) to detect noise. A voltage is applied to the CPU (IC511). The CPU controls squelch according to the voltage (ASQ) level. The signal from the RSSI pin of IC11 is monitored. The electric field strength of the receive signal can be known before the ASQ voltage is input to the CPU, and the scan stop speed is improved.

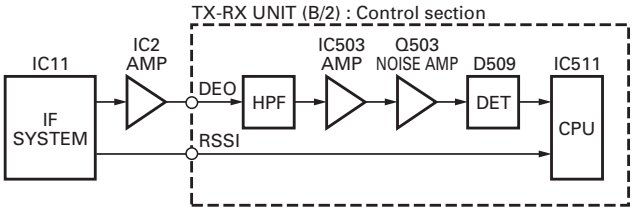

Fig. 5 Squelch circuit

Transmitter System

■ Outline

The transmitter circuit produces and amplifies the desired frequency directly. It FM-modulates the carrier signal by means of a varicap diode.

■ VCO/PLL Circuit

The TK-780 has a VCO for the transmitter and a VCO for the receiver in a sub-unit (A1). They are housed in a solid shielded case and connected to the TX-RX unit (A/2) through CN101. One of the VCOs is selected with an ST signal. A filtered low-noise power supply is used for the VCOs and varicap diodes.

The VCO for the transmitter is described below. It is designed so that Q103 turns on with a prescribed frequency when a reverse bias is applied to D102 and D107 by using the control voltage (CV) through CN101. The control voltage is changed by turning the trimmer capacitor (IC102). The output from Q103 is applied to the buffer amplifier (Q106) to generate a VCO output signal. This signal is used as a drive input signal or a local signal of the first mixer. Since a signal output from Q160 is input to the PLL IC, it passes through CN101 and buffer amplifier (Q300) and goes to the PLL IC (IC300). The modulation signal from CN101 is applied to D109 and passes through C125 and C126 to modulate the carrier.

The PLL IC uses a fractional N type synthesizer to improve the C/N ratio and lock-up speed. The VCO output signal input to the pin 5 of the PLL IC is divided to produce a comparison frequency according to a channel step. This signal is compared with the reference frequency which is output from the VCXO (X1). VCXO provides 16.8MHz, 2.5ppm (–30 to +60°C) and guarantees stable performance when the temperature changes. The output signal from the phase comparator passes through a charge pump and an external active LPF (Q301, Q302) in the PLL IC to generate a DC VCO control voltage CV. Serial data (DT, CK, EP) are output from the CPU (IC511) and shift register (IC8) in the TX-RX unit (B/2) to control the PLL IC. The PLL lock status is always monitored by the CPU.

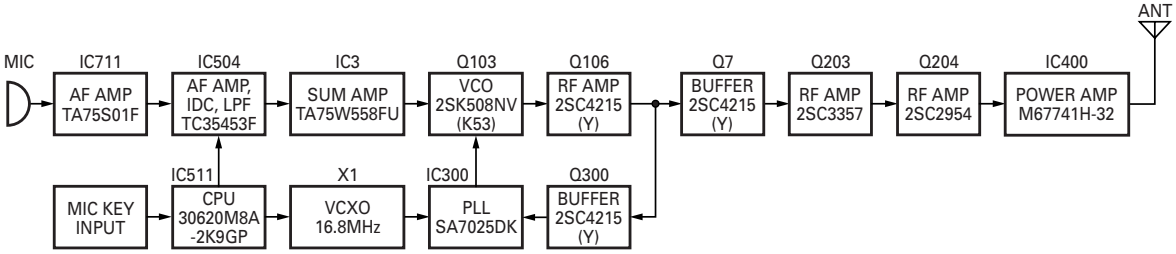

Fig. 6 Transmitter system

CIRCUIT DESCRIPTION

■ Unlock Circuit

During reception, the TR signal goes high, the KEY signal goes low, and Q10 turns on. Q11 turns on and a voltage is applied to the collector (8R). During transmission, the TR signal goes low, the KEY signal goes high and Q13 turns on. Q12 turns on and a voltage is applied to 8T.

The CPU in the TX-RX unit (B/2) monitors the PLL (IC300) LD signal directly. When the PLL is unlocked during transmission, the PLL LD signal goes low. The CPU detects this signal and makes the KEY signal low. When the KEY signal goes low, no voltage is applied to 8T, and no signal is transmitted.

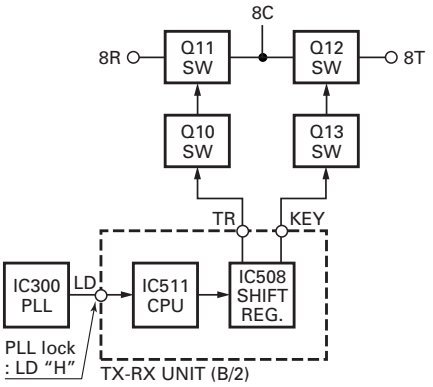

Fig. 7 Unlock circuit

■ Power Amplifier Circuit

The transmit output signal from the VCO is amplified to a specified level of the power module (IC400) by the drive block (Q203, Q204). The amplified signal passes through the transmission/reception selection diode (D211) and goes to a low-pass filter. The low-pass filter removes unwanted high-frequency harmonic components, and the resulting signal is goes the antenna terminal.

■ APC Circuit

The automatic transmission power control (APC) circuit detects part of a power module output with a diode (D27, D30) and applies a voltage to Q21. Q21 compares the APC control voltage (PC) generated by the D/A converter (IC5) and DC amplifier (IC6) with the detection output voltage to control Q19 and Q20, generates DB voltage from B voltage, and stabilizes transmission output.

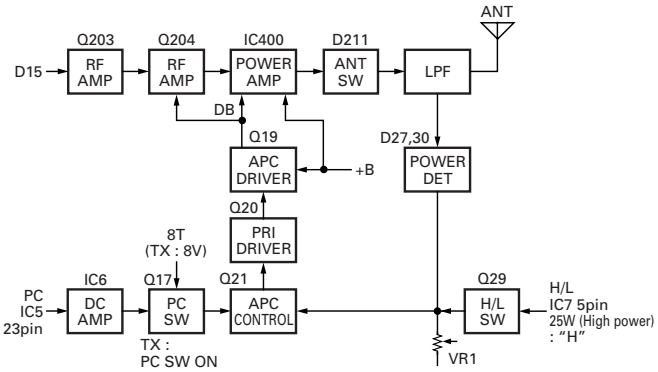

Fig. 8 APC circuit

Q17 turns the PC signal on or off using 8T so that the circuit works only during transmission. With stability at low power in mind, Q29 turns off to optimize the detection voltage.

The APC circuit is configured to protect overcurrent of the power module due to fluctuations of the load at the antenna end and to stabilize transmission output at voltage and temperature variations.

Control Circuit

The CPU carries out the following tasks:

1) Controls the shift register (IC7, IC8, IC508) AF MUTE, WIDE/NARROW, T/R KEY outputs.
2) Adjusts the AF signal level of the audio processor (IC504) and turns the filter select compounder on or off.
3) Controls the DTMF decoder (IC507).
4) Controls the LCD assembly display data.
5) Controls the PLL (IC300).
6) Controls the D/A converter (IC5) and adjusts the volume, modulation and transmission power.

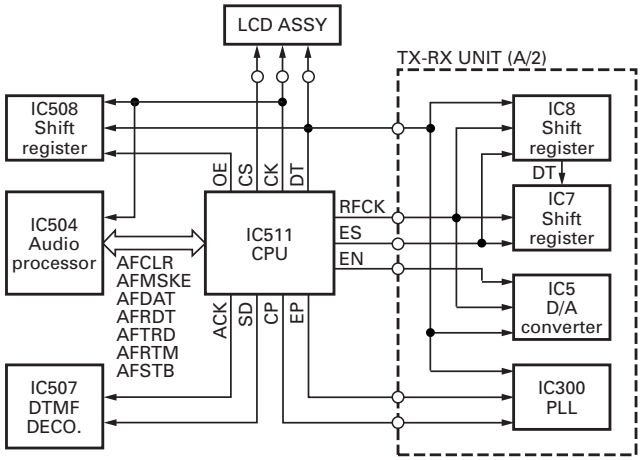

Fig. 9 Control circuit

■ Memory Circuit

The transceiver has a 2M-bit (256k x 8) flash ROM (IC510) and an 16k-bit EEPROM (IC512). The flash ROM contains firmware programs, data and user data which is programmed with the FPU. The EEPROM contains adjustment data. The CPU (IC511) controls the flash ROM through an external address bus and an external data bus. The CPU controls the EEPROM through two serial data lines.

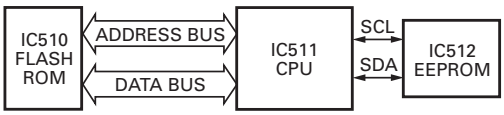

Fig. 10 Memory circuit

CIRCUIT DESCRIPTION

■ Display Circuit

The CPU (IC511) controls the shift register (IC508) and display LEDs. When the LG line goes high when the transceiver is busy, Q508 turns on and the green LED on D511 lights. In transmit mode, the LR line goes high, Q509 turns on and the red light lights. Backlighting LEDs for the key operation unit (D512~D517) and LCD are provided.

When the KBLC line goes high, Q512 turns on, then Q513 turns on, and the key illumination LED lights. A voltage is applied to the LEDA line to turn on the LCD backlight.

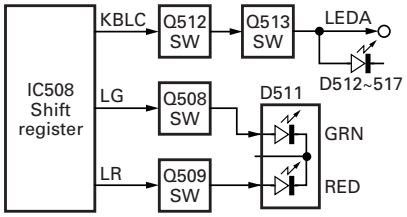

Fig. 11 Display circuit

■ Key Matrix Circuit

The TK-780 front panel has ten keys. Each of them is connected to a cross point of a matrix of the KEY1 to KEY7 ports of the microprocessor. The KEY5 to KEY7 ports are always high, while the KEY1 to KEY4 ports are always low.

The microprocessor monitors the status of the KEY1 to KEY7 ports. If the state of one of the ports changes, the microprocessor assumes that the key at the matrix point corresponding to that port has been pressed. Unused points (KEY1 to KEY7) are also used for foot switch (FSW) input.

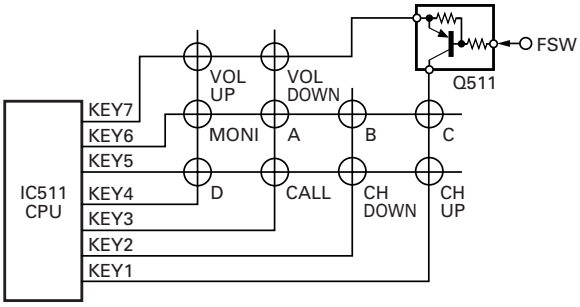

Fig. 12 Key matrix circuit

■ Encode

The QT, DQT signals are output from LSDO of the CPU (IC511) and go to the D/A converter (IC5) of the TX-RX unit (A/2). The DTMF and single/5-tone signals are output from HSDO of the CPU and goes to the audio processor (IC504). An MSK signal is output from the audio processor according to the data (AFDAT) from the CPU. The signal is summed with a MIC/MSK signal by the audio processor (IC504), and the resulting signal passes through an analog switch (IC506) and goes to the TX-RX unit (A/2) (MO).

MO is summed with the external pin DI line by the summing amplifier (IC3) and the resulting signal goes to the D/A converter (IC5). The D/A converter (IC5) adjusts the MO level and the balance between the MO and TO levels. Part of a TO signal is summed with an output signal from pin 3 (MO) of IC5 and the resulting signal goes to the MD pin of the VCO. This signal is applied to a varicap diode in the VCO for direct FM modulation.

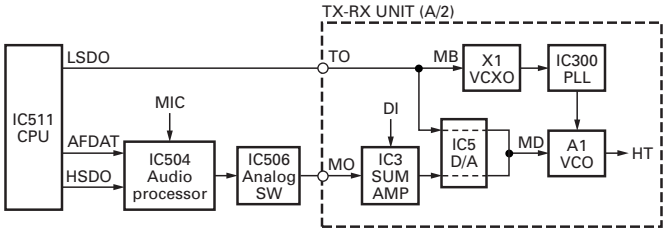

Fig. 13 Encode

■ Decode

The signal (DEO) detected by the TX-RX unit (A/2) passes through two low-pass filters of IC501, goes to LSDI of the CPU (IC511) to decode QT, DQT. The DTMF signal is decoded by a dedicated IC (IC507) and the resulting signal is sent to the CPU (IC511) as serial data (STD).

The 5-tone signal passes through high-pass filter, IC504 and then through low-pass filter, IC710. After passing through these filters, only the audio signal between 300Hz and 3kHz is extracted and input to comparator, IC502. The comparator converts the input signal into a square waveform (0 and 5V). This square waveform is then fed to the HSDI line of CPU (IC511).

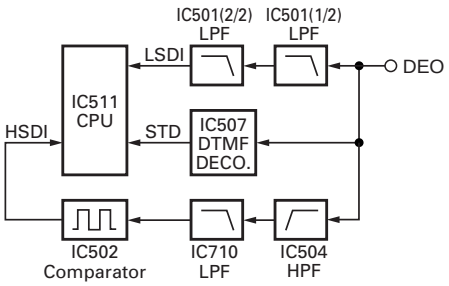

Fig. 14 Decode

■ D/A Converter

The D/A converter (IC5) is used to adjust TONE and MO modulation, beep, AF volume, TV voltage, FC reference voltage, and PC POWER CONTROL voltage level.

Adjustment values are sent from the CPU as serial data. The D/A converter has a resolution of 256 and the following relationship is valid:

D/A output = (Vin – VDAref) / 256 x n + VDAref

Vin: Analog input

VDAref: D/A reference voltage

n: Serial data value from the microprocessor (CPU)

CIRCUIT DESCRIPTION

■ Horn Control

The horn switch, consisting of Q4, Q5, and Q6, controls the horn relay. It is supplied by the dealer to provide the external horn alert function.

Q5 disables horn alert, turning on when its base is high, to inhibit the function. Normally, the output from IC7 is low, and Q6 is off; the base of Q4 is about 0V and Q4 is off. When horn alert is enabled, the output from IC7 goes high and Q6 turns on. The base current flows through R58 to Q4 to turn Q4 on. Q4 can sink a maximum of 100mA. If the operational KAP-1 is used, it can drive up to 2A.

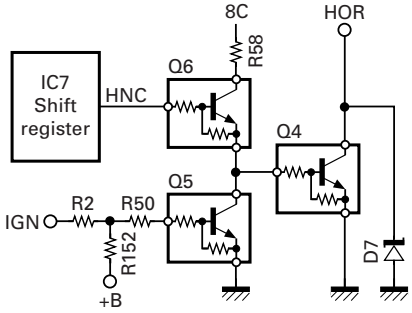

Fig. 15 Horn control

■ PA Switch

If the optional KAP-1 is used, the PA (Public Address) function becomes available. In this case, the signal flow changes as follows;

"PA2"	Q507	SW.A	SW.B	SW.D	Public address
L	L	L	H	H	OFF
H	H	H	L	L	ON

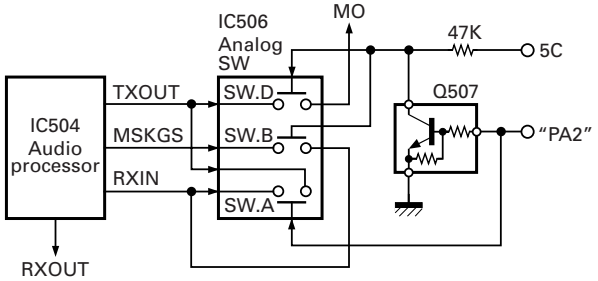

Fig. 16 PA switch

Power Supply Circuit

When the POWER switch on the control unit is pressed, the PSW signal goes low. This signal is inverted by Q26 and sent to a flip-flop IC (IC15). This IC outputs a control signal when the PSW goes low. When the power turns on, pin 1 of IC15 outputs a low signal and Q30 turns on. The base of Q28 goes high, Q28 turns on, SB SW (Q27) turns on and power (SB) is supplied to the set.

This circuit has an over-voltage protection circuit. If a DC voltage of 20V or higher is applied to the power cable, D34 turns on and a voltage is applied to the base of Q31. This voltage turns Q31 on and turns Q28 and SBSW off. This circuit has a TIMED POWER OFF (TOF) function which can be programmed by software.

It is controlled through pin 6 of IC7. When the TOF line goes high, Q22 turns on and then Q25 turns on. Pin 6 of IC15 goes high, then pin 1 goes high to turn Q27 off.

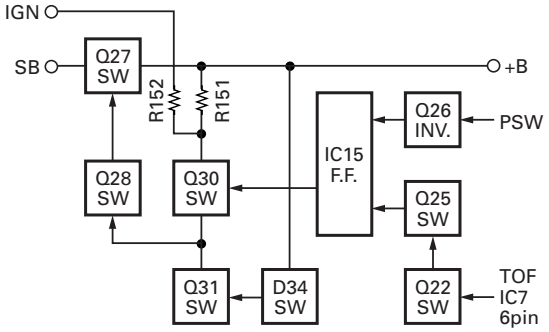

Fig. 17 Power supply circuit

SEMICONDUCTOR DATA

Microprocessor : 30620M8A-2K9GP (TX-RX Unit B/2 : Control Section IC511)

■ Terminal function

Pin No.	Name	I/O	Function
1	LSDOUT	O	Low speed data output.
2	HSDOUT	O	High speed data output.
3	HSDIN	I	High speed data input.
4	DTMSTD	I	DTMF decode IC data detect input.
5	SELF	I	Self programming mode input.
6	BYTE	I	+5V.
7	CNVSS	I	GND.
8	SFTOE	O	Shift register output enable.
9	LCDCS	O	LCD driver chip select output.
10	RESET	I	Microcomputer reset input.
11	XOUT	–	9.8304MHz (System clock).
12	VSS	–	GND.
13	XIN	–	9.8304MHz (System clock).
14	VCC	–	+5V.
15	IGN	I	Ignition input.
16	AFTRD	I	FFSK modulation data output timing pulse input.
17	AFRTM	I	FFSK demodulation data input timing pulse input.
18	MICDAT	O	MIC key data output.
19	CP	O	PLL IC clock output.
20	BEEP	O	Beep data output.
21	AFRDT	I	FFSK demodulation data input.
22	AFREG1	O	AF IC register switching data output 1.
23	AFREG2	O	AF IC register switching data output 2.
24	EEPDAT	O	EEPROM data output.
25	EN	O	D/A converter IC data strobe output.
26	AFCLR	O	FFSK flame reset output.
27	RXCOM2	I	External hook input / External serial interface input.
28	TXCOM2	I/O	External PTT input / External serial interface output.
29	TXCOM1	O	External serial interface output.
30	RXCOM1	I	External serial interface input.
31	LD	I	PLL unlock detect input.
32	AFMSKE	O	FFSK modulation enable. (Enable active "H")
33	TXD	O	Serial interface output.
34	HOOK	I	Hook input / Serial interface input.
35	AFDAT	O	FFSK data output.
36	RFCLK	O	Common clock output. (TX-RX unit A/2)
37	RDY	–	Not used.
38	ALE	–	Not used.
39	HOLD	–	Not used.
40	HLDA	–	Not used.
41	BLCK	–	Not used.
42	RD	–	Flash memory RD bus.
43	BHE	–	Not used.
44	WR	–	Flash memory WR bus.
45	DTMCLK	O	DTMF decode IC clock output.
46	CNTCLK	O	Common clock output. (TX-RX unit B/2)

Pin No.	Name	I/O	Function
47	EP	O	PLL IC data strobe output.
48	CSO	O	Flash memory chip enable.
49	A19	–	Not used.
50~59	A18~A9	–	Flash memory address bus.
60	VCC	–	+5V.
61	A8	–	Flash memory address bus.
62	VSS	–	GND.
63~70	A7~A0	–	Flash memory address bus.
71~74	KEY1~KEY4	I/O	Key matrix data input/output 1~4.
75	MINDAT	O	Common data output.
76~78	KEY5~KEY7	I	Key matrix data input 5~7.
79~86	D7~D0	–	Flash memory data bus.
87	DTMDAT	I	DTMF decode IC data input.
88	AUXDTC	I	External DTC input.
89	MICBLC	O	MIC back light control output.
90	POWSW	I	Power switch input.
91	ANLSQL	I	Squelch level input.
92	PTT	I	PTT switch input.
93	RSSI	I	Received signal strength indicator input.
94	AVSS	–	GND.
95	LSDIN	I	Low speed data input.
96	VREF	–	+5V.
97	AVCC	–	+5V.
98	ES1	O	Shift register data strobe output. (Control unit)
99	ES2	O	Shift register data strobe output. (TX-RX unit)
100	AFSTB	O	AF IC data strobe output.

Shift Register : BU4094BCFV

■ Terminal function (TX-RX unit B/2 IC508)

Pin No.	Port	Name	Function
1	ES	ES1	Strobe
2	DT	DAT	Data
3	CK		Clock
4	Q1	LEDR	Red LED. H : ON, L : OFF
5	Q2	LEDG	Green LED. H : ON, L : OFF
6	Q3	KEYBLT	Key back light. H : ON, L : OFF
7	Q4	MMUTE	MIC mute. H: Mute, L : Unmute
8	VSS		GND
9			NC
10			NC
11	Q8	PA2	Public address control 2. H : ON, L : OFF
12	Q7	BSHIFT	Beat shift. H : ON, L : OFF
13	Q6	KEY	TX power switching. H : TX, L : RX
14	Q5	T/R	TX/RX switching. H : RX, L : TX
15	OE		Output enable
16	VDC		+5V

SEMOCONDUCTOR DATA / DESCRIPTION OF COMPONENTS

■ Terminal function (TX-RX unit A/2 IC8)

Pin No.	Port	Name	Function
1	STB	ES	Strobe
2	SI	DT	DATA
3	CLK	CK	Clock
4	Q1	AM1	Audio mute 1. H : Mute, L : Unmute
5	Q2	LOK	Link complete. (Programmable active H/L)
6	Q3	STR	VCO shift switching. H : TX, L : RX
7	Q4	DM	Dead mute. H : RX, L : TX
8	VSS		GND
9	QS		IC7 data output
10			NC
11	Q8	SQ	External squelch. (Programmable active H/L)
12	Q7	CODE2	Option board data 2. H : ON, L : OFF
13	Q6	CODE1	Option board data 1. H : ON, L : OFF
14	Q5	OPT	Option board control. H : ON, L : OFF / Auxiliary B. (Programmable active H/L)
15	OE		Output
16	VDC		+5V.

■ Terminal function (TX-RX unit A/2 IC7)

Pin No.	Port	Name	Function
1	STB	ES	Strobe
2	SI	DT	Data
3	CLK	CK	Clock
4	Q1	HORN	Horn alert. H : ON, L : OFF / Auxiliary A. H : ON, L : OFF
5	Q2	HL	RF power switching. H : High, L : Low
6	Q3	TIMOFF	Timed power off. H : Power off
7	Q4	CODE3	Option board data 1. H : ON, L : OFF
8	VSS		GND
9			NC
10			NC
11	Q8	W/N	Wide/Narrow switching. H : Wide, L : Narrow
12	Q7		NC
13	Q6	PA1	Public address 1. H : ON, L : OFF
14	Q5	CODE4	Option board data 1. H : ON, L : OFF
15	OE		Output enable
16	VDC		+5V

DESCRIPTION OF COMPONENTS

TX-RX Unit (A/2)

Ref. No.	Use / Function	Operation / Condition
IC1	DC amp	FC, TCXO control
IC2	DET amp	External DEO, internal DEO
IC3	Amp/Summing amp	DI / DI and MO addtion
IC4	Analog switch	DI switch
IC5	A/D converter	PC, TV, FC, AFO, BEEP, TO, MO control
IC6	DC amp	PC
IC7	Shift register	HNC, H/L, TOF, CODE3, CODE4, PA, W/N control
IC8	Shift register	AM, LOK, STR, DM, OPT, CODE1, CODE2, SQ control
IC9	5V AVR	External 5C
IC10	AF power amp	
IC11	FM IF DET	Quadrature detector, 2nd mixer, OSC, IF amplifier, RSSI
IC12	5V AVR	5C
IC13	9V AVR	9C
IC14	8V AVR	8C
IC15	Flip-flop	Power on/off control
IC201	DC amp	TV
IC202	Mixer	DBM
IC300	PLL	Reference 16.8MHz. PLL lock : LD “H”
IC400	Power module	RF power 25W
IC401	Short protection	
Q1	DC switch	R17 connection and, PTT “H” time DI off
Q2	Ripple filter	8CL
Q3	Ripple filter	9CL
Q4	HOR switch	IGN
Q5	HOR SW control	IGN
Q6	HOR SW control	HNC “H” time on
Q7	Buffer amp	HT
Q8	AF mute	AM “H” time on
Q9	AF mute	Power off time on
Q10	8R SW control	TR “H” time on
Q11	8R switch	Q10 on time on
Q12	8T switch	Q13 on time on
Q13	8T SW control	KEY “H” time on
Q15	IF amp	44.85MHz
Q16	DET output level switch	Wide time on
Q17	PC switch	TX (8T) time on
Q18	DET mute	KEY “H” time on
Q19	APC	APC driver
Q20	APC	APC pre-driver
Q21	APC control	
Q22	TOF switch	TOF “H” time on
Q23	W/N switch	Wide time off

DESCRIPTION OF COMPONENTS

Ref. No.	Use / Function	Operation / Condition
Q24	W/N switch	Wide time on
Q25	TOF switch	Q22 on time on
Q26	Inverter	Power switch "L" time on
Q27	SB switch	Q28 on time on
Q28	SB SW control	Q30 on and Q31 off time on
Q29	H/L switch	High power time "H"
Q30	SB SW control	Power on time on
Q31	SB SW control	DC 20V and over time on
Q32	DET mute	TX time on
Q202	LNA	
Q203	RF amp	TX drive first
Q204	RF amp	TX drive last
Q300	Buffer amp	PLL
Q301,302	Active filter	
Q401	Short protection	IC400 out short time on
Q402	W/N switch	Wide time off
Q403	W/N switch	Wide time on
D1~6	Protection	
D7	HOR protection	
D8,9	Protection	
D11	OR gate	AF mute
D12~14	Protection	
D15	HT switch	
D16	Reverse protection	
D17	Protection	
D20	Reverse protection	IGN
D21	Protection	5V (IGN)
D22,23	W/N CF change	
D24	Over current protection	
D26	Reverse protection	
D27	Power detection	
D28	Protection	
D30	Power detection	
D31	Reverse protection	
D32	Surge absorption	B
D34	Protection	DC 20V and over time on
D35	Charge	DEO
D37	Reverse protection	
D206~208	BPF tune	
D209,210	Usable temperature range	
D211	ANT swtich	TX time on
D212,213	ANT switch	

TX-RX Unit (B/2) : Control Section

Ref. No.	Use / Function	Operation / Condition
IC501	LPF, amplification	LSD
IC502	Amplification	AF, HSD
IC503	Base voltage/ Buffer amp	ASQ
IC504	Audio processor	Compander, MIC amplifier, ALC, Modem, AF filter, IDC
IC506	Analog switch	MO, DEO, EMG, MI switch
IC507	DTMF decoder	DTMF detection
IC508	Shift register	LR, LG, KBLC, MM1, T/R, KEY, BSFT, PA2 output
IC509	Reset	Power on time "L" output
IC510	Flash ROM	
IC511	CPU	
IC512	EEPROM	
IC513	5V AVR	5C (Control unit)
IC710	Buffer amp	HSD
IC711	Buffer amp	MIC
Q501	MIC mute	MM "H" and MM1 "H" time mute on
Q502	AF mute	KEY "H" time mute on
Q503	Noise amp	
Q507	Inverter	PA2 H/L switch
Q508	LED switch	LG "H" time on, Busy time green on
Q509	LED switch	LR "H" time on, TX time red on
Q510	Clock switch shift	BSFT "H" time clock shift on
Q511	FSW swtich	FSW "L" time foot switch on
Q512	Key backlight switch	KBLC "H" time on
Q513	Key backlight switch	KBLC "H" time key backlight on
Q515	Key backlight switch	
D501	Surge absorption	BLC
D502	Over current protection	PSB
D503	Surge absorption	CM
D504	Surge absorption	PTT/TXD
D505	Surge absorption	HOOK/RXD
D507	OR gate (MIC mute)	MM/MM1
D508	Limiter	MIC
D509	Limiter	ASQ
D510	Reverse current protection	C575 charge
D511	BUSY/TX LED (Green/Red)	Busy time green on, TX time red on
D512~517	Key backlight	KBLC "H" time on
D518	Current regulation	Key backlight
D520	Discharge	Reset pulse

VCO Unit

Ref. No.	Use / Function	Operation / Condition
Q101	Inverter	TX (ST "H") time on
Q102	Oscillator	RX
Q103	Oscillator	TX
Q104	TX/RX switch	TX (ST "H") time on
Q105	TX/RX switch	Q101 off time on
Q106	Buffer amp	
D101	RX VCO	
D102	TX VCO	
D104	RX VCO	
D107	TX VCO	
D109	Modulation	

TK-780

PARTS LIST

✻New Parts. ⚠ indicates safety critical components.
Parts without **Parts No.** are not supplied.
Les articles non mentionnes dans le **Parts No.** ne sont pas fournis.
Teile ohne **Parts No.** werden nicht geliefert.

L: Scandinavia **K**: USA **P**: Canada
Y: PX (Far East, Hawaii) **T**: England **E**: Europe
Y: AAFES (Europe) **X**: Australia **M**: Other Areas

TK-780
TX-RX UNIT (X57-6142-XX)

Ref. No.	Address	New parts	Parts No.	Description		Destination
TK-780						
1	1A		A01-2165-23	CABINET	UPPER	
2	2A		A01-2166-23	CABINET	LOWER	
3	2A		A62-0642-03	PANEL ASSY		
5	1D		B09-0235-05	CAP	ACC	
6	2B		B38-0835-05	LCD ASSY		
9	1D		B42-5999-14	RATING LABEL		
7	2D	✻	B62-1438-10	INSTRUCTION MANUAL		
8	1C	✻	B72-1998-14	MODEL NAME PLATE		E
8	1C	✻	B72-2092-04	MODEL NAME PLATE		E3
11	1C		E30-3340-05	DC CORD	RADIO	
12	1C		E30-3405-05	ANTENNA CABLE	BNC	
10	1D		E30-3438-05	DC CORD	ACC	
13	2B		E37-0789-05	FLAT CABLE	CONT-TX/RX	
14	1B		E37-0790-25	LEAD WIRE WITH CONNECTOR (SP)		
16	2B		F10-2234-04	SHIELDING COVER	APC,AVR	
15	2B		F10-2280-12	SHIELDING COVER		
17	1C		F10-2354-03	SHIELDING PLATE	LOWER PM	
18	2C		F10-2355-04	SHIELDING COVER	UPPER PM	
20	2B		F20-1192-04	INSULATING SHEET	CONT	
21	1D		F52-0006-05	FUSE (BLADE)	10A	
23	1B,1C		G02-0791-04	FLAT SPRING	AF,APC,AVR	
25	2B		G02-0862-14	EARTH SPRING	ANT	
39	2C	✻	G02-0897-05	EARTH SPRING	UPPER PM	E3
26	1B,1C		G10-1221-04	FIBROUS SHEET	SIDE	
27	1B		G10-1222-14	FIBROUS SHEET	UP,DOWN	
28	1A,2A,2B		G10-1223-14	FIBROUS SHEET	SHIELD CASE	
-			G11-4068-04	SHEET	CONT	
29	1C		G13-1468-04	CUSHION	DC CODE	
32	2B		G13-1839-04	CUSHION	SHIELD	E3
30	1B		G13-1873-04	CUSHION	SP	
31	2C		G53-0796-04	PACKING	PHONE JACK	
33	3D		H10-6618-12	POLYSTYRENE FOAMED FIXTURE (F)		
34	2E		H10-6619-12	POLYSTYRENE FOAMED FIXTURE (R)		
35	1E		H12-1391-03	INNER PACKING CASE		
36	1D		H25-0103-04	PROTECTION BAG (125/250/0.07)		
37	2E		H25-0720-04	PROTECTION BAG (200X350)		
38	3E		H52-1569-02	ITEM CARTON CASE		E
38	3E	✻	H52-1931-02	ITEM CARTON CASE		E3
40	1D		J29-0627-23	BRACKET	ACC	
42	2B		K29-9105-02	KEY TOP		
A	1A,2A		N33-2606-45	OVAL HEAD MACHINE SCREW		
B	2C		N67-3008-46	PAN HEAD SEMS SCREW W		
C	1A,2B,1C		N87-2606-46	BRAZIER HEAD TAPTITE SCREW		
D	2B		N87-2612-46	BRAZIER HEAD TAPTITE SCREW		
44	1D		N99-0395-05	SCREW SET		
46	1B		T07-0246-05	SPEAKER		

Ref. No.	Address	New parts	Parts No.	Description			Destination
TX-RX UNIT (X57-6142-XX) -70 : E -71 : E3							
D511			B30-2151-05	LED (RED/GREEN)			
D512-517			B30-2171-05	LED (D)			
C1-15			CK73GB1H102K	CHIP C	1000PF	K	
C16			C92-0507-05	CHIP-TAN	4.7UF	6.3WV	
C17			CK73GB1C104K	CHIP C	0.10UF	K	
C18			C92-0507-05	CHIP-TAN	4.7UF	6.3WV	
C19			CC73GCH1H100D	CHIP C	10PF	D	
C20			CK73GB1E103K	CHIP C	0.010UF	K	
C21,22			CK73GB1H102K	CHIP C	1000PF	K	
C23			C92-0507-05	CHIP-TAN	4.7UF	6.3WV	
C24			CK73GB1H102K	CHIP C	1000PF	K	
C25			C92-0507-05	CHIP-TAN	4.7UF	6.3WV	
C27			CK73GB1H102K	CHIP C	1000PF	K	
C28			CC73GCH1H470J	CHIP C	47PF	J	
C29			C92-0628-05	CHIP-TAN	10UF	10WV	
C30			CK73GB1H102K	CHIP C	1000PF	K	
C31			C92-0628-05	CHIP-TAN	10UF	10WV	
C32			CC73GCH1H220J	CHIP C	22PF	J	
C33			CK73GB1E103K	CHIP C	0.010UF	K	
C34			C92-0505-05	CHIP-TAN	10UF	16WV	
C35			CK73GB1E103K	CHIP C	0.010UF	K	E
C36			C92-0628-05	CHIP-TAN	10UF	10WV	
C37			C92-1341-05	ELECTRO	100UF	16WV	
C38			C92-0505-05	CHIP-TAN	10UF	16WV	E
C39			CK73GB1E103K	CHIP C	0.010UF	K	
C40			CK73GB1H102K	CHIP C	1000PF	K	
C41			C92-1341-05	ELECTRO	100UF	16WV	E
C42			C92-0546-05	CHIP-TAN	68UF	6.3WV	
C43			CK73GB1E103K	CHIP C	0.010UF	K	
C44			CK73GB1H102K	CHIP C	1000PF	K	
C45			C92-0507-05	CHIP-TAN	4.7UF	6.3WV	
C46			C92-0004-05	CHIP-TAN	1.0UF	16WV	
C47			CK73GB1H102K	CHIP C	1000PF	K	
C48			CK73FF1C105Z	CHIP C	1.0UF	Z	
C49			CK73GB1H102K	CHIP C	1000PF	K	
C51,52			CK73GB1H102K	CHIP C	1000PF	K	
C54			CK73GB1C104K	CHIP C	0.10UF	K	
C55			CC73GCH1H180J	CHIP C	18PF	J	
C56			CK73GB1H102K	CHIP C	1000PF	K	
C57			CK73GB1E103K	CHIP C	0.010UF	K	
C58-60			CK73GB1H102K	CHIP C	1000PF	K	
C61			CK73GB1E103K	CHIP C	0.010UF	K	
C62			CC73GCH1H180J	CHIP C	18PF	J	
C63			CK73FB1H103K	CHIP C	0.010UF	K	E3
C63			CK73FF1C105Z	CHIP C	1.0UF	Z	E
C64			CK73GB1E103K	CHIP C	0.010UF	K	
C65			CK73GB1C104K	CHIP C	0.10UF	K	
C66			CK73GB1H102K	CHIP C	1000PF	K	
C68			CK73GB1C104K	CHIP C	0.10UF	K	
C69			CC73GCH1H151J	CHIP C	150PF	J	
C70			C92-0719-05	ELECTRO	47UF	25WV	
C71			CK73GB1C104K	CHIP C	0.10UF	K	
C72,73			CK73GB1H102K	CHIP C	1000PF	K	

PARTS LIST

TX-RX UNIT (X57-6142-XX)

Ref. No.	Address	New parts	Parts No.	Description			Desti-nation
C74			C92-0719-05	ELECTRO	47UF	25WV	
C75			C92-0044-05	CHIP-ELE	47UF	10WV	
C76			CK73GB1H102K	CHIP C	1000PF	K	
C77			C92-0719-05	ELECTRO	47UF	25WV	
C78			CK73GB1E103K	CHIP C	0.010UF	K	
C79			C92-0722-05	ELECTRO	470UF	25WV	
C80			CK73GB1C104K	CHIP C	0.10UF	K	
C84			CC73GCH1H080D	CHIP C	8.0PF	D	
C87			CK73GB1H471K	CHIP C	470PF	K	
C88			CK73GB1E103K	CHIP C	0.010UF	K	
C89			CK73GB1H471K	CHIP C	470PF	K	
C90			CK73GB1H102K	CHIP C	1000PF	K	
C91,92			CK73GB1E103K	CHIP C	0.010UF	K	
C93			CK73GB1H102K	CHIP C	1000PF	K	
C94			CK73GB1H471K	CHIP C	470PF	K	
C95			CC73GCH1H150J	CHIP C	15PF	J	
C96			CC73GCH1H180J	CHIP C	18PF	J	
C97			CK73GB1H102K	CHIP C	1000PF	K	
C98			CC73GCH1H150J	CHIP C	15PF	J	
C99			CK73GB1H102K	CHIP C	1000PF	K	
C100			C92-0628-05	CHIP-TAN	10UF	10WV	
C101			CK73GB1H102K	CHIP C	1000PF	K	
C102			CC73GCH1H270J	CHIP C	27PF	J	
C103			CK73GB1C104K	CHIP C	0.10UF	K	
C104			CK73GB1E103K	CHIP C	0.010UF	K	
C105,106			C92-0516-05	CHIP-TAN	4.7UF	16WV	
C107			C92-0628-05	CHIP-TAN	10UF	10WV	
C108			CK73GB1C104K	CHIP C	0.10UF	K	
C109			CK73GB1H471K	CHIP C	470PF	K	
C111,112			CK73GB1H471K	CHIP C	470PF	K	
C113			CK73GB1E103K	CHIP C	0.010UF	K	
C114			C92-0543-05	CHIP-TAN	3.3UF	10WV	
C115			CC73GCH1H270J	CHIP C	27PF	J	
C116			C92-0712-05	CHIP-TAN	22UF	6.3WV	
C117			CK73GB1E103K	CHIP C	0.010UF	K	
C118			CK73GB1C104K	CHIP C	0.10UF	K	
C119			C92-0543-05	CHIP-TAN	3.3UF	10WV	
C120			CK73GB1H102K	CHIP C	1000PF	K	
C121			C92-0628-05	CHIP-TAN	10UF	10WV	
C123			CK73GB1C104K	CHIP C	0.10UF	K	
C124			CK73GB1E103K	CHIP C	0.010UF	K	
C125			CK73GB1H471K	CHIP C	470PF	K	
C126			CK73GB1C104K	CHIP C	0.10UF	K	
C127			CK73GB1E103K	CHIP C	0.010UF	K	
C128			CK73GB1H471K	CHIP C	470PF	K	
C129			CK73GB1E103K	CHIP C	0.010UF	K	
C130			CK73GB1H102K	CHIP C	1000PF	K	
C131			CK73GB1H471K	CHIP C	470PF	K	
C132			CK73GB1C104K	CHIP C	0.10UF	K	
C133			C92-0720-05	ELECTRO	100UF	25WV	
C134			CK73FB1E224K	CHIP C	0.22UF	K	
C135			CK73GB1H102K	CHIP C	1000PF	K	
C136			CK73FB1E224K	CHIP C	0.22UF	K	
C137			CK73GB1H471K	CHIP C	470PF	K	
C138			CC73FCH1H0R5B	CHIP C	0.5PF	B	
C139			CC73FCH1H020B	CHIP C	2.0PF	B	E3
C139			CC73FCH1H030B	CHIP C	3.0PF	B	E
C140-143			CK73GB1H471K	CHIP C	470PF	K	
C144			CK73GB1H102K	CHIP C	1000PF	K	
C145,146			CK73GB1H471K	CHIP C	470PF	K	

Ref. No.	Address	New parts	Parts No.	Description			Desti-nation
C147			CC73FCH1H0R5B	CHIP C	0.5PF	B	
C148			CK73GB1H102K	CHIP C	1000PF	K	
C149			CC73FCH1H020B	CHIP C	2.0PF	B	E
C149			CC73FCH1H1R5B	CHIP C	1.5PF	B	E3
C150			CK73GB1H221K	CHIP C	220PF	K	
C151			CC73GCH1H820J	CHIP C	82PF	J	
C153			CC73GCH1H040C	CHIP C	4.0PF	C	
C154,155			CK73GB1E103K	CHIP C	0.010UF	K	
C156			CK73GB1C104K	CHIP C	0.10UF	K	
C157			CK73GB1E103K	CHIP C	0.010UF	K	
C161			CC73GCH1H101J	CHIP C	100PF	J	
C162			C92-0555-05	CHIP-TAN	0.047UF	35WV	
C163			CC73GCH1H221J	CHIP C	220PF	J	
C167			CC73GCH1H100D	CHIP C	10PF	D	
C168			C92-0585-05	CHIP-TAN	4.7UF	16WV	
C173			C92-0606-05	CHIP-TAN	4.7UF	10WV	
C175			CK73GB1H102K	CHIP C	1000PF	K	
C176,177			CC73GCH1H470J	CHIP C	47PF	J	
C188			CK73GB1H102K	CHIP C	1000PF	K	
C196-198			CK73GB1H102K	CHIP C	1000PF	K	
C201			CK73GB1H102K	CHIP C	1000PF	K	
C202			C93-0552-05	CHIP C	2.0PF	C	
C204			CK73GB1E103K	CHIP C	0.010UF	K	
C207,208			CK73GB1H102K	CHIP C	1000PF	K	
C209			CK73GB1C104K	CHIP C	0.10UF	K	
C210			CK73GB1E103K	CHIP C	0.010UF	K	
C211			CC73GCH1H160J	CHIP C	16PF	J	
C212			CC73GCH1H020B	CHIP C	2.0PF	B	
C213			CK73GB1H102K	CHIP C	1000PF	K	
C214			CC73GCH1H150J	CHIP C	15PF	J	
C215			CC73GCH1H020B	CHIP C	2.0PF	B	
C216			CC73GCH1H160J	CHIP C	16PF	J	
C217			CC73GCH1H180J	CHIP C	18PF	J	
C222			CK73GB1H471K	CHIP C	470PF	K	
C224			CK73GB1H471K	CHIP C	470PF	K	
C225,226			CK73GB1C104K	CHIP C	0.10UF	K	
C228			CK73GB1C104K	CHIP C	0.10UF	K	
C229			CK73GB1H471K	CHIP C	470PF	K	
C230			CK73GB1H102K	CHIP C	1000PF	K	
C231			CC73GCH1H101J	CHIP C	100PF	J	
C232			CK73GB1E103K	CHIP C	0.010UF	K	
C233-236			CK73GB1H102K	CHIP C	1000PF	K	
C237			CC73GCH1H270J	CHIP C	27PF	J	
C238			CK73GB1H102K	CHIP C	1000PF	K	
C239			CC73GCH1H180J	CHIP C	18PF	J	
C240			CK73GB1H471K	CHIP C	470PF	K	
C241			CC73GCH1H470J	CHIP C	47PF	J	
C242			CC73FCH1H220J	CHIP C	22PF	J	
C243			CC73GCH1H470J	CHIP C	47PF	J	
C245			CK73GB1H102K	CHIP C	1000PF	K	
C246			CK73GB1E103K	CHIP C	0.010UF	K	
C247			C92-0719-05	ELECTRO	47UF	25WV	
C250			C92-0719-05	ELECTRO	47UF	25WV	
C251			C93-0558-05	CHIP C	8.0PF	D	E
C251			C93-0562-05	CHIP C	15PF	J	E3
C252			C93-0553-05	CHIP C	3.0PF	C	
C253			C93-0603-05	CHIP C	1000PF	K	
C254			C93-0666-05	CERAMIC	24PF	500V	
C255			CC73FCH1H040C	CHIP C	4.0PF	C	
C256			C93-0556-05	CHIP C	6.0PF	D	E

PARTS LIST

TX-RX UNIT (X57-6142-XX)

Ref. No.	Address	New parts	Parts No.	Description			Desti-nation
C256			C93-0557-05	CHIP C	7.0PF	D	E3
C257			C93-0666-05	CERAMIC	24PF		
C258			C93-0668-05	CERAMIC	43PF		
C259			C93-0562-05	CHIP C	15PF	J	
C261			CC73GCH1H221J	CHIP C	220PF	J	
C262-264			CC73GCH1H820J	CHIP C	82PF	J	
C265			C93-0564-05	CHIP C	22PF	J	
C266			CC73GCH1H220J	CHIP C	22PF	J	
C267			CC73GCH1H330J	CHIP C	33PF	J	
C271			CC73GCH1H820J	CHIP C	82PF	J	
C272			CC73GCH1H470J	CHIP C	47PF	J	
C273			CC73GCH1H820J	CHIP C	82PF	J	
C274			CC73GCH1H470J	CHIP C	47PF	J	
C277-282			CC73GCH1H470J	CHIP C	47PF	J	
C283			CC73GCH1H060D	CHIP C	6.0PF	D	
C284			CC73GCH1H1R5C	CHIP C	1.5PF	C	
C285			CC73GCH1H060D	CHIP C	6.0PF	D	
C286			CC73GCH1H470J	CHIP C	47PF	J	
C288			CC73GCH1H270J	CHIP C	27PF	J	
C289			CC73GCH1H101J	CHIP C	100PF	J	
C290			CC73GCH1H270J	CHIP C	27PF	J	
C292-296			CC73GCH1H820J	CHIP C	82PF	J	
C297			CC73GCH1H220J	CHIP C	22PF	J	
C298			CC73GCH1H100D	CHIP C	10PF	D	
C299			CC73GCH1H220J	CHIP C	22PF	J	
C303			C92-0565-05	CHIP-TAN	6.8UF	10WV	
C304-306			CK73GB1H102K	CHIP C	1000PF	K	
C307			CC73GCH1H130J	CHIP C	13PF	J	
C309			CC73GCH1H270J	CHIP C	27PF	J	
C311			CC73GCH1H130J	CHIP C	13PF	J	
C312			CC73GCH1H180J	CHIP C	18PF	J	
C313			CK73GB1H103K	CHIP C	0.010UF	K	
C314			C92-0511-05	CHIP-TAN	0.15UF	35WV	
C315			CK73GB1C104K	CHIP C	0.10UF	K	
C316			CK73GB1A224K	CHIP C	0.22UF	K	
C317			CK73GB1H102K	CHIP C	1000PF	K	
C318,319			CK73GB1C104K	CHIP C	0.10UF	K	
C320			C92-0514-05	CHIP-TAN	2.2UF	10WV	
C321			CC73GCH1H060D	CHIP C	6.0PF	D	
C322			C92-0514-05	CHIP-TAN	2.2UF	10WV	
C324			CK73FB1E104K	CHIP C	0.10UF	K	
C325			C92-0002-05	CHIP-TAN	0.22UF	35WV	
C326			CK73FF1C105Z	CHIP C	1.0UF	Z	
C327			CK73FB1E104K	CHIP C	0.10UF	K	
C401			CK73GB1H102K	CHIP C	1000PF	K	
C402			C92-0628-05	CHIP-TAN	10UF	10WV	
C406			CC73FCH1H102J	CHIP C	1000PF	J	
C407			CC73FCH1H221J	CHIP C	220PF	J	
C408			C92-0628-05	CHIP-TAN	10UF	10WV	
C430			CE04EW1A101M	ELECTRO	100UF	10WV	E3
C431			CC73GCH1H020C	CHIP C	2.0PF	C	E3
C501			CK73GB1H471K	CHIP C	470PF	K	
C502			CC73GCH1H221J	CHIP C	220PF	J	
C503,504			CK73GB1H471K	CHIP C	470PF	K	
C505			CK73GB1C683K	CHIP C	0.068UF	K	
C506			CK73GB1E123K	CHIP C	0.012UF	K	
C508			CK73GB1C104K	CHIP C	0.10UF	K	
C509			CK73GB1H222K	CHIP C	2200PF	K	
C510			C92-0507-05	CHIP-TAN	4.7UF	6.3WV	
C511			CK73GB1H103K	CHIP C	0.010UF	K	

Ref. No.	Address	New parts	Parts No.	Description			Desti-nation
C512			CK73GB1H471K	CHIP C	470PF	K	
C513			CK73GB1H102K	CHIP C	1000PF	K	
C514			CK73GB1H152K	CHIP C	1500PF	K	
C515			CK73GB1C104K	CHIP C	0.10UF	K	
C516,517			CK73GB1H103K	CHIP C	0.010UF	K	
C518			CK73GB1H102K	CHIP C	1000PF	K	
C519			C92-0507-05	CHIP-TAN	4.7UF	6.3WV	
C520			CC73GCH1H221J	CHIP C	220PF	J	
C521,522			CK73GB1C104K	CHIP C	0.10UF	K	
C523			CK73GB1H103K	CHIP C	0.010UF	K	
C524			CK73GB1C104K	CHIP C	0.10UF	K	
C525			CK73GB1H103K	CHIP C	0.010UF	K	
C526			CK73GB1C104K	CHIP C	0.10UF	K	
C527			CK73GB1C683K	CHIP C	0.068UF	K	
C528			CK73GB1H102K	CHIP C	1000PF	K	
C529			CK73GB1H562J	CHIP C	5600PF	J	
C531			CK73GB1H562J	CHIP C	5600PF	J	
C533			CK73GB1H562J	CHIP C	5600PF	J	
C535			CK73GB1H102K	CHIP C	1000PF	K	
C536			CC73GCH1H030C	CHIP C	3.0PF	C	
C537			CK73GB1H272K	CHIP C	2700PF	K	
C539			CK73GB1H272K	CHIP C	2700PF	K	
C540			CC73GCH1H391J	CHIP C	390PF	J	
C541			CC73GCH1H100D	CHIP C	10PF	D	
C542			CC73GCH1H391J	CHIP C	390PF	J	
C543			CK73GB1H272K	CHIP C	2700PF	K	
C544			CC73GCH1H030C	CHIP C	3.0PF	C	
C545			CK73GB1H102K	CHIP C	1000PF	K	
C546			CK73GB1H122K	CHIP C	1200PF	K	
C547			CK73GB1H102K	CHIP C	1000PF	K	
C548			C92-0560-05	CHIP-TAN	10UF	6.3WV	
C549			CK73GB1C104K	CHIP C	0.10UF	K	
C550			CC73GCH1H101J	CHIP C	100PF	J	
C552			CK73GB1C333K	CHIP C	0.033UF	K	
C553			CK73GB1H472K	CHIP C	4700PF	K	
C554-558			CK73GB1C104K	CHIP C	0.10UF	K	
C559			CK73GB1H102K	CHIP C	1000PF	K	
C560			C92-0507-05	CHIP-TAN	4.7UF	6.3WV	
C561			CK73GB1H102K	CHIP C	1000PF	K	
C562,563			CK73GB1H472K	CHIP C	4700PF	K	
C564			CK73GB1E223K	CHIP C	0.022UF	K	
C565			CK73GB1H102K	CHIP C	1000PF	K	
C566			CC73GCH1H101J	CHIP C	100PF	J	
C567			CK73GB1C273K	CHIP C	0.027UF	K	
C568			C92-0507-05	CHIP-TAN	4.7UF	6.3WV	
C569			CC73GCH1H470J	CHIP C	47PF	J	
C570			CK73GB1C104K	CHIP C	0.10UF	K	
C571			CK73GB1H102K	CHIP C	1000PF	K	
C572			CK73FB1H563K	CHIP C	0.056UF	K	
C574			CK73GB1C104K	CHIP C	0.10UF	K	
C575			CK73FB1C334K	CHIP C	0.33UF	K	
C576			CK73GB1C473K	CHIP C	0.047UF	K	
C577			CK73GB1C104K	CHIP C	0.10UF	K	
C578			CK73GB1H103K	CHIP C	0.010UF	K	
C579			CK73GB1H472K	CHIP C	4700PF	K	
C580			CK73GB1H102K	CHIP C	1000PF	K	
C581,582			CK73GB1H103K	CHIP C	0.010UF	K	
C583			CK73GB1H102K	CHIP C	1000PF	K	
C584			CK73GB1H471K	CHIP C	470PF	K	
C592			CK73GB1H102K	CHIP C	1000PF	K	

PARTS LIST

TX-RX UNIT (X57-6142-XX)

Ref. No.	Address	New parts	Parts No.	Description	Destination
C593			CK73GB1H103K	CHIP C 0.010UF K	
C594,595			CC73GCH1H270J	CHIP C 27PF J	
C596			CC73GCH1H680J	CHIP C 68PF J	
C597			CK73GB1H103K	CHIP C 0.010UF K	
C598,599			CC73GCH1H101J	CHIP C 100PF J	
C600,601			CK73GB1H102K	CHIP C 1000PF K	
C602			CK73GB1H103K	CHIP C 0.010UF K	
C603			CK73GB1C104K	CHIP C 0.10UF K	
C604			C92-0560-05	CHIP-TAN 10UF 6.3WV	
C605			CK73GB1H102K	CHIP C 1000PF K	
C606			CK73GB1H122K	CHIP C 1200PF K	
C607			CK73GB1H103K	CHIP C 0.010UF K	
C608			CK73GB1H392K	CHIP C 3900PF K	
C609,610			CK73GB1H103K	CHIP C 0.010UF K	
C613			C92-0606-05	CHIP-TAN 4.7UF 10WV	
C614			CK73GB1H102K	CHIP C 1000PF K	
C616			CK73GB1H102K	CHIP C 1000PF K	
C617			CC73GCH1H101J	CHIP C 100PF J	
C620			CC73GCH1H101J	CHIP C 100PF J	
C622,623			CK73GB1H102K	CHIP C 1000PF K	
C624			CC73GCH1H101J	CHIP C 100PF J	
C625			CK73GB1H102K	CHIP C 1000PF K	
C626			CC73GCH1H101J	CHIP C 100PF J	
C627			CK73GB1H102K	CHIP C 1000PF K	
C628			CC73GCH1H101J	CHIP C 100PF J	
C630			CK73GB1H102K	CHIP C 1000PF K	
C631-634			CC73GCH1H101J	CHIP C 100PF J	
C710			CK73GB1C104K	CHIP C 0.10UF K	
C711,712			CK73GB1H222K	CHIP C 2200PF K	
C713			CK73GB1H102K	CHIP C 1000PF K	
C714			CC73GCH1H331J	CHIP C 330PF J	
C715			CK73GB1H102K	CHIP C 1000PF K	
C718			C92-0606-05	CHIP-TAN 4.7UF 10WV	
C720			CC73GCH1H470J	CHIP C 47PF J	
C721-723			CC73GCH1H221J	CHIP C 220PF J	
C724			CK73GB1H822K	CHIP C 8200PF K	
C726			CK73GB1C104K	CHIP C 0.10UF K	
C728			C92-0772-05	CHIP-TAN 10UF 6.3WV	
-			E37-0966-05	PROCESSED LEAD WIRE	E3
CN1			E40-5737-05	PIN ASSY	
CN2			E40-5738-05	PIN ASSY	
CN3			E40-3247-05	PIN ASSY	
CN4			E40-5738-05	PIN ASSY	
CN5			E40-3247-05	PIN ASSY	
CN6			E40-3246-05	PIN ASSY	
CN7			E40-5982-05	FLAT CABLE CONNECTOR	
CN501			E40-5823-05	FLAT CABLE CONNECTOR	
CN502			E40-5982-05	FLAT CABLE CONNECTOR	
J1	2C		E11-0442-05	3.5D PHONE JACK (3P)	
J501	1B		E08-0877-05	MODULAR JACK	
-			F20-3321-04	INSULATING SHEET	E3
-			J31-0543-05	COLLAR (LH-5-1.5)	
CF1			L72-0372-05	CERAMIC FILTER	
CF1		*	L72-0998-05	CERAMIC FILTER	
CF2			L72-0376-05	CERAMIC FILTER	
CF2			L72-0986-05	CERAMIC FILTER	
L1			L40-1005-34	SMALL FIXED INDUCTOR (10UH)	

Ref. No.	Address	New parts	Parts No.	Description	Destination
L2			L92-0138-05	FERRITE CHIP	
L3			L40-4775-44	SMALL FIXED INDUCTOR (47.0NH)	
L4			L40-8272-37	SMALL FIXED INDUCTOR (0.082UH)	
L5			L40-1092-34	SMALL FIXED INDUCTOR	
L6			L34-4459-05	COIL	
L7			L40-8275-92	SMALL FIXED INDUCTOR (82NH)	
L14			L92-0191-05	FERRITE CHIP	
L202-204			L34-4641-05	COIL	
L207-209			L39-1272-05	TOROIDAL COIL	
L211,212			L40-6871-34	SMALL FIXED INDUCTOR (68NH)	
L213			L34-4478-05	AIR-CORE COIL	
L214			L34-4480-05	AIR-CORE COIL	
L215			L34-0742-05	AIR-CORE COIL	
L216			L34-4482-05	AIR-CORE COIL	
L217,218			L34-0742-05	AIR-CORE COIL	
L219			L40-3978-67	SMALL FIXED INDUCTOR (39NH)	
L220			L40-2288-67	SMALL FIXED INDUCTOR (220NH)	
L221			L40-2778-67	SMALL FIXED INDUCTOR (27NH)	
L222			L40-6878-67	SMALL FIXED INDUCTOR (68NH)	
L223			L40-4778-67	SMALL FIXED INDUCTOR (47NH)	
L225			L92-0193-05	FERRITE CHIP	
L226			L92-0155-05	FERRITE CHIP	
L227			L40-3378-67	SMALL FIXED INDUCTOR (33NH)	
L228			L40-1575-54	SMALL FIXED INDUCTOR (15NH)	
L300,301			L40-3371-36	SMALL FIXED INDUCTOR (33NH)	
L302			L40-1005-34	SMALL FIXED INDUCTOR (10UH)	
L303			L40-4775-34	SMALL FIXED INDUCTOR (47NH)	
L501-508			L92-0138-05	FERRITE CHIP	
X1			L77-1864-05	TCXO (16.8MHZ)	
X2			L77-1762-05	CRYSTAL RESONATOR (44.395MHZ)	
X501			L77-1708-05	CRYSTAL RESONATOR (3.579545MHZ)	
X502			L78-0462-05	RESONATOR (9.8304M)	
XF1			L71-0572-05	MCF (44.85MHZ)	
CP501			R90-0724-05	MULTI-COMP 1K X4	
R1			RK73GB1J102J	CHIP R 1.0K J 1/16W	
R2			R92-1252-05	CHIP R 0 OHM J 1/16W	
R3,4			RK73GB1J102J	CHIP R 1.0K J 1/16W	
R6,7			R92-1252-05	CHIP R 0 OHM J 1/16W	
R8			RK73GB1J102J	CHIP R 1.0K J 1/16W	
R9			R92-1252-05	CHIP R 0 OHM J 1/16W	
R10,11			RK73GB1J102J	CHIP R 1.0K J 1/16W	
R12			R92-1252-05	CHIP R 0 OHM J 1/16W	
R14			RK73GB1J473J	CHIP R 47K J 1/16W	
R15			RK73GB1J103J	CHIP R 10K J 1/16W	
R16			RK73GB1J104J	CHIP R 100K J 1/16W	
R17,18			R92-1252-05	CHIP R 0 OHM J 1/16W	
R19			RK73GB1J153J	CHIP R 15K J 1/16W	
R20			RK73GB1J104J	CHIP R 100K J 1/16W	
R21			RK73GB1J563J	CHIP R 56K J 1/16W	
R22			RK73GB1J104J	CHIP R 100K J 1/16W	
R23			RK73GB1J184J	CHIP R 180K J 1/16W	
R25			RK73GB1J394J	CHIP R 390K J 1/16W	
R26			RK73GB1J104J	CHIP R 100K J 1/16W	
R27			RK73GB1J473J	CHIP R 47K J 1/16W	
R28			R92-1252-05	CHIP R 0 OHM J 1/16W	
R29			RK73GB1J220J	CHIP R 22 J 1/16W	
R30,31			RK73GB1J104J	CHIP R 100K J 1/16W	
R32			RK73GB1J474J	CHIP R 470K J 1/16W	
R33			RK73GB1J153J	CHIP R 15K J 1/16W	

PARTS LIST

TX-RX UNIT (X57-6142-XX)

Ref. No.	Address	New parts	Parts No.	Description	Destination
R34			R92-1252-05	CHIP R 0 OHM J 1/16W	
R35			RK73GB1J223J	CHIP R 22K J 1/16W	
R36			RK73GB1J103J	CHIP R 10K J 1/16W	
R37			R92-1252-05	CHIP R 0 OHM J 1/16W	
R39			RK73GB1J101J	CHIP R 100 J 1/16W	
R40			RK73GB1J103J	CHIP R 10K J 1/16W	
R41			RK73GB1J122J	CHIP R 1.2K J 1/16W	
R42			RK73GB1J104J	CHIP R 100K J 1/16W	
R44			RK73GB1J473J	CHIP R 47K J 1/16W	
R45			RK73GB1J104J	CHIP R 100K J 1/16W	
R46			RK73GB1J103J	CHIP R 10K J 1/16W	E
R47			RK73GB1J473J	CHIP R 47K J 1/16W	
R48			RK73GB1J122J	CHIP R 1.2K J 1/16W	
R49			RK73GB1J102J	CHIP R 1.0K J 1/16W	
R50			RK73GB1J103J	CHIP R 10K J 1/16W	
R52			R92-1252-05	CHIP R 0 OHM J 1/16W	
R55			RK73GB1J153J	CHIP R 15K J 1/16W	
R56			RK73GB1J103J	CHIP R 10K J 1/16W	
R57			RK73GB1J473J	CHIP R 47K J 1/16W	
R58			RK73GB1J102J	CHIP R 1.0K J 1/16W	
R59			R92-1252-05	CHIP R 0 OHM J 1/16W	
R60			RK73GB1J472J	CHIP R 4.7K J 1/16W	
R61			RK73GB1J223J	CHIP R 22K J 1/16W	
R62			RK73GB1J101J	CHIP R 100 J 1/16W	
R63			R92-1252-05	CHIP R 0 OHM J 1/16W	
R65			R92-1252-05	CHIP R 0 OHM J 1/16W	
R66			RK73GB1J103J	CHIP R 10K J 1/16W	
R67			RK73GB1J101J	CHIP R 100 J 1/16W	
R68			RK73GB1J390J	CHIP R 39 J 1/16W	
R69			RK73GB1J102J	CHIP R 1.0K J 1/16W	
R70-73			R92-1252-05	CHIP R 0 OHM J 1/16W	
R74			RK73GB1J473J	CHIP R 47K J 1/16W	
R75			RK73GB1J102J	CHIP R 1.0K J 1/16W	
R76			RK73GB1J153J	CHIP R 15K J 1/16W	
R77			RK73GB1J333J	CHIP R 33K J 1/16W	
R78			RK73GB1J561J	CHIP R 560 J 1/16W	
R80			RK73GB1J473J	CHIP R 47K J 1/16W	
R85			RK73GB1J102J	CHIP R 1.0K J 1/16W	E
R85			RK73GB1J122J	CHIP R 1.2K J 1/16W	E3
R86			R92-1252-05	CHIP R 0 OHM J 1/16W	
R89			R92-1252-05	CHIP R 0 OHM J 1/16W	
R90			RK73GB1J2R2J	CHIP R 2.2 J 1/16W	
R91			RK73GB1J472J	CHIP R 4.7K J 1/16W	
R94			R92-1252-05	CHIP R 0 OHM J 1/16W	
R96			RK73GB1J181J	CHIP R 180 J 1/16W	
R97,98			RK73GB1J473J	CHIP R 47K J 1/16W	
R99			RK73GB1J152J	CHIP R 1.5K J 1/16W	
R104			R92-1252-05	CHIP R 0 OHM J 1/16W	
R106			R92-1252-05	CHIP R 0 OHM J 1/16W	
R107			RK73GB1J473J	CHIP R 47K J 1/16W	
R109			R92-0670-05	CHIP R 0 OHM	
R110			RK73GB1J470J	CHIP R 47 J 1/16W	
R111			RK73GB1J331J	CHIP R 330 J 1/16W	
R112			RK73GB1J473J	CHIP R 47K J 1/16W	
R113			RK73GB1J472J	CHIP R 4.7K J 1/16W	
R114			RK73GB1J392J	CHIP R 3.9K J 1/16W	
R116			RK73GB1J473J	CHIP R 47K J 1/16W	
R119			RK73GB1J103J	CHIP R 10K J 1/16W	
R120			RK73GB1J332J	CHIP R 3.3K J 1/16W	E3
R120,121			RK73GB1J472J	CHIP R 4.7K J 1/16W	E

Ref. No.	Address	New parts	Parts No.	Description	Destination
R121			RK73GB1J472J	CHIP R 4.7K J 1/16W	E3
R122			RK73GB1J392J	CHIP R 3.9K J 1/16W	
R123			RK73GB1J153J	CHIP R 15K J 1/16W	
R124-126			RK73GB1J223J	CHIP R 22K J 1/16W	
R127			RK73FB2A152J	CHIP R 1.5K J 1/10W	E
R127			RK73FB2A822J	CHIP R 8.2K J 1/10W	E3
R128			RK73GB1J223J	CHIP R 22K J 1/16W	
R129			RK73GB1J220J	CHIP R 22 J 1/16W	
R130,131			RK73GB1J223J	CHIP R 22K J 1/16W	
R132			RK73GB1J104J	CHIP R 100K J 1/16W	
R133			RK73GB1J153J	CHIP R 15K J 1/16W	
R134			RK73GB1J473J	CHIP R 47K J 1/16W	
R135			R92-1261-05	CHIP R 150 J 1/2W	
R137			RK73GB1J473J	CHIP R 47K J 1/16W	
R138			RK73FB2A100J	CHIP R 10 J 1/10W	
R139			R92-0670-05	CHIP R 0 OHM	
R140			R92-1252-05	CHIP R 0 OHM J 1/16W	
R141			RK73GB1J104J	CHIP R 100K J 1/16W	
R142			R92-0699-05	CHIP R 10 J 1/2W	
R143			RK73GB1J102J	CHIP R 1.0K J 1/16W	
R144			RK73GB1J223J	CHIP R 22K J 1/16W	
R145			RK73GB1J104J	CHIP R 100K J 1/16W	
R146			R92-1215-05	CHIP R 470 J 1/2W	
R147			RK73FB2A103J	CHIP R 10K J 1/10W	E3
R147			RK73FB2A563J	CHIP R 56K J 1/10W	E
R148			RK73FB2A472J	CHIP R 4.7K J 1/10W	
R149			RK73FB2A123J	CHIP R 12K J 1/10W	E3
R149			RK73FB2A183J	CHIP R 18K J 1/10W	E
R150			R92-0670-05	CHIP R 0 OHM	
R151-153			R92-1252-05	CHIP R 0 OHM J 1/16W	
R154			RK73GB1J103J	CHIP R 10K J 1/16W	
R155			RK73GB1J333J	CHIP R 33K J 1/16W	
R156			RK73GB1J471J	CHIP R 470 J 1/16W	
R157			RK73GB1J101J	CHIP R 100 J 1/16W	
R158			RK73GB1J102J	CHIP R 1.0K J 1/16W	
R161			RK73GB1J474J	CHIP R 470K J 1/16W	
R162,163			RK73FB2A103J	CHIP R 10K J 1/10W	
R164			RK73GB1J122J	CHIP R 1.2K J 1/16W	
R165,166			R92-1252-05	CHIP R 0 OHM J 1/16W	
R168			R92-1252-05	CHIP R 0 OHM J 1/16W	
R169			RK73GB1J474J	CHIP R 470K J 1/16W	
R170			R92-0670-05	CHIP R 0 OHM	
R171			RK73GB1J3R3J	CHIP R 3.3 J 1/16W	
R172			RK73GB1J561J	CHIP R 560 J 1/16W	
R173			RK73GB1J181J	CHIP R 180 J 1/16W	
R174			R92-1252-05	CHIP R 0 OHM J 1/16W	
R176			R92-0670-05	CHIP R 0 OHM	
R179			R92-1252-05	CHIP R 0 OHM J 1/16W	
R201			R92-1252-05	CHIP R 0 OHM J 1/16W	
R209			R92-1252-05	CHIP R 0 OHM J 1/16W	
R211			RK73GB1J472J	CHIP R 4.7K J 1/16W	
R212			RK73GB1J272J	CHIP R 2.7K J 1/16W	
R213			RK73GB1J150J	CHIP R 15 J 1/16W	
R214			RK73GB1J272J	CHIP R 2.7K J 1/16W	
R215			RK73GB1J104J	CHIP R 100K J 1/16W	
R217			RK73GB1J470J	CHIP R 47 J 1/16W	
R218-220			RK73GB1J104J	CHIP R 100K J 1/16W	
R221			RK73GB1J274J	CHIP R 270K J 1/16W	
R222			R92-1252-05	CHIP R 0 OHM J 1/16W	
R223			RK73GB1J104J	CHIP R 100K J 1/16W	

PARTS LIST

TX-RX UNIT (X57-6142-XX)

Ref. No.	Address	New parts	Parts No.	Description				Desti-nation
R224			R92-1252-05	CHIP R	0 OHM	J	1/16W	
R225			RK73GB1J820J	CHIP R	82	J	1/16W	
R226			RK73GB1J472J	CHIP R	4.7K	J	1/16W	
R228			RK73GB1J271J	CHIP R	270	J	1/16W	
R229			RK73GB1J102J	CHIP R	1.0K	J	1/16W	
R230			RK73GB1J180J	CHIP R	18	J	1/16W	
R231			RK73GB1J271J	CHIP R	270	J	1/16W	
R232			RK73GB1J222J	CHIP R	2.2K	J	1/16W	
R233			RK73GB1J103J	CHIP R	10K	J	1/16W	
R234			RK73GB1J100J	CHIP R	10	J	1/16W	
R235			RK73GB1J222J	CHIP R	2.2K	J	1/16W	
R236			RK73GB1J560J	CHIP R	56	J	1/16W	
R237			RK73GB1J470J	CHIP R	47	J	1/16W	
R238			RK73GB1J152J	CHIP R	1.5K	J	1/16W	
R239			RK73FB2A100J	CHIP R	10	J	1/10W	
R240			R92-0685-05	CHIP R	22	J	1/2W	
R241			RK73FB2A102J	CHIP R	1.0K	J	1/10W	
R246			RK73GB1J182J	CHIP R	1.8K	J	1/16W	
R247			RK73GB1J2R7J	CHIP R	2.7	J	1/16W	
R248			RK73GB1J182J	CHIP R	1.8K	J	1/16W	
R249			RK73FB2A221J	CHIP R	220	J	1/10W	E3
R250			RK73FB2A220J	CHIP R	22	J	1/10W	E3
R250			R92-0670-05	CHIP R	0 OHM			E
R251			RK73FB2A221J	CHIP R	220	J	1/10W	E3
R300-303			RK73GB1J470J	CHIP R	47	J	1/16W	
R304			R92-1252-05	CHIP R	0 OHM	J	1/16W	
R305			RK73GB1J103J	CHIP R	10K	J	1/16W	
R306			RK73GB1J271J	CHIP R	270	J	1/16W	
R307			R92-1252-05	CHIP R	0 OHM	J	1/16W	
R308			RK73GB1J101J	CHIP R	100	J	1/16W	
R309			RK73GB1J333J	CHIP R	33K	J	1/16W	
R310			RK73GB1J103J	CHIP R	10K	J	1/16W	
R311			RK73GB1J271J	CHIP R	270	J	1/16W	
R312			RK73GB1J102J	CHIP R	1.0K	J	1/16W	
R313			RK73GB1J153J	CHIP R	15K	J	1/16W	
R314			RK73GB1J273J	CHIP R	27K	J	1/16W	
R315			RK73GB1J103J	CHIP R	10K	J	1/16W	
R316			RK73GB1J101J	CHIP R	100	J	1/16W	
R317			R92-1252-05	CHIP R	0 OHM	J	1/16W	
R318			RK73GB1J471J	CHIP R	470	J	1/16W	
R319			RK73GB1J102J	CHIP R	1.0K	J	1/16W	
R320			R92-1252-05	CHIP R	0 OHM	J	1/16W	
R401			RK73GB1J103J	CHIP R	10K	J	1/16W	
R402			RK73GB1J153J	CHIP R	15K	J	1/16W	E3
R402			RK73GB1J822J	CHIP R	8.2K	J	1/16W	E
R403			RK73GB1J122J	CHIP R	1.2K	J	1/16W	
R404			RK73GB1J473J	CHIP R	47K	J	1/16W	
R405			R92-1252-05	CHIP R	0 OHM	J	1/16W	
R406			RK73GB1J124J	CHIP R	120K	J	1/16W	
R408			R92-1252-05	CHIP R	0 OHM	J	1/16W	
R411			RK73GB1J472J	CHIP R	4.7K	J	1/16W	
R413			RK73GB1J473J	CHIP R	47K	J	1/16W	
R414			R92-1252-05	CHIP R	0 OHM	J	1/16W	
R501			RK73GB1J472J	CHIP R	4.7K	J	1/16W	
R502			RK73GB1J184J	CHIP R	180K	J	1/16W	
R503			RK73GB1J223J	CHIP R	22K	J	1/16W	
R504			RK73GB1J184J	CHIP R	180K	J	1/16W	
R505			RK73GB1J102J	CHIP R	1.0K	J	1/16W	
R506			R92-1252-05	CHIP R	0 OHM	J	1/16W	
R507,508			RK73GB1J154J	CHIP R	150K	J	1/16W	

Ref. No.	Address	New parts	Parts No.	Description				Desti-nation
R509			RK73GB1J103J	CHIP R	10K	J	1/16W	
R510			RK73GB1J105J	CHIP R	1.0M	J	1/16W	
R511			RK73GB1J102J	CHIP R	1.0K	J	1/16W	
R512			RK73GB1J681J	CHIP R	680	J	1/16W	
R513			R92-1252-05	CHIP R	0 OHM	J	1/16W	
R514			RK73GB1J102J	CHIP R	1.0K	J	1/16W	
R515			RN73GH1J913D	CHIP R	91K	D	1/16W	
R516			RK73GB1J102J	CHIP R	1.0K	J	1/16W	
R517			RK73GB1J103J	CHIP R	10K	J	1/16W	
R518			RN73GH1J333D	CHIP R	33K	D	1/16W	
R519			RN73GH1J913D	CHIP R	91K	D	1/16W	
R520			RN73GH1J683D	CHIP R	68K	D	1/16W	
R521			RK73GB1J105J	CHIP R	1.0M	J	1/16W	
R522			RN73GH1J913D	CHIP R	91K	D	1/16W	
R523			RK73GB1J154J	CHIP R	150K	J	1/16W	
R524			RN73GH1J274D	CHIP R	270K	D	1/16W	
R525			RK73GB1J823J	CHIP R	82K	J	1/16W	
R526			RK73GB1J104J	CHIP R	100K	J	1/16W	
R527			RK73GB1J103J	CHIP R	10K	J	1/16W	
R528			RK73GB1J153J	CHIP R	15K	J	1/16W	
R529			R92-1252-05	CHIP R	0 OHM	J	1/16W	
R530			RK73GB1J394J	CHIP R	390K	J	1/16W	
R531			RK73GB1J473J	CHIP R	47K	J	1/16W	
R532			RK73GB1J394J	CHIP R	390K	J	1/16W	
R533			R92-1252-05	CHIP R	0 OHM	J	1/16W	
R535			RK73GB1J155J	CHIP R	1.5M	J	1/16W	
R536			RN73GH1J682D	CHIP R	6.8K	D	1/16W	
R537,538			RK73GB1J473J	CHIP R	47K	J	1/16W	
R540			RK73GB1J474J	CHIP R	470K	J	1/16W	
R541			RK73GB1J274J	CHIP R	270K	J	1/16W	
R542			RN73GH1J683D	CHIP R	68K	D	1/16W	
R544			RK73GB1J101J	CHIP R	100	J	1/16W	
R545			RK73GB1J182J	CHIP R	1.8K	J	1/16W	
R546			RK73GB1J224J	CHIP R	220K	J	1/16W	
R547			RK73GB1J103J	CHIP R	10K	J	1/16W	
R548			RK73GB1J183J	CHIP R	18K	J	1/16W	
R550			RN73GH1J682D	CHIP R	6.8K	D	1/16W	
R551			RK73GB1J223J	CHIP R	22K	J	1/16W	
R552			RK73GB1J334J	CHIP R	330K	J	1/16W	
R553			RK73GB1J102J	CHIP R	1.0K	J	1/16W	
R554			RK73GB1J332J	CHIP R	3.3K	J	1/16W	
R555			RK73GB1J394J	CHIP R	390K	J	1/16W	
R556			RK73GB1J223J	CHIP R	22K	J	1/16W	
R558			R92-1252-05	CHIP R	0 OHM	J	1/16W	
R562			RK73GB1J273J	CHIP R	27K	J	1/16W	
R564			R92-1252-05	CHIP R	0 OHM	J	1/16W	
R566			RK73GB1J470J	CHIP R	47	J	1/16W	
R567			RK73GB1J220J	CHIP R	22	J	1/16W	
R568			RK73GB1J473J	CHIP R	47K	J	1/16W	
R569			RK73GB1J333J	CHIP R	33K	J	1/16W	
R571,572			R92-1252-05	CHIP R	0 OHM	J	1/16W	
R573			RK73GB1J104J	CHIP R	100K	J	1/16W	
R574			RK73GB1J473J	CHIP R	47K	J	1/16W	
R575			RK73GB1J103J	CHIP R	10K	J	1/16W	
R576			RK73GB1J473J	CHIP R	47K	J	1/16W	
R577			RK73GB1J153J	CHIP R	15K	J	1/16W	
R579			R92-1252-05	CHIP R	0 OHM	J	1/16W	
R580			RK73GB1J103J	CHIP R	10K	J	1/16W	
R581			RK73GB1J472J	CHIP R	4.7K	J	1/16W	
R582			R92-1252-05	CHIP R	0 OHM	J	1/16W	

PARTS LIST

TX-RX UNIT (X57-6142-XX)

Ref. No.	Address	New parts	Parts No.	Description	Desti-nation
R584			R92-1252-05	CHIP R 0 OHM J 1/16W	
R585,586			RK73GB1J473J	CHIP R 47K J 1/16W	
R587			R92-1252-05	CHIP R 0 OHM J 1/16W	
R588			RK73GB1J473J	CHIP R 47K J 1/16W	
R589			R92-1368-05	CHIP R 0 OHM	
R590-600			RK73HB1J102J	CHIP R 1.0K J 1/16W	
R601-603			R92-1368-05	CHIP R 0 OHM	
R608-610			RK73HB1J102J	CHIP R 1.0K J 1/16W	
R611			R92-1252-05	CHIP R 0 OHM J 1/16W	
R612			RK73GB1J224J	CHIP R 220K J 1/16W	
R613			RK73HB1J102J	CHIP R 1.0K J 1/16W	
R614			R92-1252-05	CHIP R 0 OHM J 1/16W	
R615			RK73HB1J102J	CHIP R 1.0K J 1/16W	
R616			RK73GB1J473J	CHIP R 47K J 1/16W	
R617,618			RK73HB1J102J	CHIP R 1.0K J 1/16W	
R619			R92-1252-05	CHIP R 0 OHM J 1/16W	
R620			RK73HB1J102J	CHIP R 1.0K J 1/16W	
R621			R92-1252-05	CHIP R 0 OHM J 1/16W	
R622,623			RK73HB1J102J	CHIP R 1.0K J 1/16W	
R624			R92-1252-05	CHIP R 0 OHM J 1/16W	
R625-627			RK73HB1J102J	CHIP R 1.0K J 1/16W	
R628,629			R92-1368-05	CHIP R 0 OHM	
R630			RK73HB1J102J	CHIP R 1.0K J 1/16W	
R631			R92-1368-05	CHIP R 0 OHM	
R632			RK73HB1J102J	CHIP R 1.0K J 1/16W	
R633			R92-1368-05	CHIP R 0 OHM	
R634			RK73HB1J102J	CHIP R 1.0K J 1/16W	
R635			R92-1368-05	CHIP R 0 OHM	
R636,637			RK73HB1J102J	CHIP R 1.0K J 1/16W	
R638			R92-1368-05	CHIP R 0 OHM	
R639			RK73HB1J102J	CHIP R 1.0K J 1/16W	
R640			R92-1368-05	CHIP R 0 OHM	
R641			RK73HB1J102J	CHIP R 1.0K J 1/16W	
R642			R92-1368-05	CHIP R 0 OHM	
R643			RK73HB1J102J	CHIP R 1.0K J 1/16W	
R644			R92-1368-05	CHIP R 0 OHM	
R645			RK73GB1J472J	CHIP R 4.7K J 1/16W	
R646,647			RK73HB1J102J	CHIP R 1.0K J 1/16W	
R649			RK73HB1J102J	CHIP R 1.0K J 1/16W	
R650-652			R92-1368-05	CHIP R 0 OHM	
R653,654			RK73HB1J102J	CHIP R 1.0K J 1/16W	
R655-657			R92-1368-05	CHIP R 0 OHM	
R658			RK73HB1J472J	CHIP R 4.7K J 1/16W	
R659-666			R92-1368-05	CHIP R 0 OHM	
R667,668			RK73GB1J181J	CHIP R 180 J 1/16W	
R670			RK73GB1J473J	CHIP R 47K J 1/16W	
R672,673			RK73GB1J473J	CHIP R 47K J 1/16W	
R674			RK73FB2A222J	CHIP R 2.2K J 1/10W	
R675			RK73GB1J473J	CHIP R 47K J 1/16W	
R676			RK73GB1J103J	CHIP R 10K J 1/16W	
R677			RK73GB1J223J	CHIP R 22K J 1/16W	
R678			RK73GB1J103J	CHIP R 10K J 1/16W	
R679			RK73FB2A390J	CHIP R 39 J 1/10W	
R680			RK73FB2A222J	CHIP R 2.2K J 1/10W	
R682			RK73GB1J473J	CHIP R 47K J 1/16W	
R683			RK73GB1J103J	CHIP R 10K J 1/16W	
R701			RK73GB1J102J	CHIP R 1.0K J 1/16W	
R702			RK73GB1J101J	CHIP R 100 J 1/16W	
R705,706			RK73GB1J473J	CHIP R 47K J 1/16W	
R710,711			RK73GB1J104J	CHIP R 100K J 1/16W	

Ref. No.	Address	New parts	Parts No.	Description	Desti-nation
R712,713			RK73GB1J473J	CHIP R 47K J 1/16W	
R714			RK73GB1J103J	CHIP R 10K J 1/16W	
R716			RK73GB1J472J	CHIP R 4.7K J 1/16W	
R718			RK73GB1J154J	CHIP R 150K J 1/16W	
R719			RK73GB1J103J	CHIP R 10K J 1/16W	
R720			RK73GB1J683J	CHIP R 68K J 1/16W	
R721			RK73GB1J334J	CHIP R 330K J 1/16W	
R722			RK73FB2A680J	CHIP R 68 J 1/10W	
R723			R92-1252-05	CHIP R 0 OHM J 1/16W	
R724			RK73GB1J392J	CHIP R 3.9K J 1/16W	
R725			RK73GB1J562J	CHIP R 5.6K J 1/16W	
R726			R92-1252-05	CHIP R 0 OHM J 1/16W	
R727			RK73GB1J472J	CHIP R 4.7K J 1/16W	
R730			RK73GB1J472J	CHIP R 4.7K J 1/16W	
VR1			R32-0658-05	SEMI FIXED VARIABLE RESISTOR	
D1-6			DA204U	DIODE	
D1-6			HSB123	DIODE	
D7			02DZ20(Y,Z)	ZENER DIODE	
D8,9			DA204U	DIODE	
D8,9			HSB123	DIODE	
D11			DAN202U	DIODE	
D12-14			DA204U	DIODE	
D12-14			HSB123	DIODE	
D15			DAN235E	DIODE	
D16			1SS355	DIODE	
D17			DA204U	DIODE	
D17			HSB123	DIODE	
D20			1SS355	DIODE	
D21			02DZ5.6(X,Y)	ZENER DIODE	
D22,23			DAN235E	DIODE	
D24			MINISMDC075-02	VARISTOR	
D26			1SS355	DIODE	
D27			HSM88AS	DIODE	
D28			02DZ15(X,Y)	ZENER DIODE	
D30			HSM88AS	DIODE	
D31			1SS355	DIODE	
D32			22ZR-10D	SURGE ABSORBER	
D34			02DZ18(X,Y)	ZENER DIODE	
D35			MA742	DIODE	
D37			DSA3A1	DIODE	
D206-208			1SV282	VARIABLE CAPACITANCE DIODE	
D209,210			HSB123	DIODE	
D211			MA4PH633	DIODE	
D212,213			XB15A709	DIODE	
D501			DA204U	DIODE	
D501			HSB123	DIODE	
D502			MINISMDC075-02	VARISTOR	
D503-505			DA204U	DIODE	
D503-505			HSB123	DIODE	
D507			DAN202U	DIODE	
D508,509			MA742	DIODE	
D510			HSC119	DIODE	
D518			02DZ9.1(X,Y)	ZENER DIODE	
D520			MA2S111	DIODE	
IC1			TA75W01FU	MOS IC	
IC2,3			TA75W558FU	MOS IC	
IC4			TC4S66F	MOS IC	
IC5			M62363FP	MOS IC	
IC6			TA75W01FU	MOS IC	
IC7,8			BU4094BCFV	MOS IC	

PARTS LIST

TX-RX UNIT (X57-6142-XX)
PLL/VCO (X58-4712-70)

Ref. No.	Address	New parts	Parts No.	Description	Desti-nation
IC9			TA78L05F	MOS IC	
IC10			LA4422	BI-POLAR IC	
IC11			TA31136FN	MOS IC	
IC12			TA78L05F	MOS IC	
IC13			AN8009M	MOS IC	
IC14			TA7808S	MOS IC	
IC15			TC4013BF(N)	MOS IC	
IC201			LMC7101BIM5	MOS IC	
IC202			GN2011(Q)	MOS IC	
IC300			SA7025DK	MOS IC	
IC400	1C		M67741H-32	HYBRID IC	
IC401			NJM2904V	MOS IC	
IC501			TA75W558FU	MOS IC	
IC502			TC75W51FU	MOS IC	
IC503			TA75W558FU	MOS IC	
IC504			TC35453F	MOS IC	
IC506			BU4066BCFV	MOS IC	
IC507			LC73872M	MOS IC	
IC508			BU4094BCFV	MOS IC	
IC509			RH5VL42C	MOS IC	
IC510			AT29C020-90TI	ROM IC	
IC510			W29C020C90	SRAM IC	
IC511		*	30620M8A-2K9GP	MPU	
IC512			AT2416N10SI2.5	ROM IC	
IC513			TA78L05F	MOS IC	
IC710,711			TA75S01F	MOS IC	
Q1			2SK1824	FET	
Q2			2SC2412K(S)	TRANSISTOR	E3
Q2,3			2SC2412K(S)	TRANSISTOR	E
Q4			DTD114EK	DIGITAL TRANSISTOR	
Q5,6			DTC114EE	DIGITAL TRANSISTOR	
Q7			2SC4215(Y)	TRANSISTOR	
Q8			DTC363EU	DIGITAL TRANSISTOR	
Q9			DTA114YUA	DIGITAL TRANSISTOR	
Q10			DTC114EE	DIGITAL TRANSISTOR	
Q11			2SA1362(Y)	TRANSISTOR	
Q12			2SB1132(Q,R)	TRANSISTOR	
Q13			DTC114EE	DIGITAL TRANSISTOR	
Q15			2SC2059K(P)	TRANSISTOR	
Q16			DTC144EE	DIGITAL TRANSISTOR	
Q17			2SC2412K(S)	TRANSISTOR	
Q18			2SK1824	FET	
Q19			2SD2394	TRANSISTOR	
Q20			2SB1188(Q)	TRANSISTOR	
Q21			FMW1	TRANSISTOR	
Q22			DTC114EE	DIGITAL TRANSISTOR	
Q23			DTA114EE	DIGITAL TRANSISTOR	
Q24			DTC144EE	DIGITAL TRANSISTOR	
Q25,26			DTA114EE	DIGITAL TRANSISTOR	
Q27			2SA1641(S,T)	TRANSISTOR	
Q28,29			DTC114EE	DIGITAL TRANSISTOR	
Q30			DTA114EE	DIGITAL TRANSISTOR	
Q31			DTC114EE	DIGITAL TRANSISTOR	
Q32			2SK1824	FET	
Q202,203			2SC3357	TRANSISTOR	
Q204			2SC2954	TRANSISTOR	
Q300			2SC4215(Y)	TRANSISTOR	
Q301,302			2SC3722K(S)	TRANSISTOR	
Q401-403			DTC114EE	DIGITAL TRANSISTOR	
Q501			DTC314TU	DIGITAL TRANSISTOR	
Q502			DTC144EE	DIGITAL TRANSISTOR	
Q503			2SC4617(S)	TRANSISTOR	
Q507			DTC144EE	DIGITAL TRANSISTOR	
Q508,509			2SC4617(S)	TRANSISTOR	
Q510			2SC4619	TRANSISTOR	
Q511			DTA144WE	DIGITAL TRANSISTOR	
Q512			DTC114EE	DIGITAL TRANSISTOR	
Q513			2SC2873(Y)	TRANSISTOR	
Q515			DTC114EE	DIGITAL TRANSISTOR	
-			212-0702-05	INSULATING TUBE	E3
PLL/VCO (X58-4712-70)					
C102,103			CK73GB1H102K	CHIP C 1000PF K	
C104			CC73GCH1H680J	CHIP C 68PF J	
C105			CK73GB1H102K	CHIP C 1000PF K	
C107			CC73GCH1H150J	CHIP C 15PF J	
C108			CC73GCH1H470J	CHIP C 47PF J	
C109			CK73GB1C104K	CHIP C 0.10UF K	
C110			CK73GB1H102K	CHIP C 1000PF K	
C111			CK73FB1C474K	CHIP C 0.47UF K	
C113			CC73GCH1H100D	CHIP C 10PF D	
C114			CK73GB1H471K	CHIP C 470PF K	
C115			CK73GB1H102K	CHIP C 1000PF K	
C117			CC73GCH1H060B	CHIP C 6.0PF B	
C119			CK73GB1H102K	CHIP C 1000PF K	
C120			CC73GCH1HR75B	CHIP C 0.75PF B	
C121			CK73GB1H102K	CHIP C 1000PF K	
C122			CC73GCH1H080B	CHIP C 8.0PF B	
C125,126			CC73GCH1H020B	CHIP C 2.0PF B	
C127			CK73GB1H102K	CHIP C 1000PF K	
C129			CK73GB1H102K	CHIP C 1000PF K	
C130,131			CC73GCH1H060B	CHIP C 6.0PF B	
C132			CC73GCH1H120J	CHIP C 12PF J	
C133,134			CK73GB1H102K	CHIP C 1000PF K	
C135,136			CC73GCH1H020B	CHIP C 2.0PF B	
C138			CC73GCH1H150J	CHIP C 15PF J	
C139			CK73GB1H102K	CHIP C 1000PF K	
C142			CK73GB1H102K	CHIP C 1000PF K	
TC101,102			C05-0384-05	CERAMIC TRIMMER CAP (10P)	
CN101			E40-5699-05	PIN ASSY	
-			F10-2279-04	SHIELDING CASE	
L101-104			L40-1005-34	SMALL FIXED INDUCTOR (10UH)	
L105			L40-6878-67	SMALL FIXED INDUCTOR (68NH)	
L106			L40-1005-34	SMALL FIXED INDUCTOR (10UH)	
L107			L40-3978-67	SMALL FIXED INDUCTOR (39NH)	
L109,110			L40-1005-34	SMALL FIXED INDUCTOR (10UH)	
L111			L40-4778-67	SMALL FIXED INDUCTOR (47NH)	
R101,102			RK73GB1J470J	CHIP R 47 J 1/16W	
R103			RK73GB1J102J	CHIP R 1.0K J 1/16W	
R104			RK73GB1J154J	CHIP R 150K J 1/16W	
R105			RK73GB1J221J	CHIP R 220 J 1/16W	
R106			RK73GB1J222J	CHIP R 2.2K J 1/16W	
R107-110			RK73GB1J103J	CHIP R 10K J 1/16W	
R111			RK73GB1J151J	CHIP R 150 J 1/16W	
R113			RK73GB1J221J	CHIP R 220 J 1/16W	

PARTS LIST

PLL/VCO (X58-4712-70)
SUB UNIT (X58-4850-10) : E3

Ref. No.	Address	New parts	Parts No.	Description	Desti-nation
R114			RK73GB1J271J	CHIP R 270 J 1/16W	
R115,116			RK73GB1J470J	CHIP R 47 J 1/16W	
R117			RK73GB1J473J	CHIP R 47K J 1/16W	
R118			RK73GB1J103J	CHIP R 10K J 1/16W	
R119			RK73GB1J101J	CHIP R 100 J 1/16W	
R120			RK73GB1J390J	CHIP R 39 J 1/16W	
R121,122			R92-1252-05	CHIP R 0 OHM J 1/16W	
D101,102			1SV283	VARIABLE CAPACITANCE DIODE	
D104			1SV283	VARIABLE CAPACITANCE DIODE	
D107			1SV283	VARIABLE CAPACITANCE DIODE	
D109			1SV214	VARIABLE CAPACITANCE DIODE	
Q101			DTC114EUA	DIGITAL TRANSISTOR	
Q102			2SK508NV(K52)	FET	
Q103			2SK508NV(K53)	FET	
Q104,105			2SC4081	TRANSISTOR	
Q106			2SC4215(Y)	TRANSISTOR	
SUB UNIT (X58-4850-10) : E3					
C1			CK73GB1C104K	CHIP C 0.10UF K	E3
C2			C92-0505-05	CHIP-TAN 10UF 16WV	E3
R1			RK73GB1J103J	CHIP R 10K J 1/16W	E3
R3			R92-1252-05	CHIP R 0 OHM J 1/16W	E3
Q1			2SC2412K(S)	TRANSISTOR	E3

Ref. No.	Address	New parts	Parts No.	Description	Desti-nation

EXPLODED VIEW

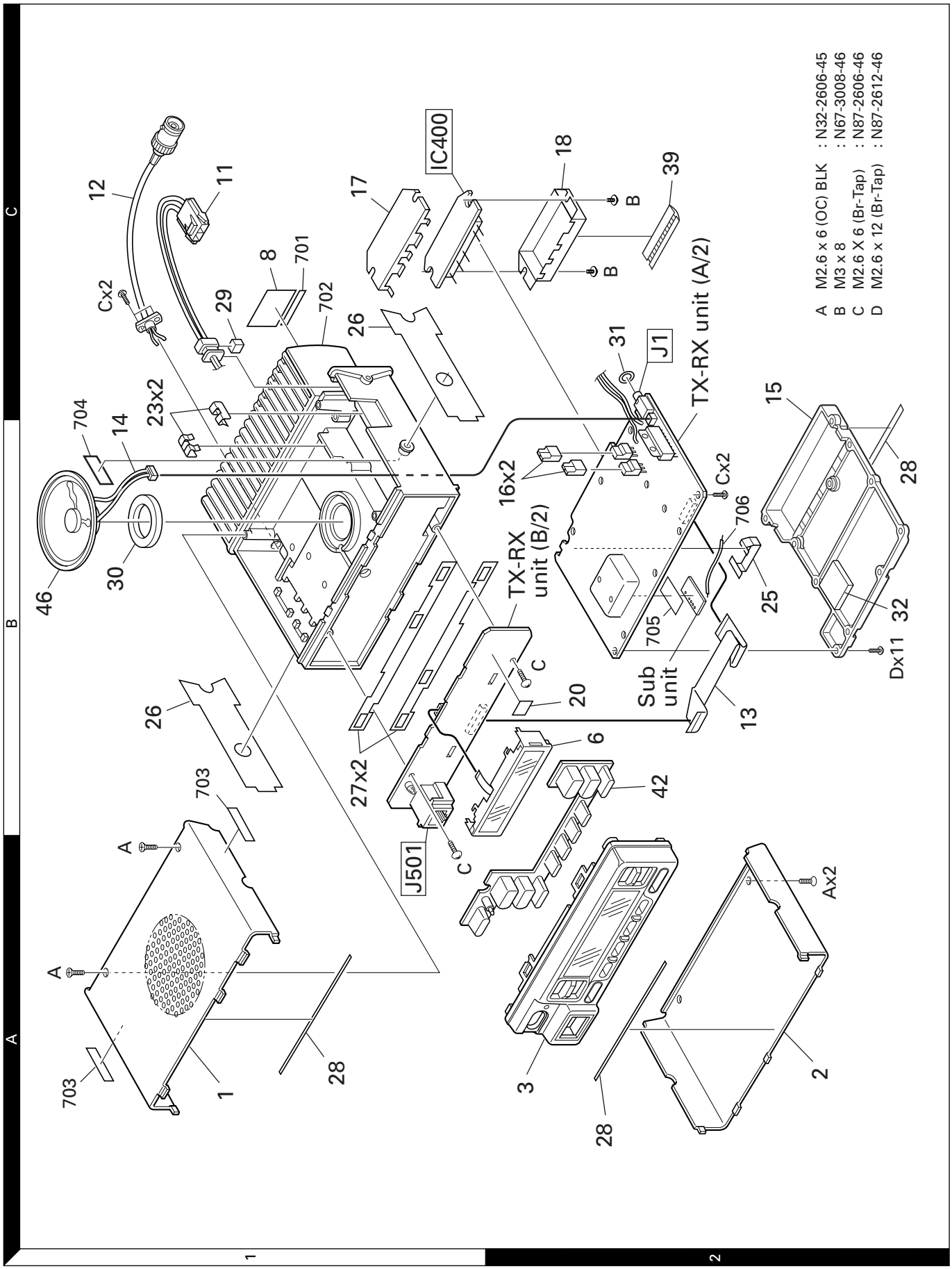

Parts with the exploded numbers larger than 700 are not supplied.

PACKING

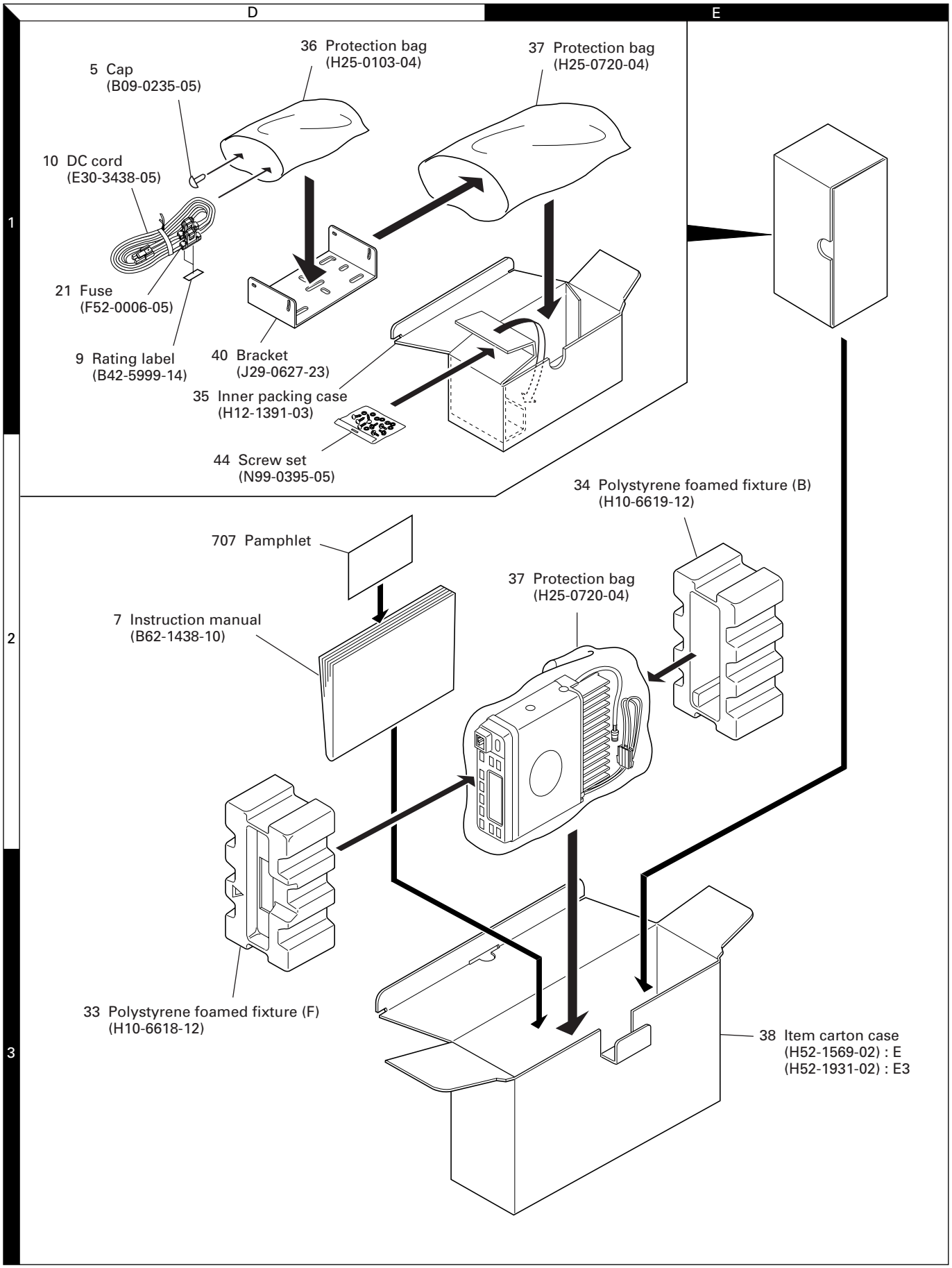

Parts with the exploded numbers larger than 700 are not supplied.

ADJUSTMENT

Test Mode

■ Test Mode Operating Features

This transceiver has a test mode. ***To enter test mode, press [B] key and turn power on. Hold [B] key until test channel No. and test signalling No. appears on LCD.*** Test mode can be inhibited by programming. To exit test mode, switch the power on again. The following functions are available in test mode.

- **Controls ("SFT" appears)**

[PTT]	Used when making a transmission.
[■]	Shift off.
[A]	FFSK 1200 bps and 2400 bps.
[B]	Shift off.
[C]	Compander function on and off.
[D]	Beat shift on and off.
[CALL]	Shift off.
[Channel Up/Down]	Shift off.
[Volume Up/Down]	Shift off.

- **Controls ("SFT" not appears)**

[PTT]	Used when making a transmission.
[■]	Monitor on and off.
[A]	Sets to the tuning mode.
[B]	Shift on.
[C]	RF power high and low.
[D]	Changes signalling.
[CALL]	Changes wide, semi-wide and narrow
[Channel Up/Down]	Changes channel.
[Volume Up/Down]	Volume up/down.

Note : If a [A], [B], [C], [D] key is pressed during transmission, the DTMF corresponding to the key that was pressed is sent.

- **LCD indicator**

"SCN"	Unused
"☎"	Lights at compander on.
"AUX"	Unused.
"P"	Lights at RF power low.
"MON"	Lights at monitor on.
"SVC"	Unused.
"✉"	Lights at FFSK 2400 bps.

- **LED indicator**

Red LED	Lights during transmission.
Green LED	Lights when there is a carrier.

- **Sub LCD indicator**

"SFT"	Appears at shift on.

■ Frequency and Signalling

The set has been adjusted for the frequencies shown in the following table. When required, re-adjust them following the adjustment procedure to obtain the frequencies you want in actual operation.

- **Frequency (MHz)**

Channel No.	E,E3	
	RX	TX
1	160.05000	160.10000
2	146.05000	146.10000
3	173.95000	173.90000
4	160.00000	160.00000
5	160.20000	160.20000
6	160.40000	160.40000
7~16	–	–

- **Signalling**

Signalling No.	RX	TX
1	None	None
2	None	100Hz square
3	QT 67.0Hz	QT 67.0Hz
4	QT 151.4Hz	QT 151.4Hz
5	QT 210.7Hz	QT 210.7Hz
6	QT 250.3Hz	QT 250.3Hz
7	DQT 023N	DQT 023N
8	DQT 754I	DQT 754I
9	DTMF DEC, (159D)	DTMF ENC, (159D)
10	None	DTMF tone 9
11	2-tone (321.7/928.1Hz)	None
12	Single tone 1200Hz	Single tone 1200Hz
13	5-tone DEC. (EIA #12345)	5-tone ENC. (EIA #12345)
14	None	FFSK
15	FFSK code	FFSK code

■ Preparations for Tuning the Transceiver

Before attempting to tune the transceiver, connect the unit to a suitable power supply.

Whenever the transmitter is turned, the unit must be connected to a suitable dummy load (i.e. power meter).

The speaker output connector must be terminated with a 4Ω dummy load and connected to an AC voltmeter and an audio distortion meter or a SINAD measurement meter at all times during tuning.

■ Transceiver Tuning (To place transceiver in tuning mode)

Channel appears on LCD. Set channel according to tuning requirements.

LCD display (Test mode)

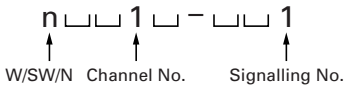

ADJUSTMENT

Press [A], now in tuning mode. Use [C] button to write tuning data through tuning modes, and [Channel Up/Down] to adjust tuning requirements (1 to 256 appears on LCD).

Use [D] button to select the adjustment item through tuning modes. Use [B] button to adjust 3 or 5-point tuning, and use [CALL] button to switch between wide/semi-wide/narrow.

LCD display (Tuning mode)

F R E Q ␣ ␣ ␣ 1

Adjustment item Adjustment (1~256)

- **Panel Tuning Mode (MHz)**

Test channel	RX frequency	TX frequency
L	146.05000	146.10000
L2	153.05000	153.10000
C	160.05000	160.10000
H2	167.05000	167.10000
H	173.95000	173.90000

- **Tuning flow**

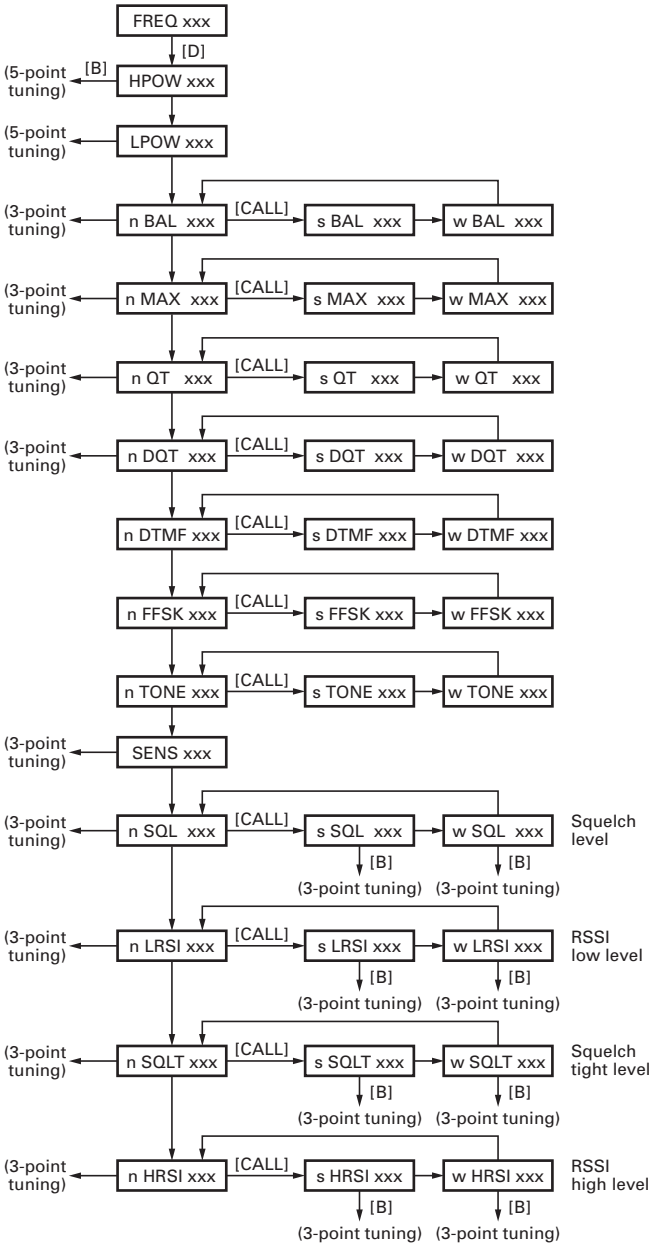

- **5-point tuning (ex. RF power high)**

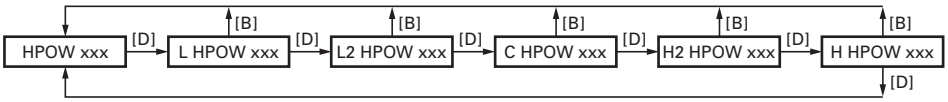

- **3-point tuning (ex. Maximum deviation (Narrow))**

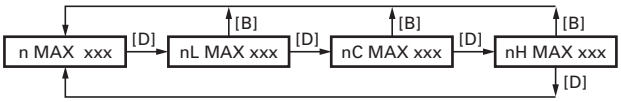

ADJUSTMENT

Test Equipment Required for Alignment

Test Equipment	Major Specifications	
1. Standard Signal Generator (SSG)	Frequency Range Modulation Output	136 to 174MHz Frequency modulation and external modulation –127dBm/0.1μV to greater than –7dBm/100mV
2. Power Meter	Input Impedance Operation Frequency Measurement Capability	50Ω 136 to 174MHz or more Vicinity of 100W
3. Deviation Meter	Frequency Range	136 to 174MHz
4. Digital Volt Meter (DVM)	Measuring Range Accuracy	1 to 20V DC High input impedance for minimum circuit loading
5. Oscilloscope		DC through 30MHz
6. High Sensitivity Frequency Counter	Frequency Range Frequency Stability	10Hz to 1000MHz 0.2ppm or less
7. Ammeter		20A
8. AF Volt Meter (AF VTVM)	Frequency Range Voltage Range	50Hz to 10kHz 1mV to 10V
9. Audio Generator (AG)	Frequency Range Output	20Hz to 20kHz or more 0 to 1V
10. Distortion Meter	Capability Input Level	3% or less at 1kHz 50mV to 10Vrms
11. 4Ω Dummy Load		Approx. 4Ω, 10W or more
12. Regulated Power Supply		13.2V, approx. 20A (adjustable from 9 to 20V) Useful if ammeter requipped

Tuning cable (E30-3383-05)

Adapter cable (E30-3383-05) is required for injecting an audio if PC tuning is used.
See "PC Mode" section for the connection.

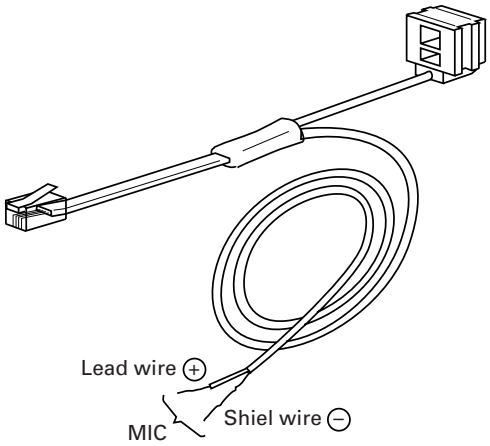

Test cable for microphone input (E30-3360-08)

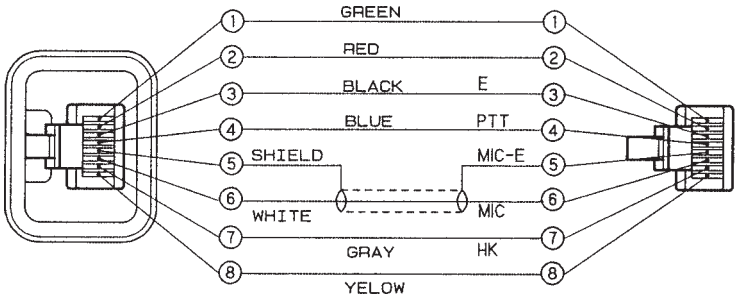

MIC connector (Front view)

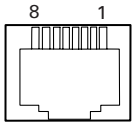

1 : BLC
2 : PSB
3 : E
4 : PTT
5 : ME
6 : MIC
7 : HOOK
8 : CM

ADJUSTMENT

Adjustment Location

■ Switch

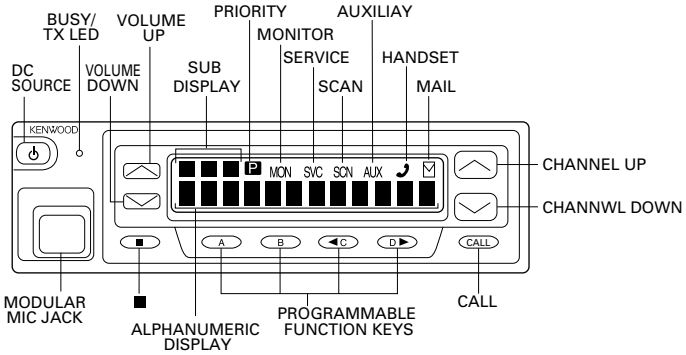

■ Note

- **Flash memory**

The firmware program (User mode, Test mode, Tuning mode, etc.) and the data programmed by the FPU (KPG-60D) for the flash memory, is stored in memory. When parts are changed, program the data again.

- **EEPROM**

The tuning data (Deviation, Squelch, etc.) for the EEPROM, is stored in memory. When parts are changed, readjust the transceiver.

■ Adjustment Point

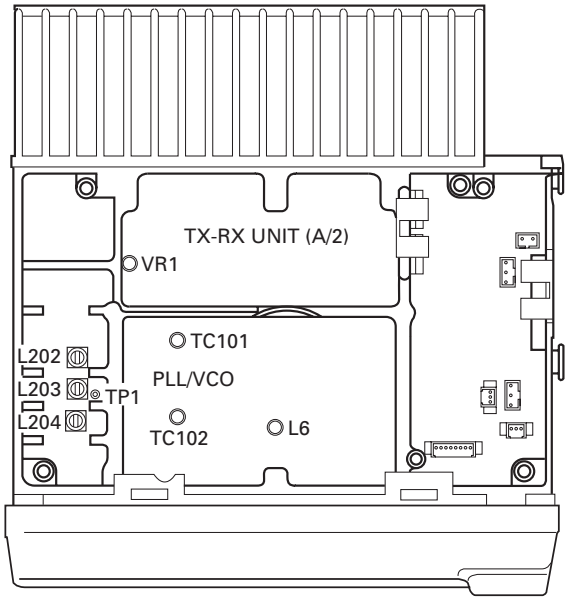

■ Repair Jig (Chassis)

Use jig (Part No. : A10-4010-02) for repairing the TK-780. The jig facilitates the voltage check when the voltage on the component side TX-RX unit (A/2) is checked during repairs.

Common Section

Item	Condition	Measurement			Adjustment			Specifications/Remarks
		Test-equipment	Unit	Terminal	Unit	Parts	Method	
1. PLL lock voltage	1) Set test mode CH : CH3 - Sig1 PTT : OFF (Receive) PTT : ON (Transmit)	DVM Power meter	TX-RX (A/2)	TP1	PLL	TC101	1.5V (Receive)	±0.1V
						TC102	1.5V (Transmit)	
	2) CH : CH2 - Sig1 PTT : OFF (Receive) PTT : ON (Transmit)						Check	8.0V or less

ADJUSTMENT

Receiver Section

Item	Condition	Measurement			Adjustment			Specifications/Remarks
		Test-equipment	Unit	Terminal	Unit	Parts	Method	
1. Discriminator	1) Set test mode CH : CH1 - Sig1 SSG output : –53dBm AF : 1.4V/4Ω	SSG AF VTVM Oscilloscope	Rear panel	ANT ACC (EXT.SP)	TX-RX (A/2)	L6	AF output voltage maximum.	
2. Sensitivity	1) Set test mode Select "SENS" in tuning mode. "L SENS" SSG freq' : 146.050MHz SSG output : –118dBm/0.31μV SSG MOD : 1.5kHz AF output : 1V/4Ω	SSG AF VTVM Distortion meter Oscilloscope AG		ANT ACC (EXT.SP)			Adjust for maximum SINAD.	
	2) "C SENS" SSG freq' : 160.050MHz						Adjust for maximum SINAD.	
	3) "H SENS" SSG freq' : 173.950MHz						Adjust for maximum SINAD.	
3. Squelch	1) Set test mode Select "nL SQL" in tuning mode. SSG freq' : 146.050MHz SSG output : Sensitivity value of 12dB SINAD. SSG MOD : 1.5kHz (Narrow)						Squelch must be closed once. Then adjust for squelch open point.	
	2) "nC SQL" SSG freq' : 160.050MHz							
	3) "nH SQL" SSG freq' : 173.950MHz							
	4) "sL SQL", "sC SQL", "sH SQL" SSG freq' : Same as narrow adjustment. SSG output : Sensitivity value of 12dB SINAD. SSG MOD : 2.4kHz (Semi-wide)							
	5) "wL SQL", "wC SQL", "wH SQL" SSG freq' : Same as narrow adjustment. SSG output : Sensitivity value of 12dB SINAD. SSG MOD : 3.0kHz (Wide)							
4. RSSI (Low)	1) Set test mode Select "nL LRSI" in tuning mode. SSG freq' : 146.050MHz SSG output : Sensitivity value of 12dB SINAD. SSG MOD : 1.5kHz (Narrow)						Writing values only.	
	2) "nC LRSI" SSG freq' : 160.050MHz							
	3) "nH LRSI" SSG freq' : 173.950MHz							
	4) "sL LRSI", "sC LRSI", "sH LRSI" SSG freq' : Same as narrow adjustment. SSG output : Sensitivity value of 12dB SINAD. SSG MOD : 2.4kHz (Semi-wide)							
	5) "wL LRSI", "wC LRSI", "wH LRSI" SSG freq' : Same as narrow adjustment. SSG output : Sensitivity value of 12dB SINAD. SSG MOD : 3.0kHz (Wide)							

ADJUSTMENT

Item	Condition	Measurement			Adjustment			Specifications/Remarks
		Test-equipment	Unit	Terminal	Unit	Parts	Method	
5. Squelch (Tight)	1) Set test mode Select "nL SQLT" in tuning mode. SSG freq' : 146.050MHz SSG output : –109dBm SSG MOD : 1.5kHz (Narrow)	SSG AF VTVM Distortion meter Oscilloscope AG	Rear panel	ANT ACC (EXT.SP)			Squelch must be closed once. Then adjust for squelch open point.	
	2) "nC SQLT" SSG freq' : 160.050MHz							
	3) "nH SQLT" SSG freq' : 173.950MHz							
	4) "sL SQLT", "sC SQLT", "sH SQLT" SSG freq' : Same as narrow adjustment. SSG output : –109dBm SSG MOD : 2.4kHz (Semi-wide)							
	5) "wL SQLT", "wC SQLT", "wH SQLT" SSG freq' : Same as narrow adjustment. SSG output : –109dBm SSG MOD : 3.0kHz (Wide)							
6. RSSI (High)	1) Set test mode Select "nL HRSI" in tuning mode. SSG freq' : 146.050MHz SSG output : –70dBm SSG MOD : 1.5kHz (Narrow)						Writing values only.	
	2) "nC HRSI" SSG freq' : 160.050MHz							
	3) "nH HRSI" SSG freq' : 173.950MHz							
	4) "sL HRSI", "sC HRSI", "sH HRSI" SSG freq' : –70dBm SSG output : Sensitivity value of 12dB SINAD. SSG MOD : 2.4kHz (Semi-wide)							
	5) "wL HRSI", "wC HRSI", "wH HRSI" SSG freq' : –70dBm SSG output : Sensitivity value of 12dB SINAD. SSG MOD : 3.0kHz (Wide)							
7. Squelch check	1) Set test mode CH : CH1 - Sig1 SSG freq' : 160.050MHz SSG output : 15dB SINAD level						Check	Squelch must be opened. (Wide/Semi-wide/Narrow)
	2) SSG output : OFF							Squelch must be closed. (Wide/Semi-wide/Narrow)
8. QT check	1) Set test mode CH : CH1 - Sig5 SSG freq' : 160.050MHz SSG MOD INT : 1kHz EXT : 151.4Hz SSG system MOD DEV : ±3.75kHz SSG output : 12dB SINAD level						Check	Squelch must be opened. (Wide/Semi-wide/Narrow)
	2) CH : CH1 - Sig4 CH1 - Sig6 CH1 - Sig7							Squelch must be closed.

ADJUSTMENT

Transmitter Section

Item	Condition	Measurement			Adjustment			Specifications/Remarks
		Test-equipment	Unit	Terminal	Unit	Parts	Method	
1. Frequency	1) Set test mode Select "FREQ" in tuning mode. PTT : ON	Power meter F. counter	Rear panel	ANT			Check	160.100MHz±100Hz
2. Power output	1) Maximum power Set test mode Select "HPOW" in tuning mode. "L HPOW 256" **E** "L HPOW 250" **E3** PTT : ON				TX-RX (A/2)	VR1	27.0W **E** 5.0W **E3**	±0.5W **E** ±0.2W **E3**
3. High power	1) Set test mode Select "HPOW" in tuning mode. "L HPOW" PTT : ON						25.0W **E** 5.0W **E3**	±1.0W **E** ±0.2W **E3**
	2) "L2 HPOW" PTT : ON							
	3) "C HPOW" PTT : ON							
	4) "H2 HPOW" PTT : ON							
	5) "H HPOW" PTT : ON							
4. Low power	1) Set test mode Select "LPOW" in tuning mode. "L LPOW" PTT : ON	Power meter					6.0W **E** 1.0W **E3**	±0.5W **E** ±0.1W **E3**
	2) "L2 LPOW" PTT : ON							
	3) "C LPOW" PTT : ON							
	4) "H2 LPOW" PTT : ON							
	5) "H LPOW" PTT : ON							
5. Power check	1) Set test mode CH : CH1 - Sig1 CH2 - Sig1 CH3 - Sig1 PTT : ON	Power meter Ammeter		ANT DC IN			Check	25W±1W, 8A or less **E** 5W±0.2W, 5A or less **E3**
6. Modulation balance	1) Set test mode MIC input : OFF Select "BAL" in tuning mode. "nL BAL" Deviation meter filter LPF : 15kHz HPF : OFF De-emphasis : OFF	Power meter Deviation meter Oscilloscope AF VTVM AG	Rear panel Front panel	ANT MIC			Make the de-modulation waveform near.	(Wide/Semi-wide/Narrow) 
	2) "nC BAL" PTT : ON							
	3) "nH BAL" PTT : ON							
	4) "s BAL" PTT : ON							
	5) "w BAL" PTT : ON							

ADJUSTMENT

Item	Condition	Measurement			Adjustment			Specifications/Remarks
		Test-equipment	Unit	Terminal	Unit	Parts	Method	
7. Maximum deviation	1) Set test mode Connect AG to the MIC terminal. Select "MAX" in tuning mode. "nL MAX" AG : 1kHz/40mV Deviation meter filter LPF : 15kHz HPF : OFF De-emphasis : OFF PTT : ON	Power meter Deviation meter Oscilloscope AF VTVM AG	Rear panel Front panel	ANT MIC			4.1kHz (Wide) 3.3kHz (Semi-wide) 2.05kHz (Narrow) (According to the larger +, –)	+0Hz/–50Hz (Wide/Semi-wide/Narrow)
	2) "nC MAX" PTT : ON							
	3) "nH MAX" PTT : ON							
	4) "s MAX" PTT : ON							
	5) "w MAX" PTT : ON							
8. MIC seisitivity check	1) Set test mode CH : CH1 - Sig1 AG : 1kHz/4mV PTT : ON						Check	±3kHz±0.2kHz (Wide) ±2.4kHz±0.1kHz (Semi-wide) ±1.5kHz±0.05kHz (Narrow)
9. QT deviation	1) Set test mode Select "QT" in tuning mode. "nL QT" Deviation meter filter LPF : 3kHz HPF : OFF PTT : ON						0.75kHz (Wide) 0.60kHz (Semi-wide) 0.35kHz (Narrow)	±50Hz (Wide/Semi-wide/Narrow)
	2) "nC QT" PTT : ON							
	3) "nH QT" PTT : ON							
	4) "s QT" PTT : ON							
	5) "w QT" PTT : ON							
10. DQT deviation	1) Set test mode Select "DQT" in tuning mode. "nL DQT" Deviation meter filter LPF : 3kHz HPF : OFF PTT : ON						0.75kHz (Wide) 0.60kHz (Semi-wide) 0.35kHz (Narrow)	±50Hz (Wide/Semi-wide/Narrow)
	2) "nC DQT" PTT : ON							
	3) "nH DQT" PTT : ON							
	4) "s DQT" PTT : ON							
	5) "w DQT" PTT : ON							

ADJUSTMENT

Item	Condition	Measurement			Adjustment			Specifications/Remarks
		Test-equipment	Unit	Terminal	Unit	Parts	Method	
11. DTMF deviation	1) Set test mode Select "n DTMF" in tuning mode. Deviation meter filter LPF : 15kHz HPF : OFF PTT : ON	Power meter Deviation meter Oscilloscope AF VTVM AG	Rear panel Front panel	ANT MIC			3.0kHz (Wide) 2.4kHz (Semi-wide) 1.5kHz (Narrow)	±0.2kHz (Wide/Semi-wide) ±0.1kHz (Narrow)
	2) "s DTMF" PTT : ON							
	3) "w DTMF" PTT : ON							
12. FFSK deviation	1) Set test mode Select "n FFSK" in tuning mode. Deviation meter filter LPF : 15kHz HPF : OFF PTT : ON						3.0kHz (Wide) 2.4kHz (Semi-wide) 1.5kHz (Narrow)	±0.1kHz (Wide/Semi-wide/Narrow)
	2) "s FFSK" PTT : ON							
	3) "w FFSK" PTT : ON							
13. TONE deviation	1) Set test mode Select "n TONE" in tuning mode. Deviation meter filter LPF : 15kHz HPF : OFF PTT : ON						3.0kHz (Wide) 2.4kHz (Semi-wide) 1.5kHz (Narrow)	±0.1kHz (Wide/Semi-wide/Narrow)
	2) "s TONE" PTT : ON							
	3) "w TONE" PTT : ON							

TK-780 PC BOARD VIEWS

PLL/VCO (X58-4712-70) Component side view (J72-0732-02)

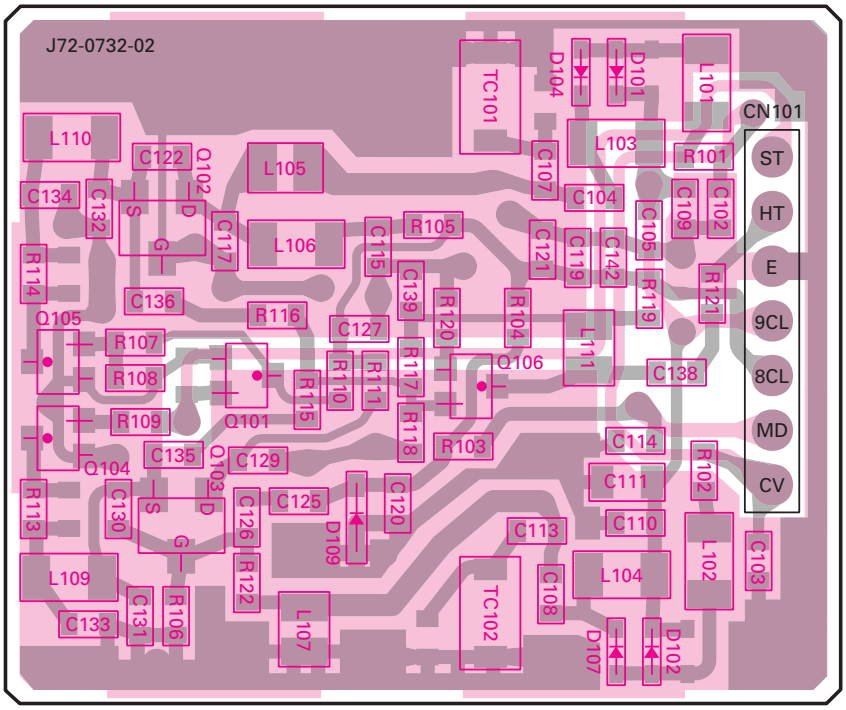

SUB UNIT (X58-4850-10) : E3 Component side view (J72-0785-02)

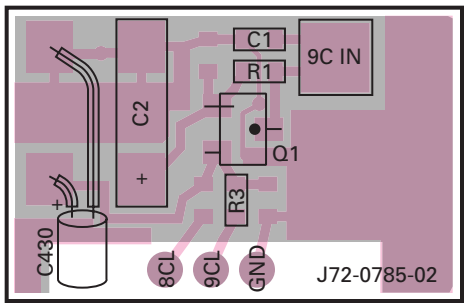

PLL/VCO (X58-4712-70) Foil side view (J72-0732-02)

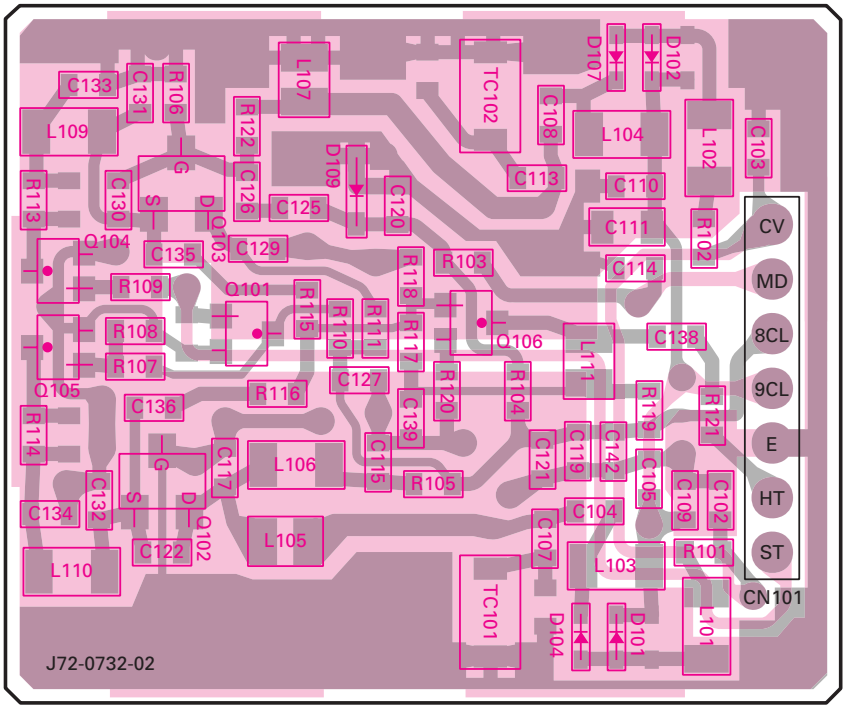

Component side
Foil side

TK-780 PC BOARD VIEW

TX-RX UNIT (X57-6142-XX) (A/2) -70 : E -72 : E3
Component side view (J72-0724-22 A/2)

Ref. No.	Address	Ref. No.	Address	Ref. No.	Address	Ref. No.	Address	Ref. No.	Address
IC5	10M	Q4	11R	Q19	4O	Q403	10O	D32	4Q
IC10	8R	Q5	10R	Q21	7F	D7	10R	D37	5P
IC11	12J	Q6	10S	Q32	11J	D8	13L	D206	9B
IC14	6O	Q8	8O	Q300	9F	D9	12M	D207	10B
IC202	13E	Q10	7N	Q301	11G	D11	9M	D208	11B
IC300	10H	Q13	7M	Q302	11F	D12	12M	D213	7D
IC400	2I	Q16	11J	Q401	7G	D13	13M		
IC401	7F	Q17	6G	Q402	10O	D14	12N		

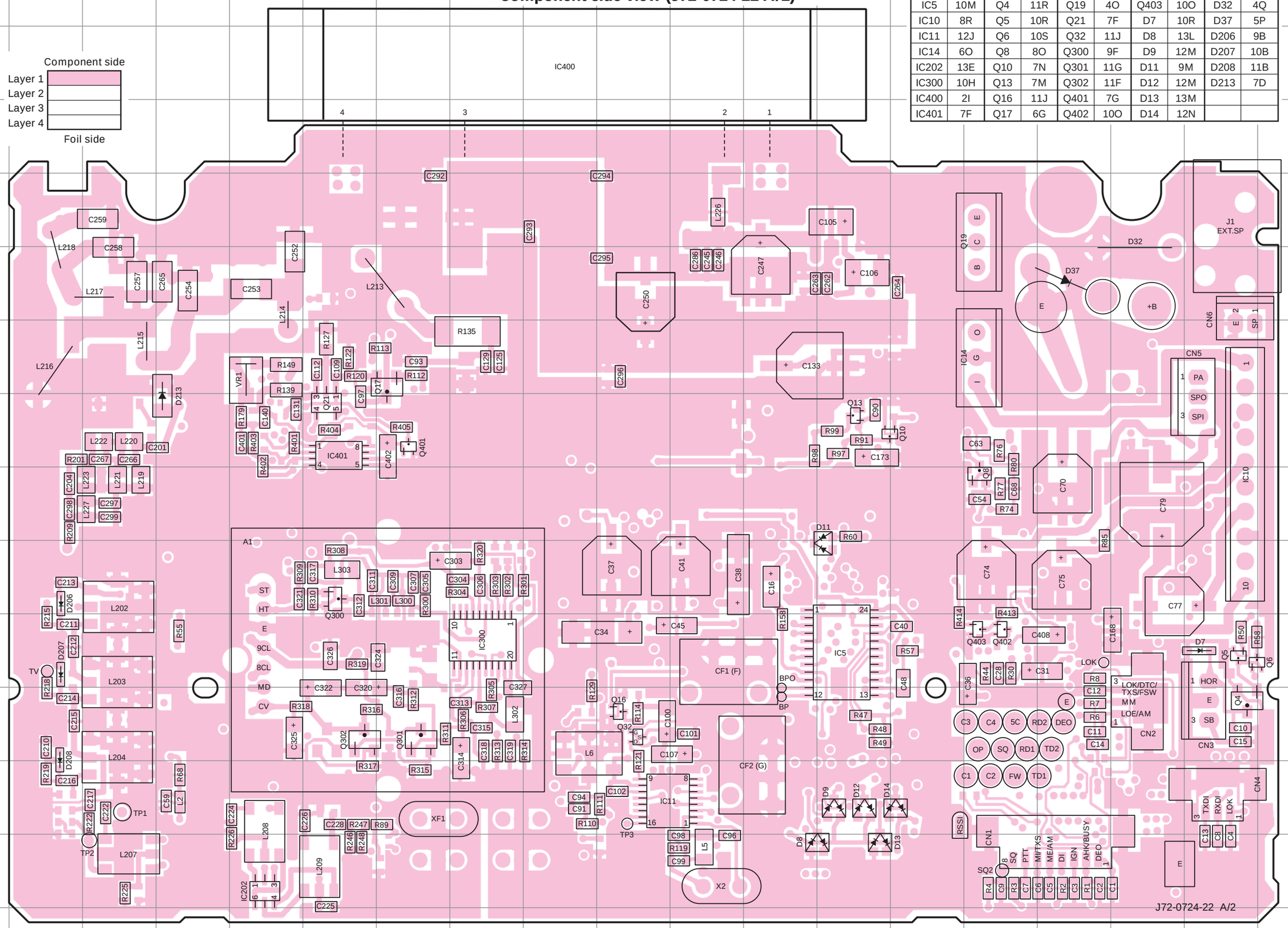

PC BOARD VIEW TK-780

TX-RX UNIT (X57-6142-XX) (A/2) -70 : E -72 : E3
Foil side view (J72-0724-22 A/2)

Ref. No.	Address	Ref. No.	Address	Ref. No.	Address	Ref. No.	Address	Ref. No.	Address	Ref. No.	Address	Ref. No.	Address
IC1	9M	IC13	6G	Q11	7G	Q26	10C	D1	13D	D20	8C	D31	8C
IC2	13G	IC15	9C	Q12	7H	Q27	7D	D2	13C	D21	8B	D34	8C
IC3	10E	IC201	6M	Q15	12K	Q28	7D	D3	13C	D22	11I	D35	12F
IC4	9E	IC400	2K	Q18	11J	Q29	6N	D4	13D	D23	11H	D209	7L
IC6	6M	Q1	8E	Q20	5G	Q30	8D	D5	13E	D24	7E	D210	7J
IC7	9G	Q2	9J	Q22	9C	Q31	8C	D6	12C	D26	9B	D211	5N
IC8	10G	Q3	9I	Q23	10J	Q202	9Q	D15	11N	D27	7Q	D212	6O
IC9	8D	Q7	10N	Q24	10J	Q203	7L	D16	7B	D28	8B		
IC12	9H	Q9	8B	Q25	9C	Q204	7J	D17	13D	D30	6R		

Component side
Layer 1
Layer 2
Layer 3
Layer 4
Foil side

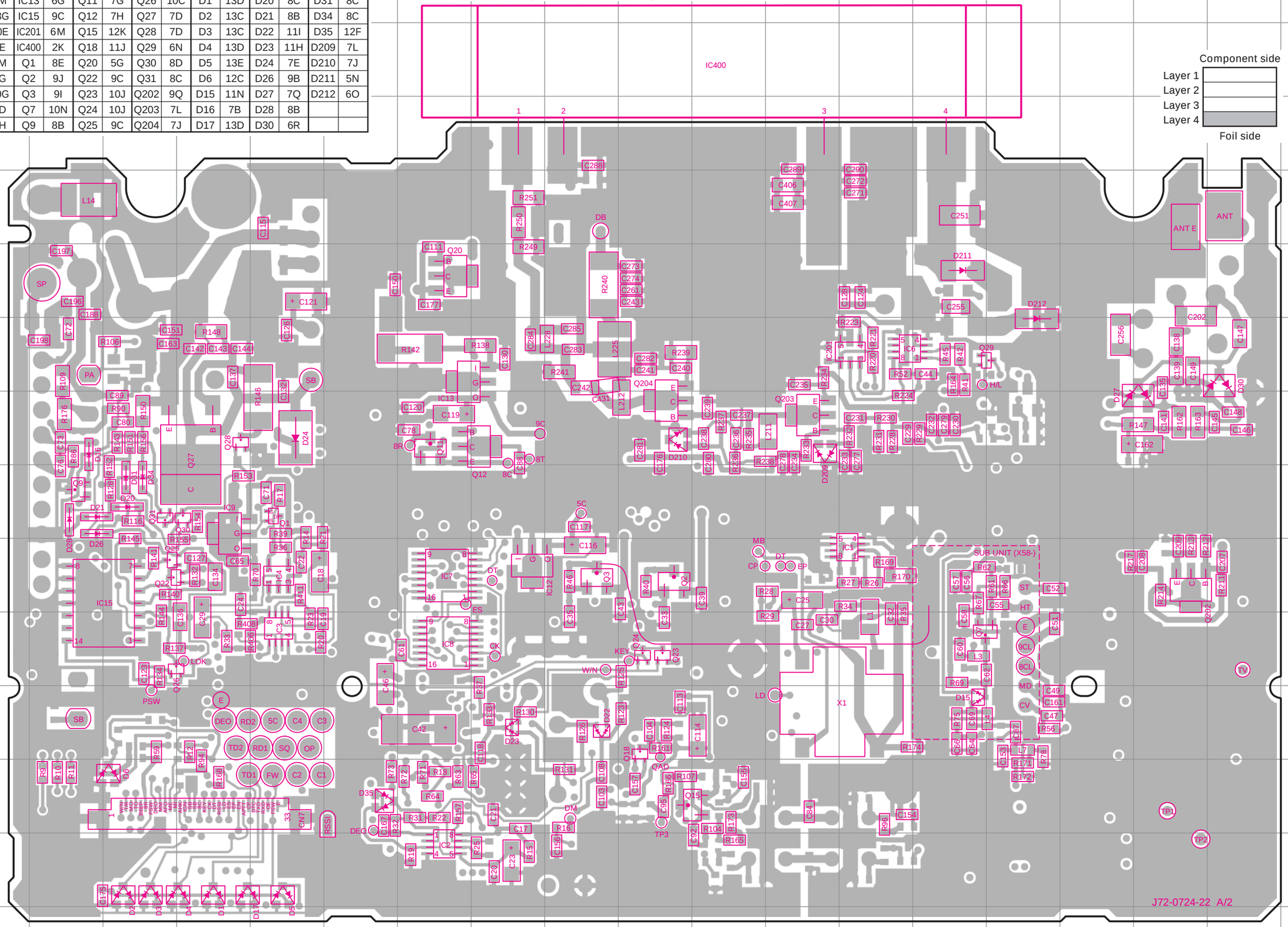

TK-780 PC BOARD VIEW

TX-RX UNIT (X57-6142-XX) (A/2) -70 : E -72 : E3
Component side view + Foil side (J72-0724-22 A/2)

Component side
Layer 1
Layer 2
Layer 3
Layer 4
Foil side

● Connect 1 and 4

Ref. No.	Address	Ref. No.	Address	Ref. No.	Address	Ref. No.	Address	Ref. No.	Address	Ref. No.	Address	Ref. No.	Address	Ref. No.	Address
IC1	9G	IC13	6M	Q5	10R	Q18	11J	Q30	8P	D1	13P	D14	12N	D30	6B
IC2	13M	IC14	6O	Q6	10S	Q19	4O	Q31	8Q	D2	13Q	D15	11F	D31	8Q
IC3	10O	IC15	9Q	Q7	10F	Q20	5M	Q32	11J	D3	13Q	D16	7R	D32	4Q
IC4	9O	IC201	6G	Q8	8O	Q21	7F	Q202	9C	D4	13P	D17	13P	D34	8Q
IC5	10M	IC202	13E	Q9	8R	Q22	9Q	Q203	7H	D5	13O	D20	8Q	D35	12N
IC6	6G	IC300	10H	Q10	7N	Q23	10J	Q204	7J	D6	12Q	D21	8R	D37	5P
IC7	9M	IC400	2I	Q11	7M	Q24	10J	Q300	9F	D7	10R	D22	11K	D206	9B
IC8	10M	IC401	7F	Q12	7L	Q25	9Q	Q301	11G	D8	13L	D23	11L	D207	10B
IC9	8P	Q1	8O	Q13	7M	Q26	10Q	Q302	11F	D9	12M	D24	7O	D208	11B
IC10	8R	Q2	9J	Q15	12I	Q27	7P	Q401	7G	D11	9M	D26	8R	D209	7H
IC11	12J	Q3	9K	Q16	11J	Q28	7P	Q402	10O	D12	12M	D27	7C	D210	7J
IC12	9L	Q4	11R	Q17	6G	Q29	6E	Q403	10O	D13	13M	D28	8R	D211	5F
														D212	6E
														D213	7D

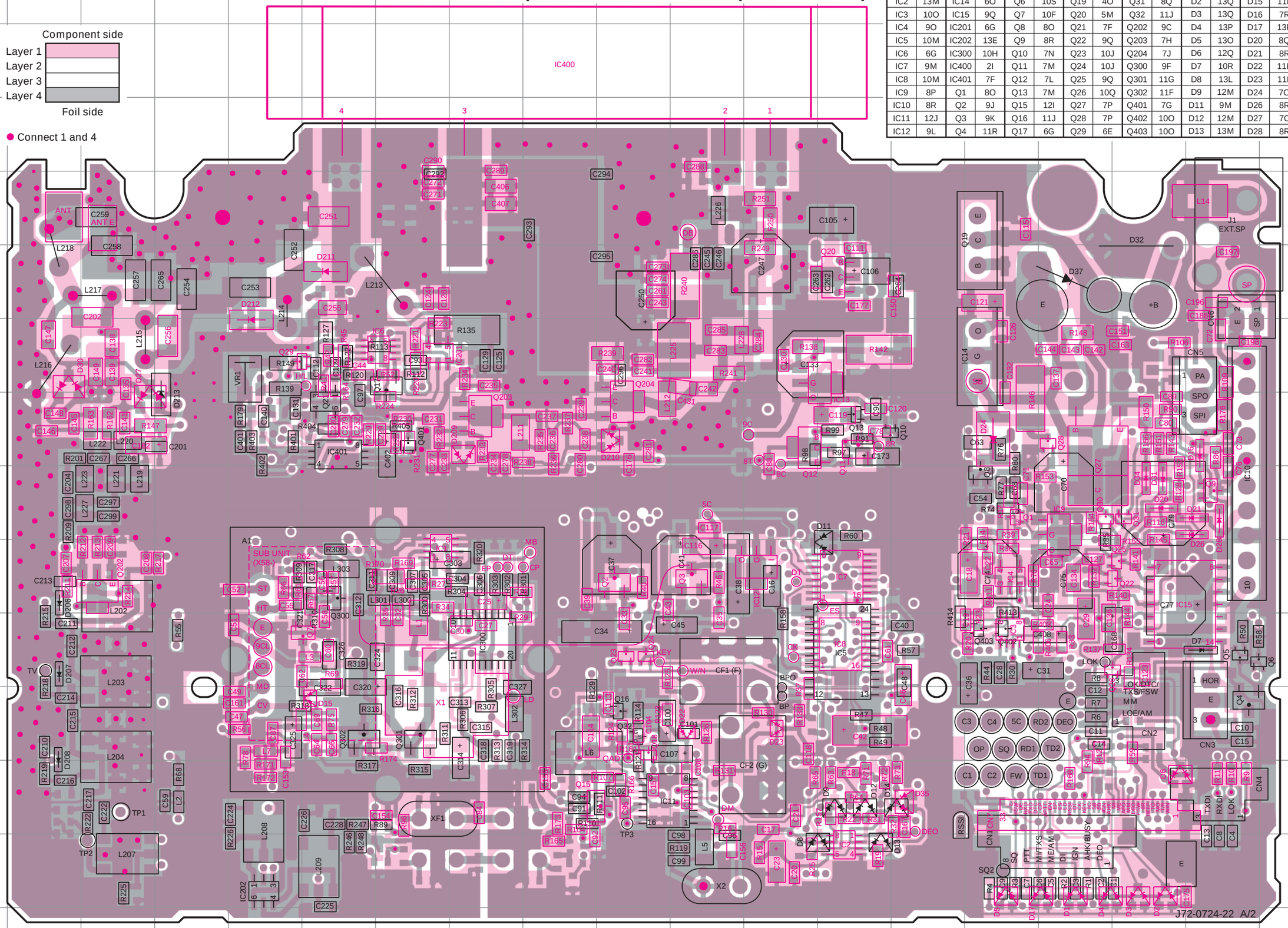

TX-RX UNIT (X57-6142-XX) (B/2) -70 : E -72 : E3 Component side view (J72-0724-22 B/2)

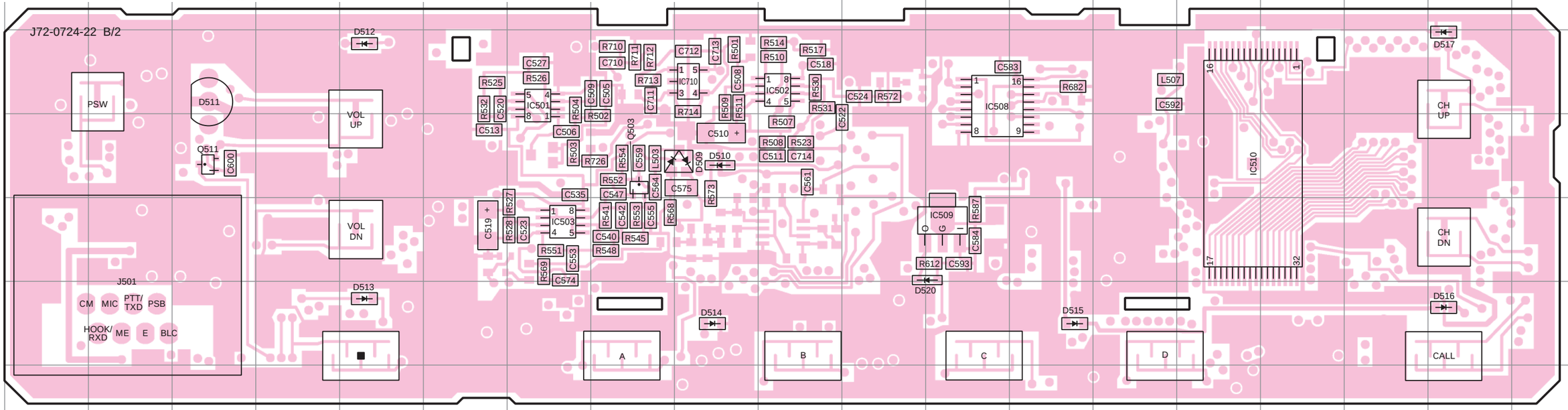

Ref. No.	Address	Ref. No.	Address	Ref. No.	Address	Ref. No.	Address	Ref. No.	Address	Ref. No.	Address	Ref. No.	Address
IC501	2G	IC508	2L	IC710	2I	D509	3I	D512	2E	D515	5M	D520	4L
IC502	2J	IC509	4L	Q503	3H	D510	3I	D513	5E	D516	5R		
IC503	4G	IC510	3O	Q511	3C	D511	2C	D514	5I	D517	2R		

Component side
Layer 1
Layer 2
Layer 3
Layer 4
Foil side

TX-RX UNIT (X57-6142-XX) (B/2) -70 : E -72 : E3 Foil side view (J72-0724-22 B/2)

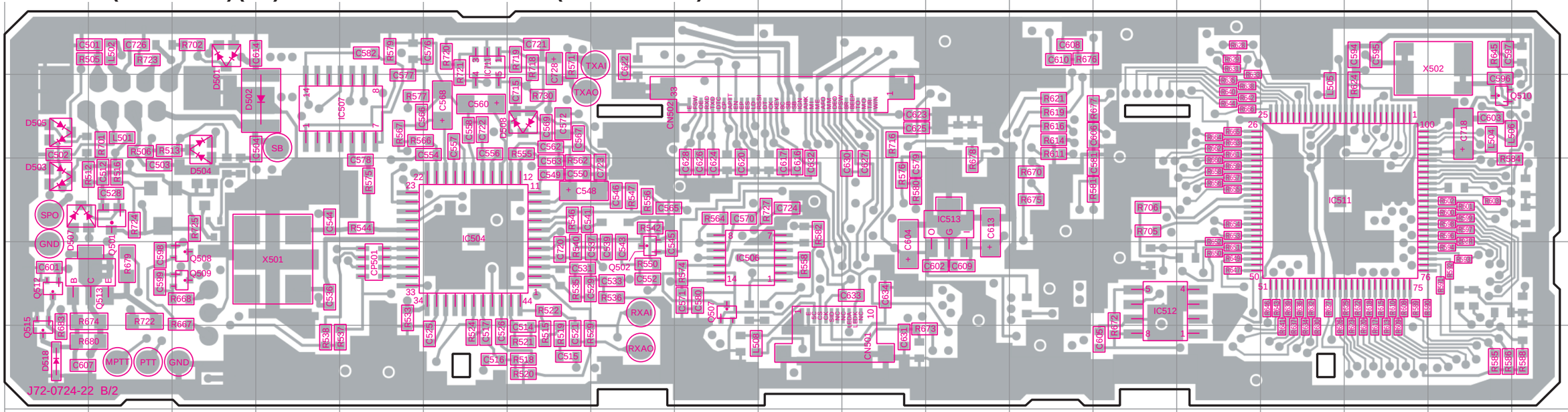

Ref. No.	Address	Ref. No.	Address	Ref. No.	Address	Ref. No.	Address	Ref. No.	Address	Ref. No.	Address	Ref. No.	Address	Ref. No.	Address	Ref. No.	Address
IC504	10F	IC511	10P	IC711	7F	Q507	11I	Q510	9R	Q515	12A	D503	10A	D507	10A		
IC506	11I	IC512	11N	Q501	10B	Q508	11C	Q512	11A	D501	8C	D504	9C	D508	9G		
IC507	9E	IC513	10L	Q502	11H	Q509	11C	Q513	11B	D502	9D	D505	9A	D518	12A		

Component side
Layer 1
Layer 2
Layer 3
Layer 4
Foil side

TK-780 PC BOARD VIEW

TX-RX UNIT (X57-6142-XX) (B/2) -70 : E -72 : E3 Component side view + Foil side (J72-0724-22 B/2)

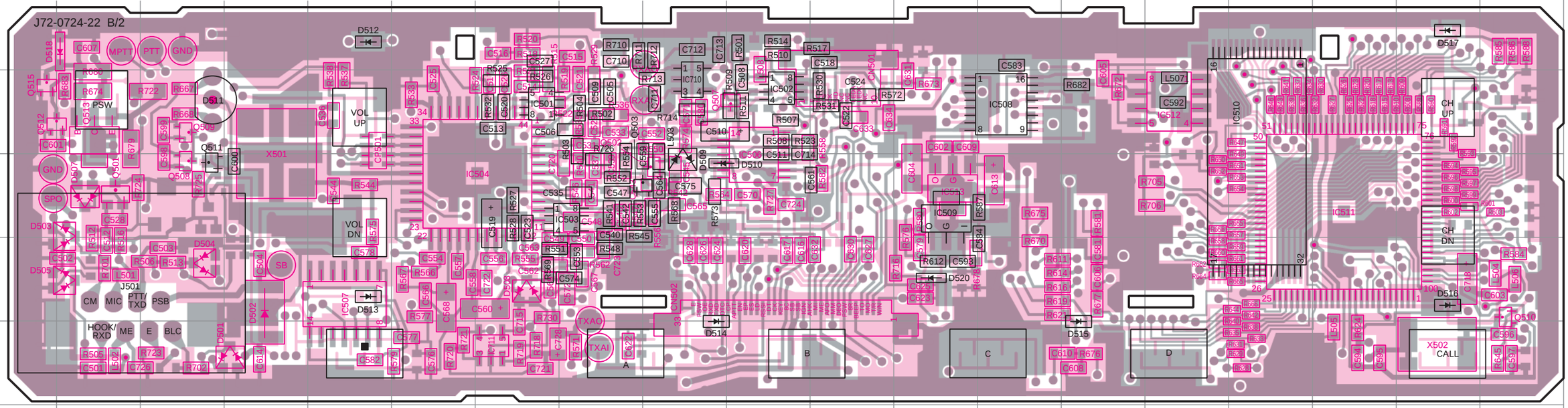

Ref. No.	Address	Ref. No.	Address	Ref. No.	Address	Ref. No.	Address	Ref. No.	Address	Ref. No.	Address	Ref. No.	Address
IC501	3G	IC509	4L	Q501	4B	Q511	4C	D504	5C	D512	2E	D520	5L
IC502	3J	IC510	3P	Q502	4I	Q512	3A	D505	5B	D513	5E		
IC503	4H	IC511	4Q	Q503	4H	Q513	3B	D507	4B	D514	6I		
IC504	4G	IC512	3O	Q507	3J	Q515	3A	D508	5G	D515	6N		
IC506	4J	IC513	4L	Q508	4C	D501	6D	D509	4I	D516	5R		
IC507	5E	IC710	3I	Q509	3C	D502	5D	D510	4J	D517	2R		
IC508	3M	IC711	6G	Q510	5S	D503	4B	D511	3C	D518	2B		

Component side
Layer 1
Layer 2
Layer 3
Layer 4
Foil side

● Connect 1 and 4

DTA114EE
DTA144WE
DTC114EE
DTC144EE
DTD114EK
2SA1362
2SC2059K
2SC2412K

2SC3722K
2SC4215
2SC4617
2SC4619

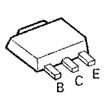

2SB1132
2SB1188
2SC2954
2SC3357

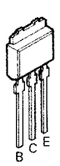

2SA1641

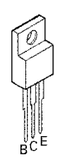

2SD2394

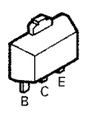

2SC2873

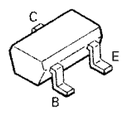

2SC4081

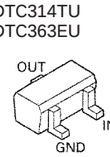

DTC314TU
DTC363EU

DTC114EUA

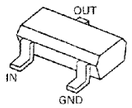

2SK508NV

2SK1824

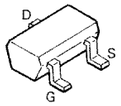

DA204U
DTA114YUA
HSM88AS

DAN202U

MA742

FMW1

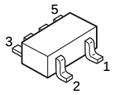

TA78L05F

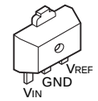

AN8009M

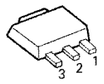

TA7808S

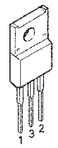

RH5VL42C

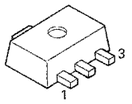

TC4S66F

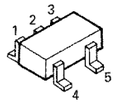

LMC7101BIM5

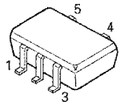

TA75S01F

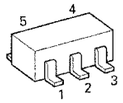

M67741H-32

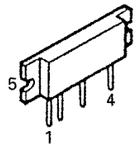

GN2011

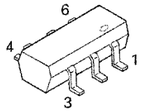

TA75W558FU

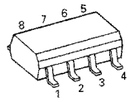

TA75W01FU
TC75W51FU

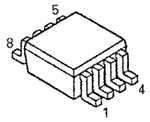

AT2416N10SI2.5

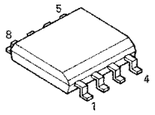

NJM2094V

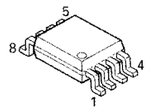

W29C020C90

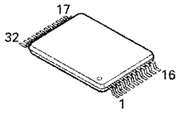

LA4422

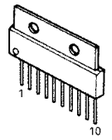

TC4013BF

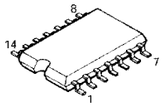

BU4066BCFV

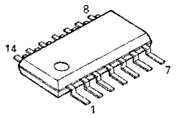

LC73872M

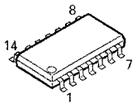

BU4094BCFV

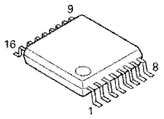

TA31136FN

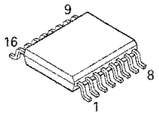

SA7025DK

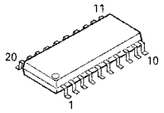

M62363FP

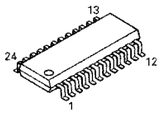

AT29C020-90TI

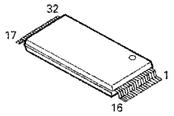

TC35453F

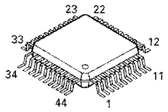

30620M8A-2K9GP

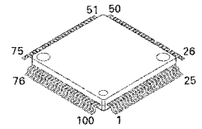

SCHEMATIC DIAGRAM TK-780

Note : Components marked with a dot (·) are parts of layer 1.

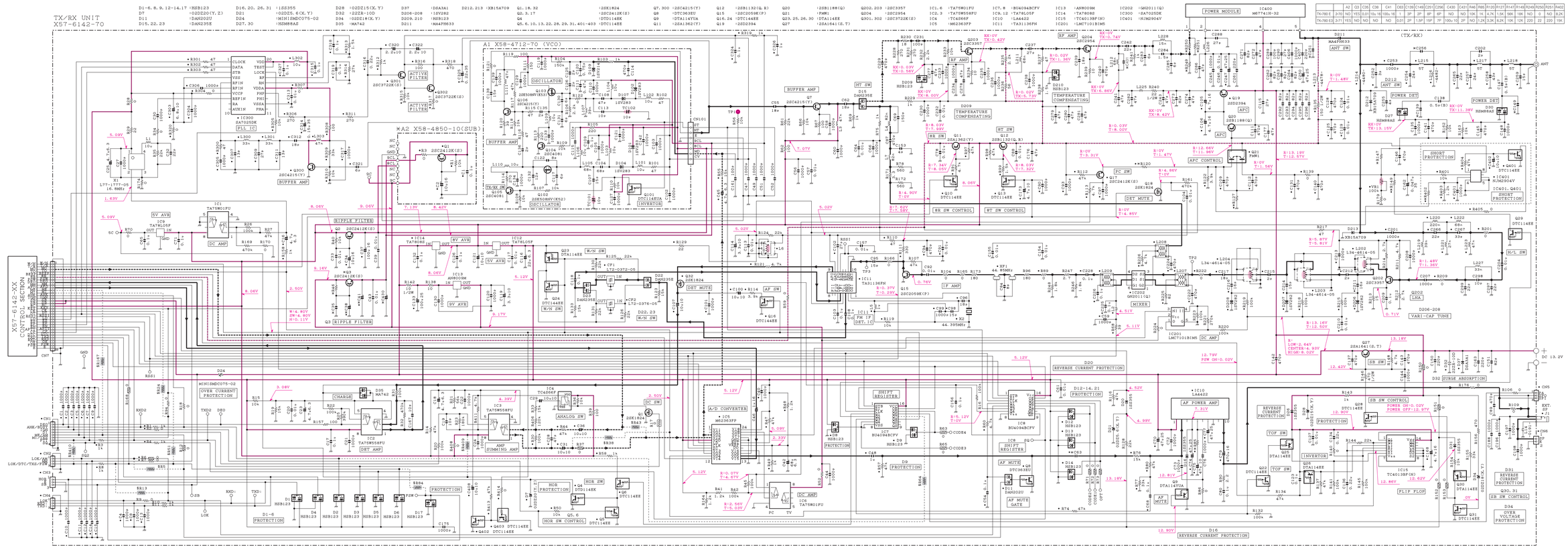

TK-780 SCHEMATIC DIAGRAM

Note : Components marked with a dot (·) are parts of layer 1.

X57-6142-XX **CONTROL SECTION**

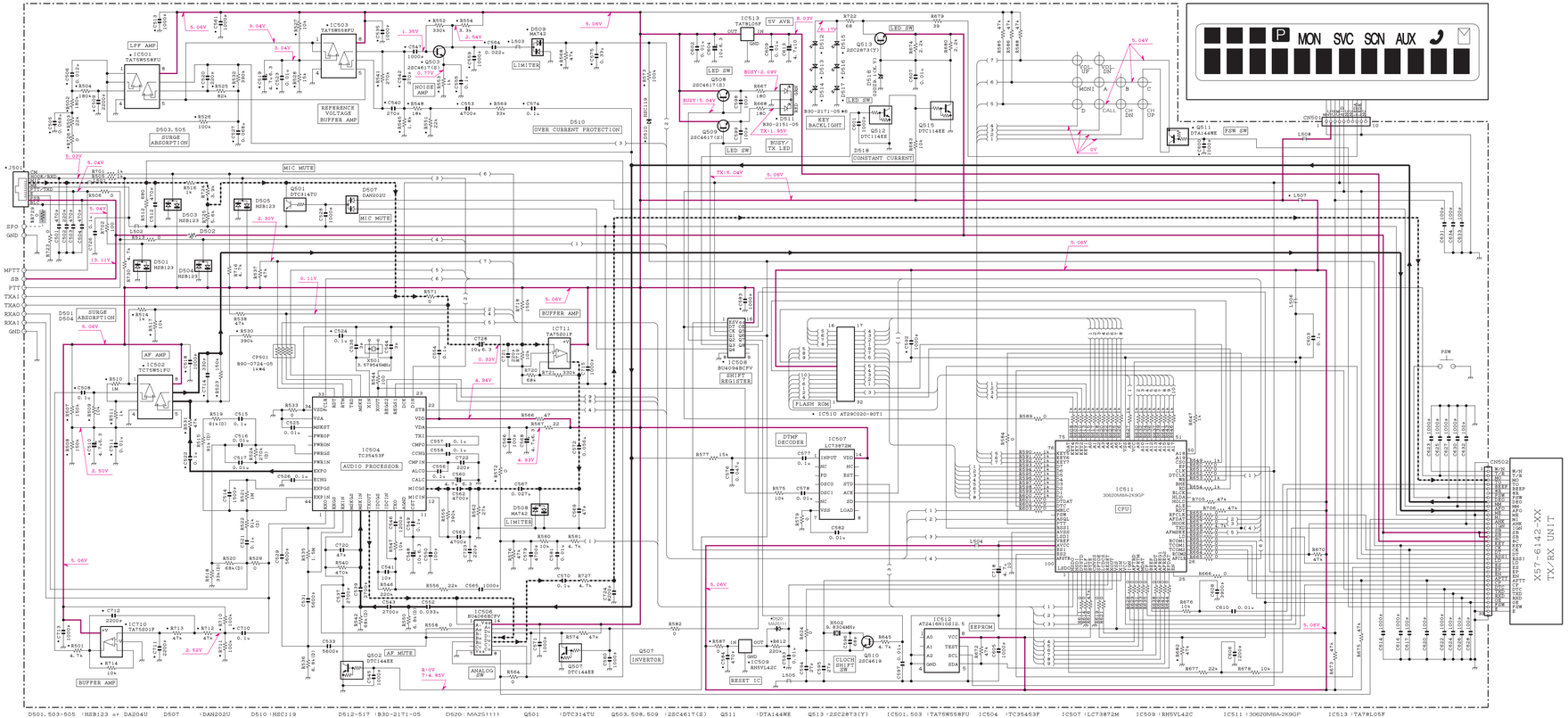

D501,503~505 :HSB123 or DA204U
D502 :MINI8MDC075-02
D507 :DAN202U
D508,509 :MA742
D510 :HSC119
D511 :B30-2151-05
D512~517 :B30-2171-05
D518 :02DZ9.1(X,Y)
D520 :MAZS111
Q501 :DTC314TU
Q502,507 :DTC144EE
Q503,508,509 :2SC4617(G)
Q510 :2SC4619
Q511 :DTA144WE
Q512,515 :DTC114EE
Q513 :2SC2873(Y)
IC501,503 :TA75W558FU
:TC75W51FU
IC502 :
IC504 :TC35453F
IC506 :BU4066BCFV
IC507 :LC73872M
IC508 :BU4094BCFV
IC509 :RH5VL42C
IC510 :AT29C020-90TI
IC511 :30620MBA-2K3GP
IC512 :AT24C16N10SI2.5
IC513 :TA78L05F
IC710,711 :TA75S01F

BLOCK DIAGRAM

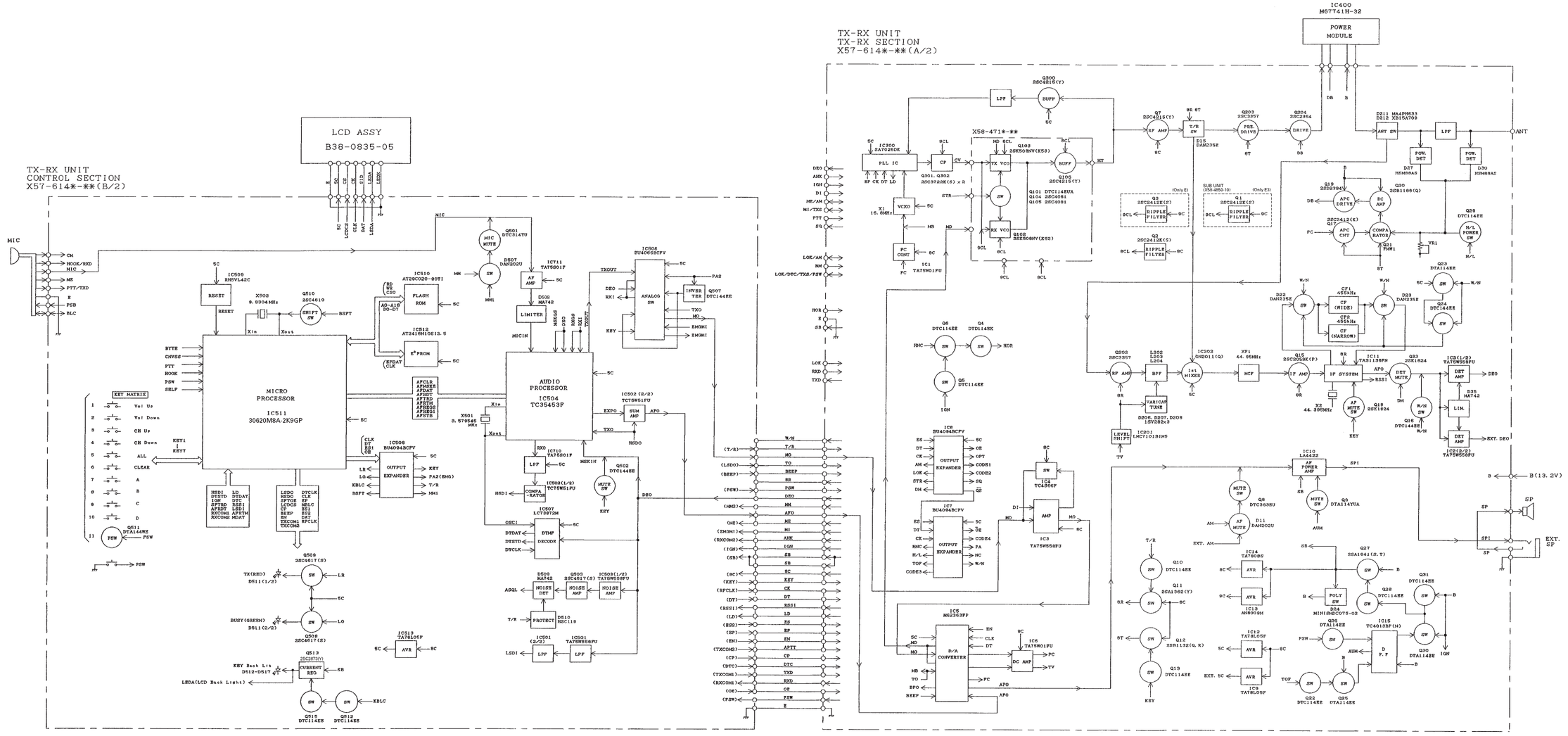

LEVEL DIAGRAM

Receiver Section

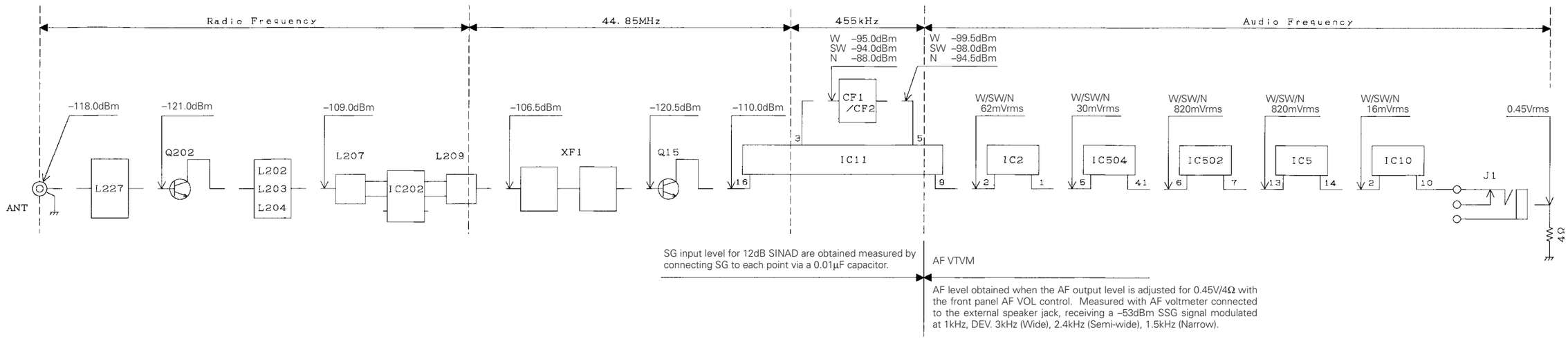

Transmitter Section

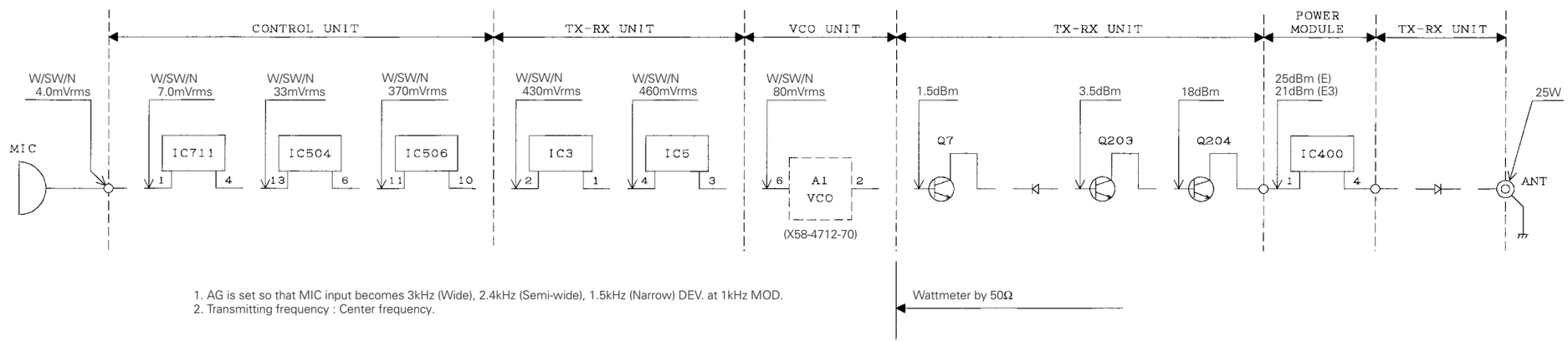

1. AG is set so that MIC input becomes 3kHz (Wide), 2.4kHz (Semi-wide), 1.5kHz (Narrow) DEV. at 1kHz MOD.
2. Transmitting frequency : Center frequency.

TERMINAL FUNCTION

CN7 (TX-RX Unit A/2) ⟷ CN502 (TX-RX Unit B/2)

Pin No.	Name	Function
1	W/N	Wide/Narrow. H : Wide
2	T/R	TX/RX switch. H : Receive
3	MO	Modulation signal.
4	TO	Low speed data signal.
5	BEEP	Beep.
6	8R	NC
7	PSW	Power switch.
8	DEO	Receive signal to control unit.
9	MM	MIC mute. H : MIC mute
10	AFO	Receive signal from control unit.
11	ME	MIC ground.
12	MI	External MIC.
13	AHK	Hook signal. H : Off hook
14	IGN	Ignition signal.
15	SB	13.2V.
16	SB	13.2V.
17	8C	8V.
18	KEY	TX signal.
19	CK	Shift register clock.
20	DT	PLL/Shift register/DA converter data.
21	RSSI	RSSI.
22	LD	PLL unlock detection.
23	ES	Shift register enable.
24	EP	PLL enable.
25	EN	DA converter enable.
26	APTT	External PTT.
27	CP	PLL clock.
28	DTC	Data control.
29	TXD	Serial data.
30	RXD	Serial data.
31	OE	Serial data.
32	FSW	Foot switch.
33	E	Ground.

CN101 (VCO) ⟷ TX-RX Unit A/2

Pin No.	Name	Function
1	ST	Switched transmit input. H : Transmit
2	HT	RF output.
3	E	Ground.
4	9CL	9V input.
5	8CL	8V input.
6	MD	Modulation input.
7	CV	Control voltage input.

CN501 (TX-RX Unit B/2)

Pin No.	Name	Function
1	E	Ground.
2	5C	Logic power (5V).
3	CS	Chip selector signal. L : Option
4	CK	Serial clock signal.
5	SID	Serial data input.
6	(NC)	Unused terminal.
7	(NC)	Unused terminal.
8	LED(A)	LED anode terminal.
9	LED(K)	LED cathode terminal.
10	NC	Unused terminal.

J501 (TX-RX Unit B/2)

Pin No.	Name	Function
1	BLC	MIC key backlight control.
2	PSB	13.2V.
3	E	Ground.
4	PTT/TXD	PTT.
5	ME	MIC ground.
6	MIC	MIC signal input.
7	HOOK/RXD	Hook detection
8	CM	MIC data detection.

SPECIFICATIONS

GENERAL

Frequency Range	146 to 174MHz
Number of Channels	Maximum 250 channels
Channel Spacing	Narrow : 12.5kHz Wide 4k : 20kHz Wide 5k : 25kHz
Input Voltage	13.2V DC negative ground
Current Drain	0.4A on standby
	1.0A on receive
	E : 8A on transmit E3 : 5A on transmit
Temperature Range	–30°C to +60°C
Frequency Stability	±2.5ppm
Dimensions & Weight	140 W x 40 H x 145 D mm, 0.94kg

RECEIVER (Measurements made per ETS standard)

RF Input Impedance	50Ω
Sensitivity (EIA 12dB SINAD)	0.25µV
Selectivity	Wide : 80dB Narrow : 70dB
Intermodulation	70dB
Spurious and Image Rejection	80dB
Audio Power Output	4W at 4Ω less than 10% distortion
Channel Frequency Spread	28MHz

TRANSMITTER (Measurements made per ETS standard)

RF Power Output	E : 5 to 25W E3 : 1 to 5W
Spurious Emission	≤ 1GHz : Less than –36dBm > 1GHz : Less than –30dBm
Modulation Limitting	Narrow : ±2.5kHz Wide 4k : ±4kHz Wide 5k : ±5kHz
FM Noise (EIA)	Wide : 50dB Narrow : 45dB
Microphone Impedance	600Ω
Audio Distortion	Less than 3%
Channel Frequency Spread	28MHz

TK-780

KENWOOD CORPORATION
14-6, Dogenzaka 1-chome, Shibuya-ku, Tokyo 150-8501, Japan

KENWOOD SERVICE CORPORATION
P.O. BOX 22745, 2201 East Dominguez Street, Long Beach, CA 90801-5745, U.S.A.

KENWOOD ELECTRONICS CANADA INC.
6070 Kestrel Road, Mississauga, Ontario, Canada L5T 1S8

KENWOOD ELECTRONICS DEUTSCHLAND GMBH
Rembrücker Str. 15, 63150 Heusenstamm, Germany

KENWOOD ELECTRONICS BELGIUM N.V.
Leuvensesteenweg 248 J, 1800 Vilvoorde, Belgium

KENWOOD ELECTRONICS FRANCE S.A.
13, Boulevard Ney, 75018 Paris, France

KENWOOD ELECTRONICS U.K. LIMITED
KENWOOD House, Dwight Road, Watford, Herts., WD1 8EB United Kingdom

KENWOOD ELECTRONICS EUROPE B.V.
Amsterdamseweg 37, 1422 AC Uithoorn, The Netherlands

KENWOOD ELECTRONICS ITALIA S.p.A.
Via G. Sirtori, 7/9 20129 Milano, Italy

KENWOOD IBERICA S.A.
Bolivia, 239-08020 Barcelona, Spain

KENWOOD ELECTRONICS AUSTRALIA PTY. LTD.
(A.C.N. 001 499 074)
16 Giffnock Avenue, Centrecourt Estate, North Ryde, N.S.W. 2113 Australia

KENWOOD ELECTRONICS (HONG KONG) LTD.
Unit 3712-3724, Level 37, Tower one Metroplaza, 223 Hing Fong Road, Kwai Fong, N.T., Hong Kong

KENWOOD ELECTRONICS TECHNOLOGIES(S) PTE LTD.
Sales Marketing Division
1 Ang Mo Kio Street 63, Singapore 569110

100%